IN1-49018
2-05

INSTALLATION INSTRUCTIONS
FOR
BED RAIL CAPS, TAIL GATE CAP

TOOLS REQUIRED FOR INSTALLATION:

- Clean Cloth
- Rubbing Alcohol
- #2 Phillips Screw Driver

IMPORTANT: READ BEFORE BEGINNING INSTALLATION

Verifying Fit - Caps should be held to the vehicle surface to verify correct type and fit BEFORE beginning installation or painting. Small fit adjustments can be made by trimming (filing, sanding or scraping) excess plastic.

Ambient Temperature – During installation: the vehicle, the bed rail and/or tail gate caps, and the tape needs to be between 60° and 110°F for proper adhesion. Failure to maintain proper installation temperature may result in the part not functioning correctly

INSTALLATION PROCEDURES

Step 1: Painting

(A) **I**t is recommended that painting (when desired) be done prior to installation.
(B) Sand (optional) before application of paint.
(C) Clean outer surface with a good grade degreaser. DO NOT USE LACQUER THINNER OR ENAMEL REDUCER AS A DEGREASER. Wipe outer surface thoroughly with a tack rag prior to painting.
(D) Paint caps using a high quality lacquer, enamel, or polyurethane automotive paint. Application of a primer coat is optional.

Step 2: Preparing the Work Area

(A) Clean the area of installation with a cloth and rubbing alcohol or prep-solvent to remove any car wax or dirt from the vehicle surface.
(B) Make sure the surface of vehicle is above 60º if not increase surface temperature using a heat gun or suitable device (Hair Dryer) to help reach temperature. The warmer the surface the better the bond.

Step 3: Part Installation (See Illustration)

(A) Bed rail cap installation.
1. Peel the red vinyl backing away from the pieces of tape on the inside of the bed rail cap.
2. Position the bed rail cap snugly at the tail end of the bed rail.
3. Carefully lay the part down on the bed rail, aligning the stake pocket holes in the part with the stake pockets in the truck if

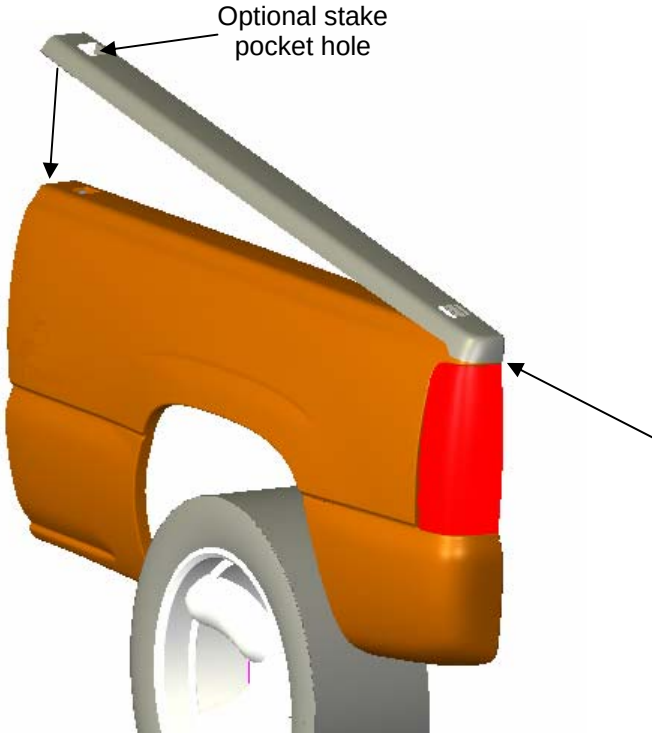

applicable, and apply 30 lbs. of pressure per square inch to the taped areas for proper bond.

4. Wait an hour making sure the vehicle maintains a temperature over 60º and apply 30 lbs. of pressure per square inch to the taped areas **again** for proper adhesion to the vehicle. NOTE: the tape reaches maximum adhesive bond after 24 hours of contact.
5. Slide a SURE-LOK™ bed rail clip (patent pending) onto the bed rail in the areas where there is bump on the inside edge of the bed rail cap.

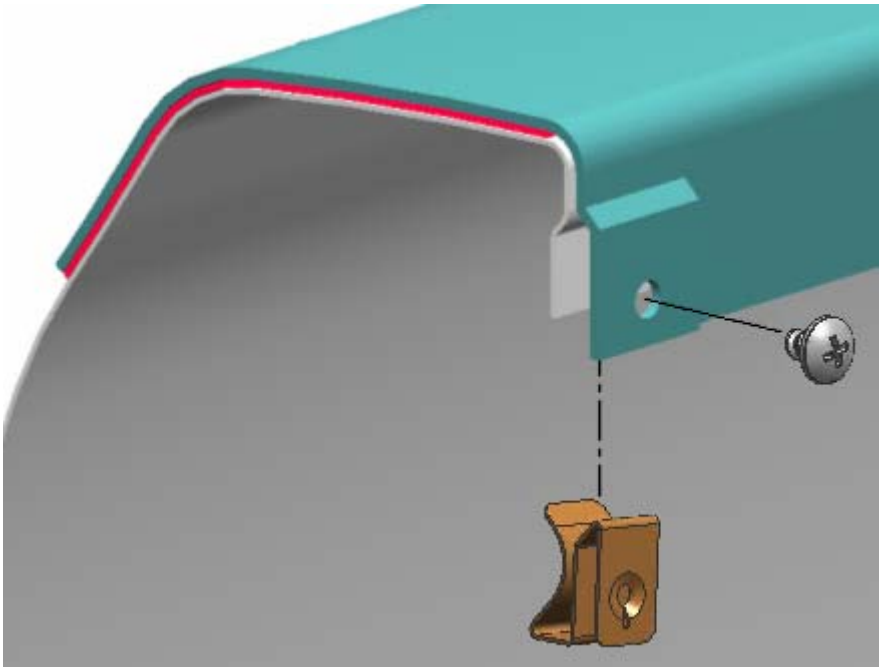

6. Fasten the bed rail cap to the clips with the serrated-flange screws.

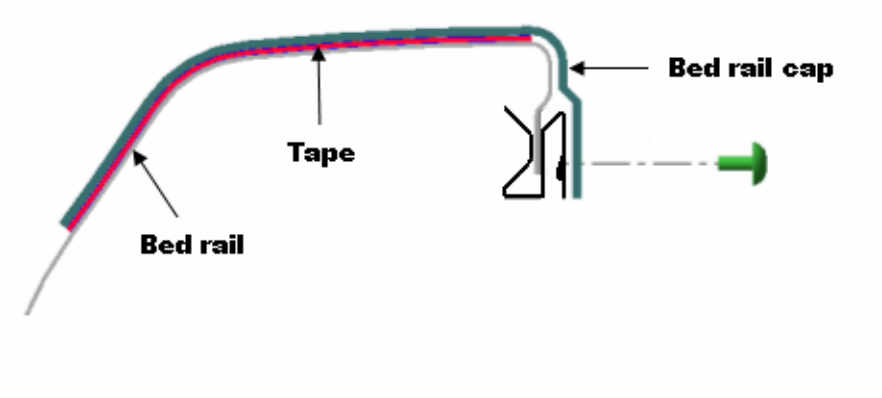

(B) Tail gate cap installation.

1. Peel the red vinyl backing away from the pieces of tape on the inside of the tailgate cap.
2. Center the part on the tailgate and apply 30 lbs. of pressure per square inch to the taped areas for proper bond.
3. Wait an hour ensuring the vehicle maintains a temperature over 60º and apply 30 lbs. of pressure per square inch to the taped areas **again** for proper adhesion to the vehicle. NOTE: the tape reaches maximum adhesive bond after 24 hours of contact.