INSTALLATION MANUAL

13472

Level of Difficulty

Easy

Installation difficulty levels are based on time and effort involved and may vary depending on the installer level of expertise, condition of the vehicle and proper tools and equipment.

Weight Carrying Capacity

Gross trailer weight (GTW)	6,000 lbs.
Tongue weight (TW)	900 lbs.

Weight Distribution Capacity

Weight distribution (WD)	8,000 lbs.
WD tongue weight (WDTW)	900 lbs.

Parts List

Item	Qty	Description
1	6	Hex bolt, M14-1.5 x 40mm, CL10.9
2	6	Conical-toothed washer, 9/16"

Tools Required

Ratchet	Torque wrench
Socket, 22mm	Wire pipe brush
Socket extension, 6"	--

* For a tools reference guide visit **curtmfg.com/trailer-hitch-installation**

⚠ WARNING

Never exceed the vehicle manufacturer's recommended towing capacity.

Product Photo

NOTICE

Visit **www.curtmfg.com** for a full-color copy of this instruction manual, as well as helpful videos, guides and much more!

Before you begin installation, read all instructions thoroughly.

Proper tools will improve the quality of installation and reduce the time required.

This installation requires:
- Lowering of the spare tire
- Use of existing weldnuts

Periodic inspection of the trailer hitch should be performed to ensure all mounting hardware remains tight and structural components are secure.

To help prevent damage to the product or vehicle, refer to the specified torque specifications when securing hardware during the installation process.

SAFETY INSTRUCTIONS

Safety glasses should be worn at all times while installing this product.

Product Registration and Warranty

CURT stands behind our products with industry-leading warranties. To get copies of the product warranties, register your purchase or provide feedback, visit: **warranty.curtgroup.com/surveys**

ASSEMBLY

Parts List

Item	Qty	Description
1	6	Hex bolt, M14-1.5 x 40mm, CL10.9
2	6	Conical-toothed washer, 9/16"

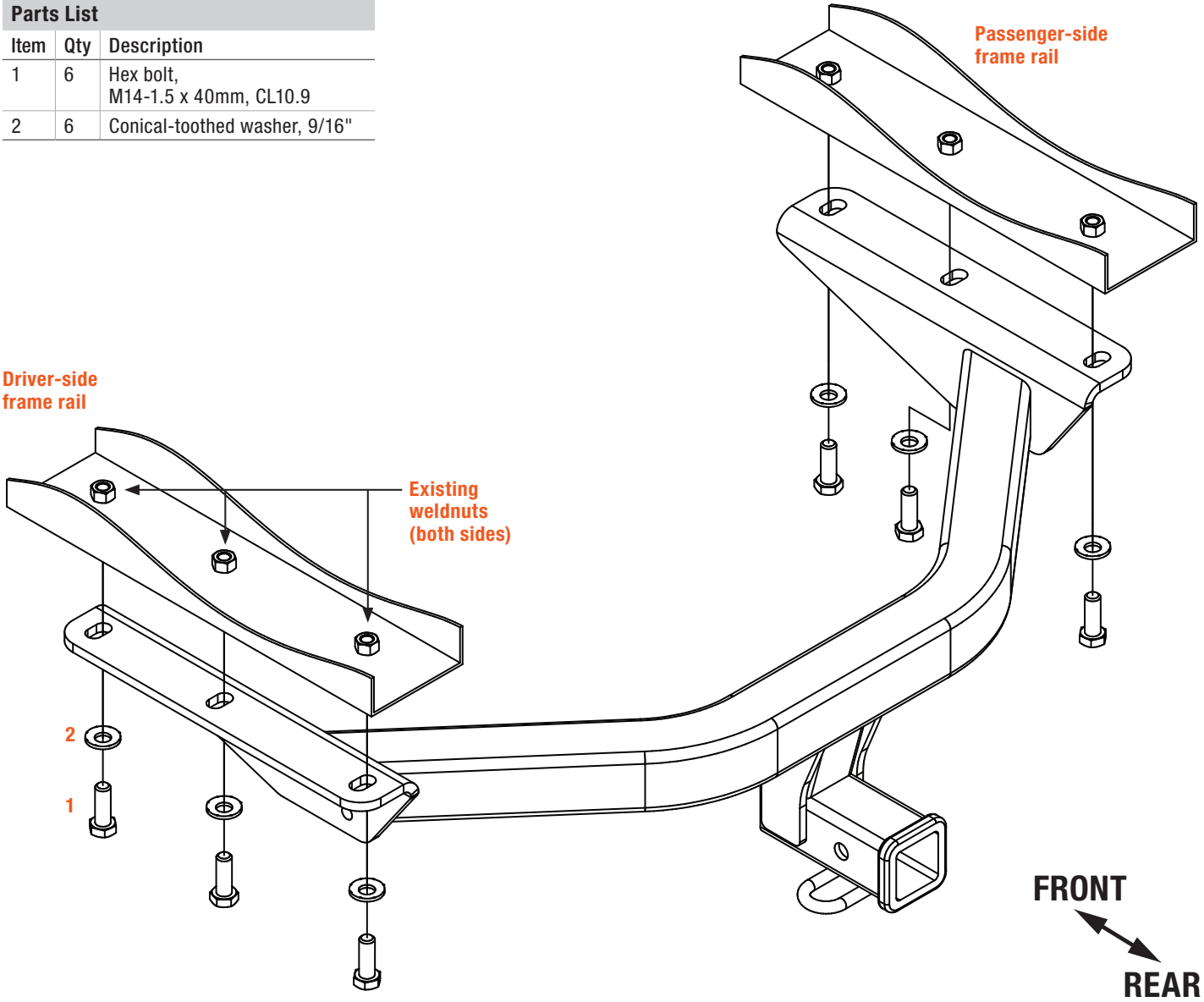

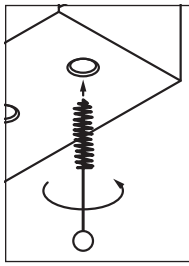

WELDNUT CLEANING

To remove debris from weldnuts in frame, spary lubricant or compressed air into the hole.

For heavy debris, use a wire brush. Take care not to damage threads.

CONICAL TOOTHED WASHER ORIENTATION

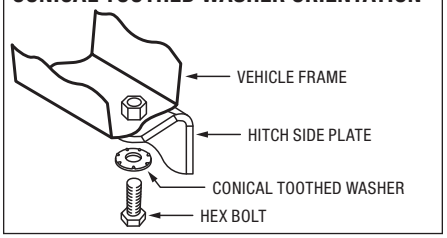

Step 1

Lower the spare tire from inside the vehicle by using the tools provided with the vehicle, located under storage compartment. Set aside for reinstallation in Step 3.

Clean all weldnuts, where applicable.

Step 2

Raise the trailer hitch into position and loosely install three M14 hex bolts (#1) and conical-toothed washers (#2) into the existing weldnuts on both sides of the vehicle. Torque M14 bolts to 136 lb-ft.

Step 3

Raise the spare tire back into place with the vehicle tools provided.

Note: While raising the spare tire back into place, inspect the hitch and tire to make sure there is adequate clearance. If additional clearance is needed between the hitch and tire, push the tire forward while raising it.

Final Installed Image

TOWING BASICS & SAFETY INFORMATION

For information on safely towing your trailer, visit **curtmfg.com/understanding-towing**.