INSTALLATION MANUAL

70139

Level of Difficulty

Moderate

Installation difficulty levels are based on time and effort involved and may vary depending on the installer level of expertise, condition of the vehicle and proper tools and equipment.

Installed Attachment Tabs

Height	16"
Width	34-1/2"

Parts List

Item	Qty	Description
1	1	Tow bar base plate, driver-side
2	1	Tow bar base plate, passenger-side
3	2	Tow bar mounting tab
4	2	Safety cable, 7,500 lbs.
5	10	Square-hole spacer, 1/4" x 1" x 3"
6	10	Carriage bolt, 1/2"-13 x 2", grade 8
7	10	Flange nut, 1/2"-13, grade 8
8	10	Fishwire, 1/2"
9	2	Quick link, 1/2"
10	2	Socket plug

Tools Required

Torque wrench	Drill
Socket, 3/4"	Drill bit, 1/2"
Socket, 5.5mm	Large clamp
Socket, 10mm	Flat head screwdriver
Socket, 15mm	Tape measure

⚠ WARNING

Never exceed the vehicle manufacturer's recommended gross vehicle weight rating (GVWR).

Product Photo

Not pictured: Safety cables, quick links and socket plugs

⚠ CAUTION

Take care when cutting any plastic or metal as injury may occur if done improperly.

NOTICE

Visit **www.curtmfg.com** for a full-color copy of this instruction manual, as well as helpful videos, guides and much more!

Before you begin installation, read all instructions thoroughly.

Proper tools will improve the quality of installation and reduce the time required.

This installation requires:
- Temporarily remove bumper
- Remove tow hooks
- Drilling
- Trimming
- Fishwiring

To help prevent damage to the product or vehicle, refer to the specified torque specifications when securing hardware during the installation process.

If equipped, we recommend removing the base plate attachment tabs when not in use.

SAFETY INSTRUCTIONS

Safety glasses should be worn at all times while installing this product.

Product Registration and Warranty

CURT stands behind our products with industry-leading warranties. To get copies of the product warranties, register your purchase or provide feedback, visit: **warranty.curtgroup.com/surveys**

ASSEMBLY

Parts List		
Item	Qty	Description
1	1	Tow bar base plate, driver-side
2	1	Tow bar base plate, passenger-side
3	2	Tow bar mounting tab
4	2	Safety cable, 7,500 lbs.
5	10	Square-hole spacer, 1/4" x 1" x 3"
6	10	Carriage bolt, 1/2"-13 x 2", grade 8
7	10	Flange nut, 1/2"-13, grade 8
8	10	Fishwire, 1/2"
9	2	Quick link, 1/2"
10	2	Socket plug

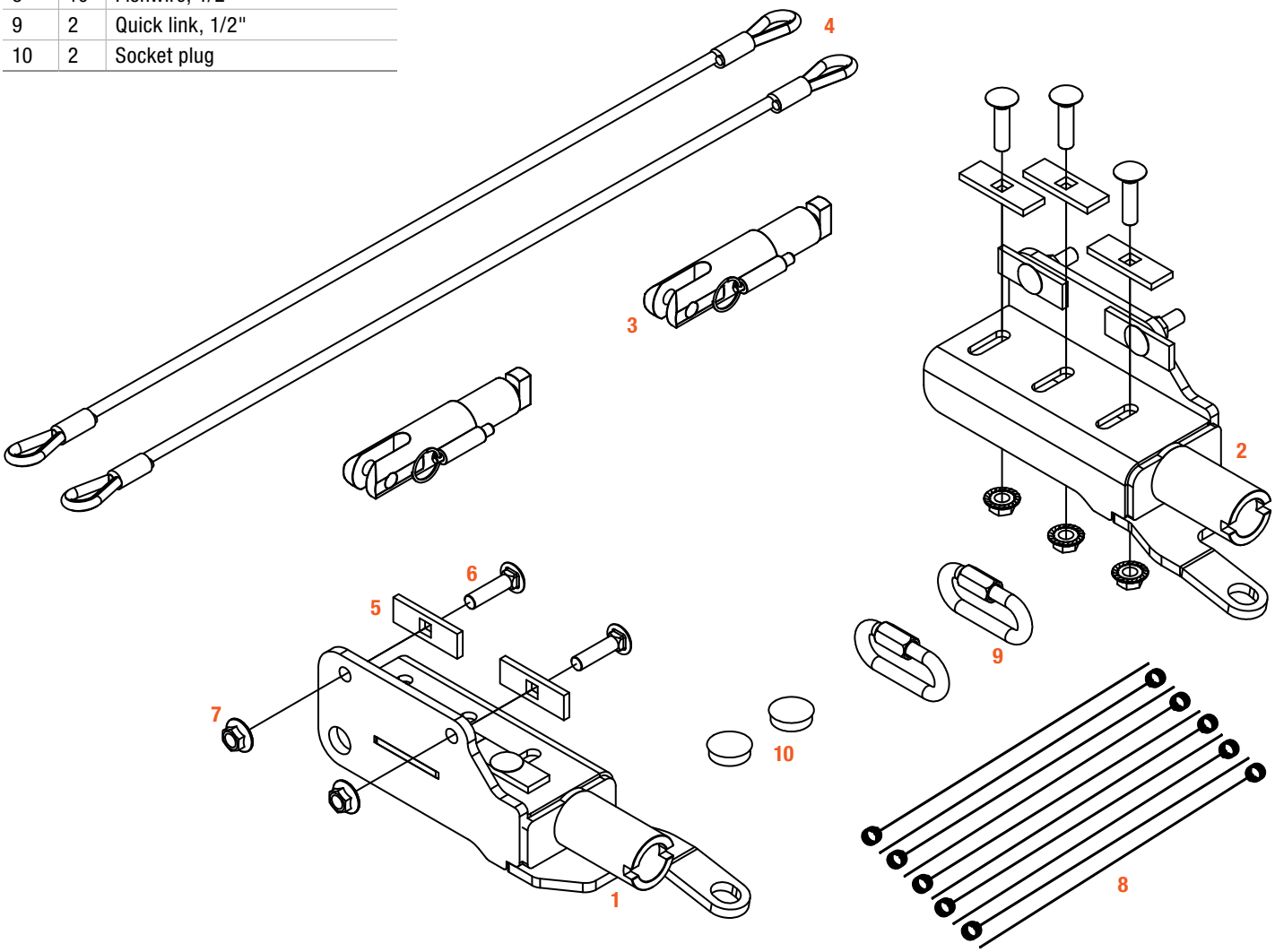

BUMPER COVER REMOVAL

LINCOLN NAVIGATOR

Step 1

Remove the 11 push pins from the radiator cover. Lift the ends of the radiator cover and unclip both sides. Remove the radiator cover.

Step 2

Use a 10mm socket to remove four bolts from the top of the grill support on each side of the vehicle. Eight bolts total.

Step 3

Use a 5.5mm socket and flathead screwdriver to remove three bolts and one push pin from in front of the tire on the front wheel well. Repeat on the other side of the vehicle.

Step 4

Pull the liner back and use a 5.5mm socket to remove the three bolts attaching the bumper cover to the fender. Repeat on other end of the bumper cover.

Step 5

Use a 5.5mm socket and flathead screwdriver to remove six bolts and two push pins from the underside of the bumper cover.

FORD EXPEDITION

Step 6

Use a 5.5mm socket and flathead screwdriver to remove three bolts and one push pin from in front of the tire on the front wheel well. Repeat on the other side of the vehicle.

FORD EXPEDITION (CONTINUED)

Step 7

Pull the liner back and use a 10mm socket to remove the three bolts attaching the bumper cover to the fender.

Repeat on other end of the bumper cover.

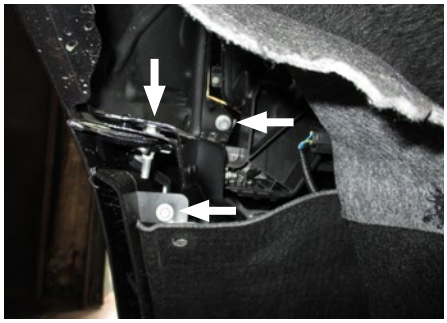

Step 8

Use a 5.5mm socket to remove the six bolts from the underside of the bumper cover.

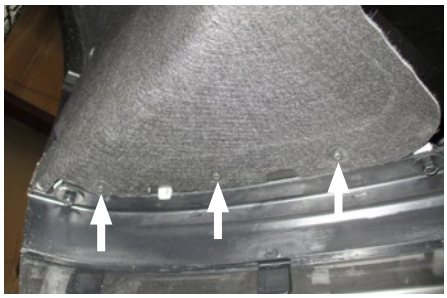

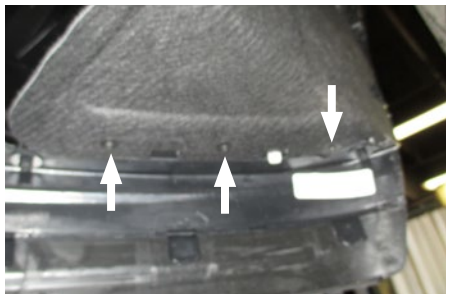

TOW BAR BASE PLATE INSTALLATION

Step 9

Lincoln Navigator Only: Near the headlight on the passenger side of the vehicle, disconnect the fluid line by squeezing and pulling apart.

Step 10

On the driver side, disconnect the electrical harness from the front bumper cover and carefully remove the bumper cover.

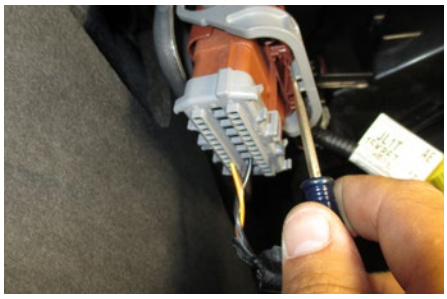

Step 11

Use a 15mm socket to remove two bolts from each of the tow hooks.

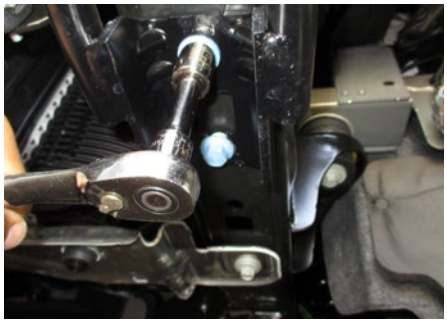

Step 12

On the driver side, fishwire (#8) three 1/2” carriage bolts (#6) and square-hole spacers (#5) into the three holes in the bottom of the frame rail.

Lift the base plate (#1) into place over the bolts and loosely install the provided flange nuts (#7).

Repeat on the passenger side of the vehicle.

Step 13

Press the base plate tight to the frame of the vehicle and torque all 1/2” hardware to 110 lb-ft.

Step 14

Use the base plate as a template to drill the two side holes with a 1/2” drill bit. Fishwire two 1/2” carriage bolts (#6) and square-hole spacers (#5) into the frame through the drilled holes.

Install the 1/2” flange nuts (#7) and torque to 110 lb-ft.

Repeat on the other side of the vehicle.

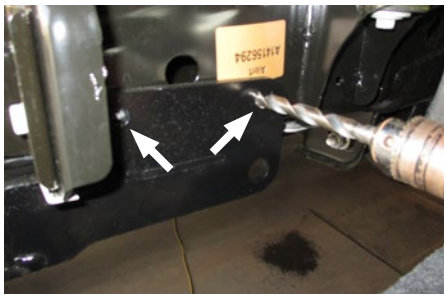

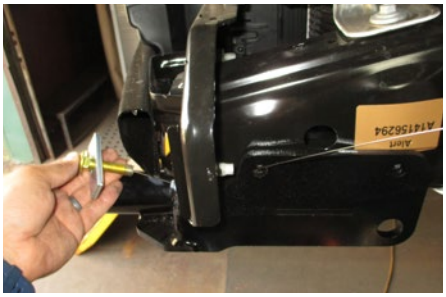

Step 15

Install the permanent safety cables (#4) and quick links (#9), looping them around the vehicle frame and linking them to the tow bar base plates (#1,#2). There must be one cable on each side of the vehicle.

Make sure the cables do not pinch or interfere with any hoses, wiring or other components.

See 'Installing the Permanent Base Plate Safety Cables' for additional information.

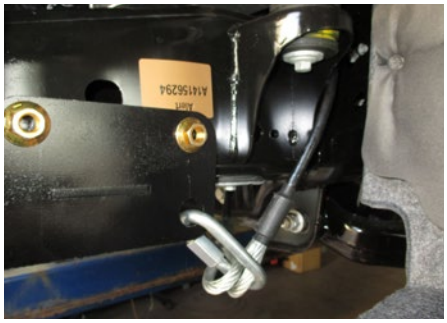

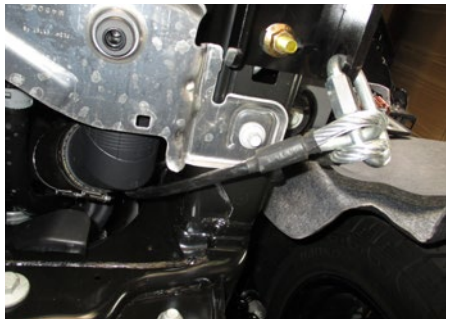

Step 16 - Lincoln Navigator Models

Measure 3/4” from the vertical lip at the bottom of the bumper cover and 1/4” from the bumper.

Mark a 5-1/2” wide by 2-1/4” tall rectangle and trim this area away to allow room for the socket and safety cable loop. Repeat on other side.

Reinstall bumper cover and grill cover. Reattach fluid line and electrical harness removed in steps 1 and 2. Reinstall the bumper cover.

When ready to tow, install the tow bar mounting tabs (#3). When not towing, insert the socket plugs (#10) into the ends of the tow bar base plates (#1,#2).

Step 16 - Ford Expedition Models

Trim the face area of the plastic around the tow hook recess as needed to allow room for the socket and safety cable loop. Do this on both sides of the vehicle.

Reattach electrical harness and reinstall the bumper cover.

When ready to tow, install the tow bar mounting tabs (#3). When not towing, insert the socket plugs (#10) into the ends of the tow bar base plates (#1,#2).

Final Installed Image

SAFETY CABLE INSTALLATION

Installing the Permanent Base Plate Safety Cables

When dinghy towing a vehicle with a tow bar, base plate safety cables should be used at all times.
In the event of a disconnect, the safety cables are designed to help prevent complete vehicle separation.
When installing the safety cables, use the illustrations below as a guide.

Installation guidelines

1. The cables must be connected to the base plate and the vehicle frame.
2. Two cables must be installed.
3. Each cable must meet or exceed the gross weight of the towed vehicle.
4. Make sure cables do not pinch or interfere with hoses, wiring or other components.

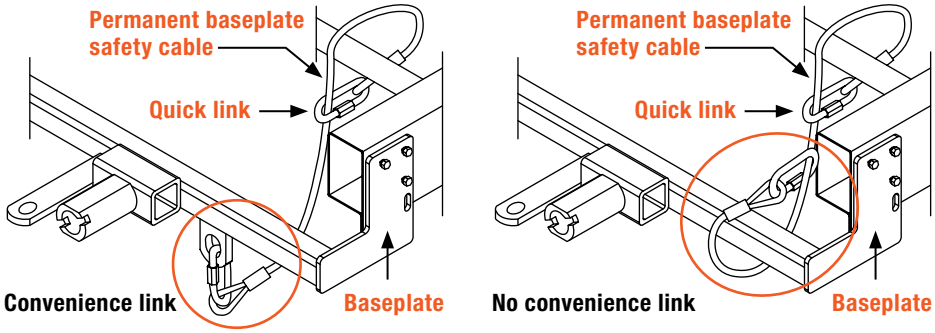

Note: Base plate safety cables are not a replacement for safety chains connecting the tow vehicle to the towed vehicle.

ADDITIONAL INFORMATION

Towing Tips	
Check your equipment	Periodically check the condition of all towing equipment. Ensure all fasteners are tight and that all structural components are sound. Do not tow with worn or damaged parts.
Vehicle manufacturer's recommendations	Review the owner's manual for your towed vehicle and towing vehicle for specific recommendations, capacities and requirements.