INSTALLATION INSTRUCTIONS

⚠ ALL STEPS MUST BE FOLLOWED TO ENSURE PROPER FUNCTION OF THE TAILLIGHT CONVERTER

TAILLIGHT CONVERTER

TESTING PROCEDURE

If testing with a test light, attach the ground lead of the tester to the exposed ground terminal of the 4-flat end. Activate the tow vehicle left turn, right turn, tail and brake lights one at a time. Probe the three receptacles of the 4-flat end to confirm proper functionality.

If testing with a trailer, mate the 4-flat with the trailer and run the same test as the circuit tester using the trailer lights. If a function on the trailer lights does not work properly, disconnect the trailer 4-flat, turn functions on the vehicle off and recheck function with a circuit tester. If functionality is good, check the trailer for potential problems.

The short circuit, overload and thermal protection of the taillight converter may cause the trailer lamps to pulse on briefly every two seconds. If this pulsing is seen when testing with a trailer, this is an indication that the lamp circuits exceed the ratings of the product or there is a wiring issue with the trailer.

WARNING

The battery connection must be fuse protected, 15 amp max. Exceeding the product rating can cause loss of warranty, overheating and potential fire. Do not exceed product rating or tow vehicle's lamp load rating, whichever is lower.

Check for miscellaneous items that may be hidden behind or under any surface before drilling to avoid damage and / or personal injury.

Signal Circuits - 5.0 amps per side
Tail / Running Circuits - 7.5 amps total

Check vehicle owner's manual or contact the vehicle manufacturer for more information.

WIRING LOCATION GUIDE

Representative vehicles shown below - DS, driver side / PS, passenger side

PASSENGER CARS (P)

P1 - Behind DS taillight housing, outside of trunk
P2 - Behind PS taillight housing, outside of trunk
P3 - Behind DS taillight housing, inside of trunk
P4 - Behind PS taillight housing, inside of trunk
P5 - Behind DS rear bumper
P6 - Behind center of rear bumper
P7 - Behind PS rear bumper

SUVS, MINI & FULL-SIZED VANS (S)

S1 - Behind DS taillight housing
S2 - Behind PS taillight housing
S3 - Behind DS rear access panel
S4 - Behind PS rear access panel
S5 - Behind DS rear bumper
S6 - Behind center of rear bumper
S7 - Behind PS rear bumper
S8 - Under rear floor panel

PICKUP TRUCKS (T)

T1 - Behind DS taillight housing
T2 - Behind PS taillight housing
T3 - Behind DS rear bumper
T4 - Behind center of rear bumper fascia
T5 - Behind PS rear bumper

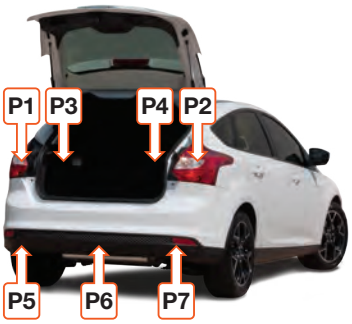

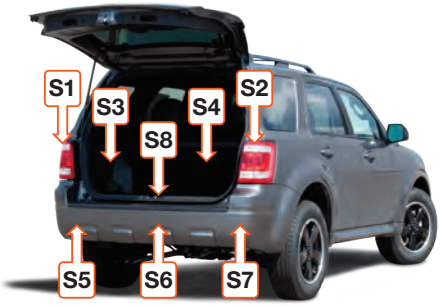

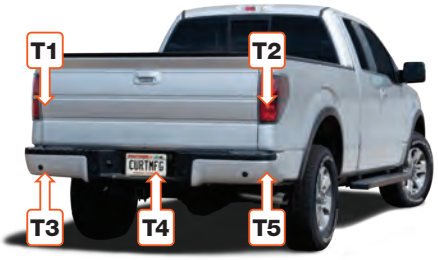

HOW TO DETERMINE VEHICLE WIRING TYPES

First, determine which wires will not be used for installation. With the vehicle running, check to ensure all lights are off at the back of the vehicle. With all vehicle lights off, probe the taillight connectors while they are still connected to the vehicle.

If using a multimeter:
Ensure the meter is in the DC volt setting. Any wires carrying greater than two volts will not be used to determine vehicle wiring type and will not be used by the taillight converter.

If using a test light:
Any wires that illuminate the bulb, dim or fully, will not be used to determine vehicle wire type and will not be used by the taillight converter.

Vehicle wiring type and function signal location in the housing can now be determined by activating each light's circuit, one at a time, and probing the remaining wires. Follow the chart below.

Vehicle Wiring Type	Wiring Description	Wire Probing Voltage on Vehicle Wires			
--	--	Only PS signal activated	Only brakes depressed	Only DS signal activated	Only tail lamps activated
Two-wire	Combined stop and turn signal with an independent tail signal	12V flashing signal on PS	12V signal on both sides - same wire as turn signal	12V flashing signal on DS	12V signal on tail
Three-wire	Independent stop, turn and tail turn signals	12V flashing signal on PS	12V signal on stop wire on both sides	12V flashing signal on DS	12V signal on tail
PWM-ST	Combined stop and tail signal with an independent turn signal	12V flashing signal on PS	12V signal on stop / tail wire on both sides - same wire used as stop and tail	12V flashing signal on DS	2V-5V signal or dim lamp on stop / tail wire on both sides - same wire used as stop and tail
PWM-STT	Combined stop, turn and tail signal	12V flashing signal on PS - same wire used as stop, turn and tail	12V signal on stop / turn / tail wire on both sides - same wire used as stop, turn and tail	12V flashing signal on DS - same wire used as stop, turn and tail	2V-5V signal or dim lamp on stop / turn / tail wire on both sides - same wire used as stop, turn and tail

INSTALLATION

Step 1
Locate vehicle taillight wiring. Refer to the wiring location guide on the second page.

Step 2
Identify the wiring type of your vehicle using the 'How to Determine Vehicle Wiring Types' instructions on page two.

Step 3
Locate vehicle battery and disconnect the negative battery terminal.

Step 4
Using snap locks, attach the input wires of the taillight converter to the corresponding vehicle harness wires identified in Step 2 using the 'Wiring Installation' table below. Refer to photos A, B and C to install the snap locks.

Step 5
Locate a flat spot near the taillight. Adhere the black converter box using the provided double-sided tape and secure it with the included cable ties.

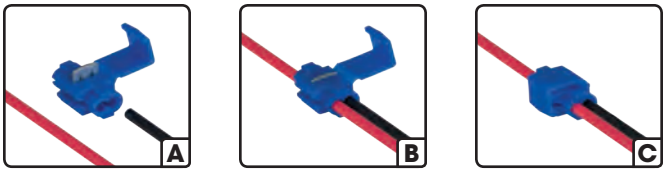

Step 6
Locate a suitable grounding point near the connector such as an existing screw with nut in the vehicle frame or drill a 3/32" pilot hole for the provided screw. The area should be free of rust, dirt and paint. Secure the white ground wire using the ring terminal and provided screw.

WARNING: Check for miscellaneous items that may be hidden behind or under any surface before drilling to avoid damage and / or personal injury.

Step 7
Secure any loose wires with the provided cable ties. Reinstall all items removed during install and reconnect negative battery terminal. When in use, route the 4-flat to the center of the vehicle. When not in use secure in a convenient out of the way location.

WIRING INSTALLATION

Vehicle Wiring Type	Green Wire	Red Wire	Yellow Wire	Brown Wire
Two-wire	Splice to right stop / turn wire	Ground with white wire	Splice to left stop / turn wire	Splice to tail wire
Three-wire	Splice to right turn wire	Splice to stop wire	Splice to left turn wire	Splice to tail wire
PWM-ST	Splice to right turn wire	Splice to stop / tail wire	Splice to left turn wire	Ground with white wire
PWM-STT	Splice to right turn / stop / tail wire	Ground with white wire	Splice to left turn / stop / tail wire	Ground with white wire

CONVERTER WIRING DIAGRAM

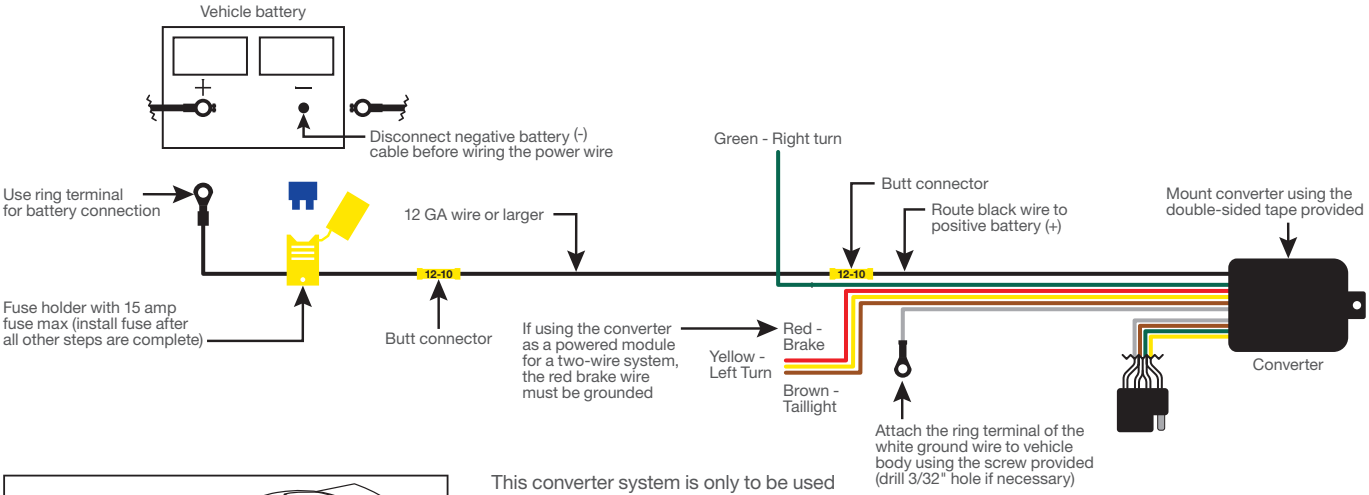

This converter system is only to be used on 12 volt negative ground systems

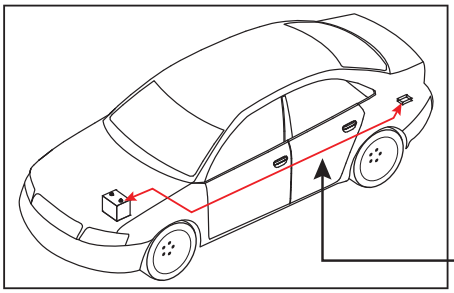

Route 12 GA wire to vehicle battery location, taking care to avoid any pinch points and hot or rotating components.