11037 AUDI A5 (MODELS WITH SINGLE MUFFLER)

GROSS LOAD CAPACITY WHEN USED AS A WEIGHT CARRYING HITCH: 2,000 LBS. TRAILER WEIGHT & 200 LBS. TONGUE WEIGHT.

*****DO NOT EXCEED VEHICLE MANUFACTURER'S RECOMMENDED TOWING CAPACITY.*****

WARNING: ALL NON-TRAILER LOADS APPLIED TO THIS PRODUCT MUST BE SUPPORTED BY AUXILIARY STABILIZING STRAPS.

**** FAILURE TO PROPERLY SUPPORT NON-TRAILER LOADS WILL VOID PRODUCT WARRANTY****

HAVING INSTALLATION QUESTIONS? CALL TECHNICAL SUPPORT AT 1-800-798-0813

Parts List			
ITEM	QTY	PART NUMBER	DESCRIPTION
1	2	1/2-13 x 1 1/4	CARRIAGE BOLT
2	4	CM-SP19	.250 x 1.25 x 3.00" SQUARE HOLE SPACER
3	2	CM-SP40	.188 x 1.00 x 3.00" SQUARE HOLE SPACER
4	4	HFN 1213	HEX FLANGE NUT
5	2	1/2-13 x 1 1/2	CARRIAGE BOLT
6	2	1_2 FISHWIRE	1/2" FISHWIRE

TOOLS REQUIRED
3/4" SOCKET
10, 13 AND 16MM SOCKETS
12" EXTENSION
RATCHET
TORQUE WRENCH
TIN SNIPS

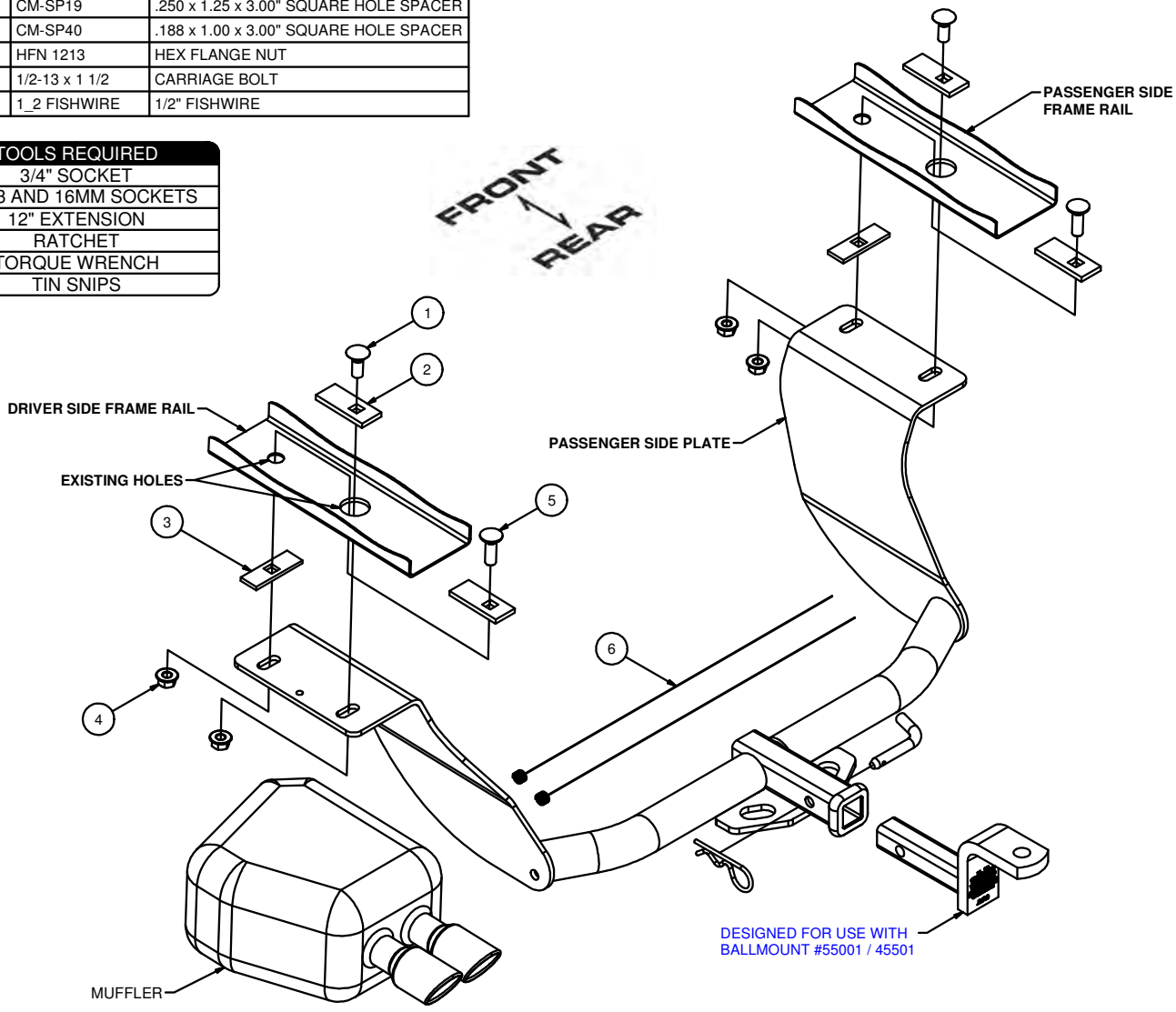

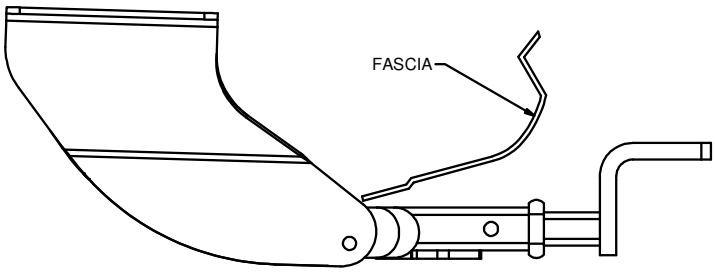

INSTALLED HITCH POSITION

HITCH WEIGHT: 32 LBS.

INSTALL TIME

PROFESSIONAL: 30 MINUTES

NOVICE (DIY): 60 MINUTES

INSTALL NOTES:

- **NO DRILLING REQUIRED**
- **LOWER EXHAUST**
- **REMOVE AND TRIM HEAT SHIELD**
- **FISHWIRE HARDWARE**
- **TRIM UNDERBODY PANEL**

PERIODICALLY CHECK THIS RECEIVER HITCH TO ENSURE THAT ALL FASTENERS ARE TIGHT AND THAT ALL STRUCTURAL COMPONENTS ARE SOUND.

Curt Manufacturing Inc., warrants this product to be free of defects in material and/or workmanship at the time of retail purchase by the original purchaser. If the product is found to be defective, Curt Manufacturing Inc., may repair or replace the product, at their option, when the product is returned, prepaid, with proof of purchase. Alteration to, misuse of, or improper installation of this product voids the warranty. Curt Manufacturing Inc.'s liability is limited to repair or replacement of products found to be defective, and specifically excludes liability for incidental or consequential loss or damage.

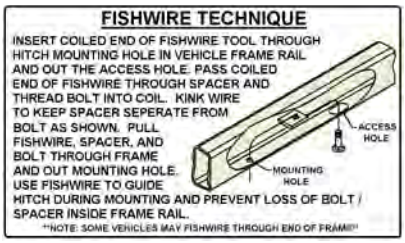

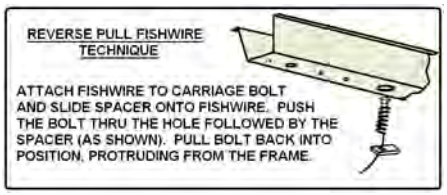



MUFFLER HEAT SHIELD TRIMMING DIAGRAM

INSTALLATION STEPS

1. Remove plastic underbody panel on the passenger side. Remove the underbody panel by removing (2) screws, (2) plastic push fasteners and (1) nut. (**Note:** Plastic push fastener is removed by prying head down with a small screwdriver, pinching opposite end and pushing down through hole.)
2. Lower the exhaust by removing the (1) nut securing the rearmost exhaust hanger brackets to the driver side frame rail. Remove the (2) bolts securing the exhaust hanger bracket near the cross member, and the (1) bolt from the exhaust hanger forward of the muffler.
3. Remove the muffler heat shield from the vehicle by removing the (4) nuts securing it. Trim the heat shield to allow access to the existing holes in the frame rail. (See Muffler Heat Shield Trimming Diagram.)
4. Reinstall the heat shield removed in Step 3.
5. Fishwire a **1/2-13 x 1 1/2"** carriage bolt and CM-SP19 spacer into each of the forward holes as shown. (See Fishwire Technique.)
6. Reverse pull fishwire a **1/2-13 x 1 1/4"** carriage bolt and CM-SP19 spacer into each of the rearmost holes as shown. (See Reverse Pull Fishwire Technique.)
7. Raise the hitch into position, taking care not to push the fishwired hardware into the frame rails. Place a CM-SP40 between the side plate and frame rail passing the forwardmost bolt through both the spacer and the side plate. Secure the hitch to the frame rails with the hex flange nuts as shown.
8. Torque all 1/2" hardware to 110 ft-lbs.
9. Trim the underbody panel as required to reinstall panel with hitch installed.
10. Raise the exhaust into position and reinstall the fasteners for the exhaust hangers removed in Step 2.

PERIODICALLY CHECK THIS RECEIVER HITCH TO ENSURE THAT ALL FASTENERS ARE TIGHT AND THAT ALL STRUCTURAL COMPONENTS ARE SOUND.

Curt Manufacturing Inc., warrants this product to be free of defects in material and/or workmanship at the time of retail purchase by the original purchaser. If the product is found to be defective, Curt Manufacturing Inc., may repair or replace the product, at their option, when the product is returned, prepaid, with proof of purchase. Alteration to, misuse of, or improper installation of this product voids the warranty. Curt Manufacturing Inc.'s liability is limited to repair or replacement of products found to be defective, and specifically excludes liability for incidental or consequential loss or damage.