11091 VOLKSWAGEN PASSAT/ CC

10/12/2012

GROSS LOAD CAPACITY WHEN USED AS A WEIGHT CARRYING HITCH: 2,000 LBS. TRAILER WEIGHT & 200 LBS. TONGUE WEIGHT.
*****DO NOT EXCEED VEHICLE MANUFACTURER'S RECOMMENDED TOWING CAPACITY.*****
WARNING: ALL NON-TRAILER LOADS APPLIED TO THIS PRODUCT MUST BE SUPPORTED BY AUXILIARY STABILIZING STRAPS.
**** FAILURE TO PROPERLY SUPPORT NON-TRAILER LOADS WILL VOID PRODUCT WARRANTY****
HAVING INSTALLATION QUESTIONS? CALL TECHNICAL SUPPORT AT 1-800-798-0813

Parts List			
ITEM	QTY	PART NUMBER	DESCRIPTION
1	2	7/16-14 x 1 1/4	CARRIAGE BOLT
2	2	CM-SP11	.250 x 1.00 x 2.50" SQUARE HOLE SPACER
3	2	7/16-14	HEX FLANGE NUT
4	1	CM-438-FW	7/16 " FISHWIRE TOOL
5	2	M8-1.25 x 40	HEX BOLT
6	2	5/16"	LOCK WASHER
7	2	5/16"	WASHER

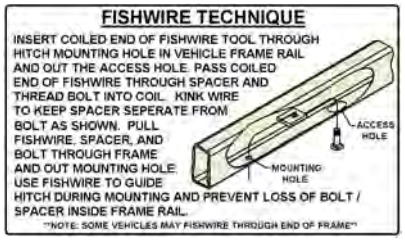

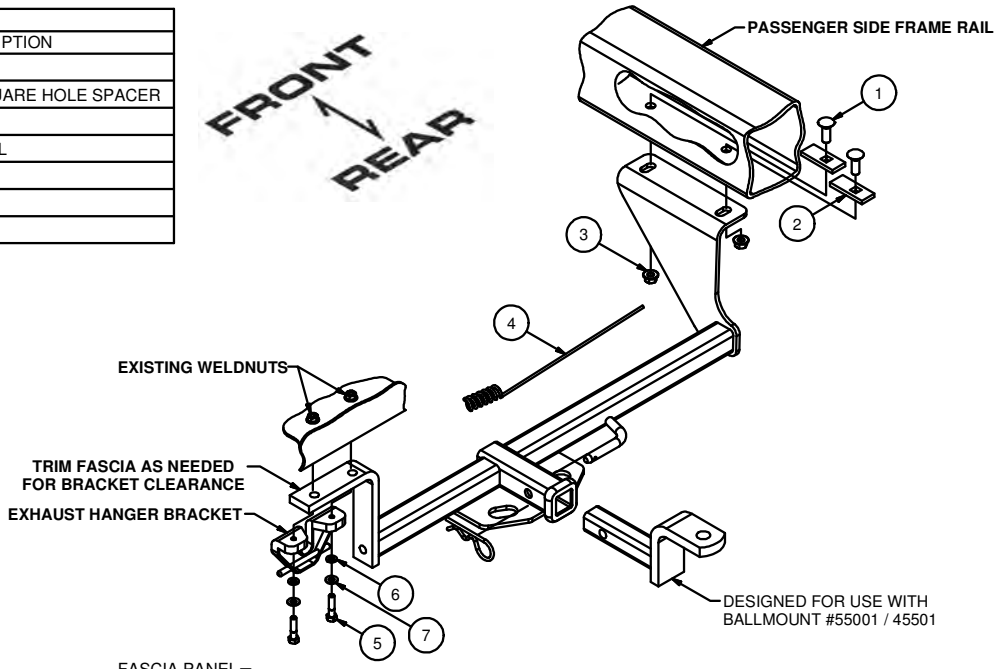

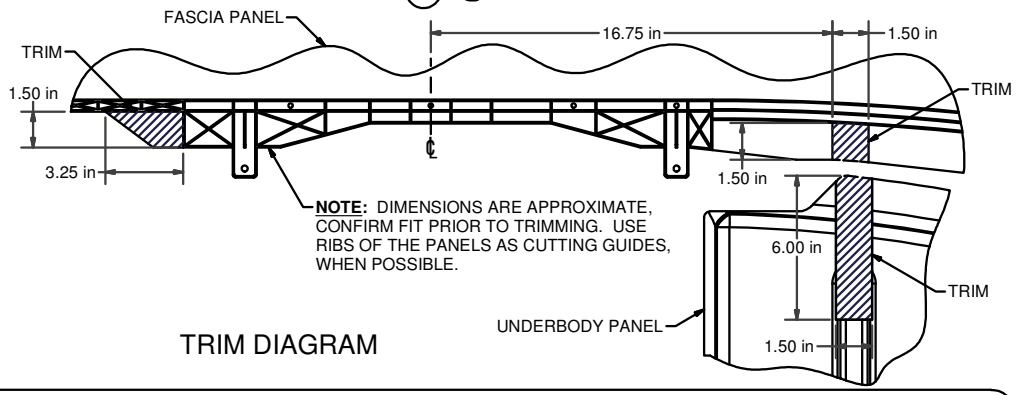

TRIM DIAGRAM

HITCH WEIGHT: 21 LBS.

INSTALL TIME

PROFESSIONAL: 60 MINUTES

NOVICE (DIY): 120 MINUTES

INSTALL NOTES:

- REMOVE UNDERBODY SHIELD
- DRILLING REQUIRED
- FASCIA TRIMMING REQUIRED

INSTALLATION STEPS

1. Remove underbody panel by removing (5) torx head fasteners from underbody panel on passenger side. **Note:** You can remove underbody panel or trim panel and reinstall, consult vehicle owner.
2. Remove (2) 8mm hex bolts from the exhaust hanger bracket on driver side.
3. Mark and trim fascia panel. **Note:** Dimensions are approximate, confirm fit prior to trimming. (See Trim Diagram)
4. Lift hitch into position. Using the hitch as a template mark and drill passenger side holes. **Note:** Check that hitch is square on vehicle prior to drilling holes.
5. Fishwire bolts and square hole spacers into passenger side frame rail though access hole.
6. Sandwich hitch between the exhaust hanger bracket (removed in step 2) and the vehicle frame.
7. Install supplied fasteners as shown.
8. Torque all 8mm fasteners to 23 lb-ft, and all 7/16" fasteners to 70 lb-ft.
9. Mark and trim underbody panel to fit and reinstall if required. **Note:** Dimensions are approximate, confirm fit prior to trimming. (See Trim Diagram)

PERIODICALLY CHECK THIS RECEIVER HITCH TO ENSURE THAT ALL FASTENERS ARE TIGHT AND THAT ALL STRUCTURAL COMPONENTS ARE SOUND.

Curt Manufacturing Inc., warrants this product to be free of defects in material and/or workmanship at the time of retail purchase by the original purchaser. If the product is found to be defective, Curt Manufacturing Inc., may repair or replace the product, at their option, when the product is returned, prepaid, with proof of purchase. Alteration to, misuse of, or improper installation of this product voids the warranty. Curt Manufacturing Inc.'s liability is limited to repair or replacement of products found to be defective, and specifically excludes liability for incidental or consequential loss or damage.