11291 INSTALLATION INSTRUCTIONS

Safety glasses should be worn at all times while installing this product.

YEARS: 2012-PRESENT | **MAKE: SCION** | **MODEL: iQ** | **STYLE: COMPACT**

WARNING: NEVER EXCEED YOUR VEHICLE MANUFACTURER'S RECOMMENDED TOWING CAPACITY

WEIGHT CARRYING:

TRAILER WEIGHT: 1,000 LBS.
TONGUE WEIGHT: 150 LBS.

WARNING:
WE RECOMMEND THE USE OF 18050 STABILIZING STRAPS FOR ALL NON-TRAILER (WHEEL-LESS) LOADS. PLEASE SEE THE CURT CATALOG OR VISIT US ONLINE AT WWW.CURTMFG.COM FOR FURTHER INFORMATION.

INSTALLATION TIME: 20 MIN.

THE INSTALL TIME LISTED IS FOR PROFESSIONAL INSTALLERS. IF YOU ARE HESITANT TO UNDERTAKE THIS TASK ON YOUR OWN, CONTACT AN AUTHORIZED CURT INSTALLER FOR ADDITIONAL ASSISTANCE.

INSTALLATION REQUIRES:

 RATCHET	 TORQUE WRENCH	 6" SOCKET EXTENSION
 DIE GRINDER	 9/16" 11/16" SOCKET	 SAFETY GLASSES

INSTALLATION TIPS:

1. *BEFORE YOU BEGIN INSTALLATION, READ ALL INSTRUCTIONS THOROUGHLY.*
2. *TO EASE INSTALLATION, 2 PEOPLE MAY BE REQUIRED.*
3. *USING PROPER TOOLS WILL GREATLY IMPROVE THE QUALITY OF THE INSTALL AND REDUCE THE TIME REQUIRED.*
4. *NEED HELP OR HAVE SOME QUESTIONS? CALL TECHNICAL SUPPORT AT 800.798.0813*

LEVEL OF DIFFICULTY: MODERATE

EASY | ***MODERATE*** | ***CHALLENGING***

	- HOLE ENLARGEMENT
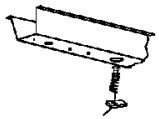	- FISHWIRE HARDWARE

VEHICLE PHOTO:



REPRESENTATIVE PHOTO

HITCH ILLUSTRATION:

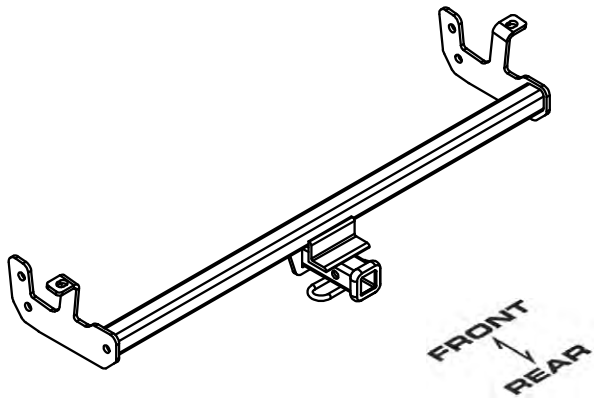

MAKE SURE YOUR HITCH MATCHES

PERIODICALLY CHECK THIS RECEIVER HITCH TO ENSURE ALL FASTENERS ARE TIGHT AND ALL STRUCTURAL COMPONENTS ARE SOUND

CURT Manufacturing LLC. warrants this product to be free of defects in material and/or workmanship at the time of retail purchase by the original purchaser. If the product is found to be defective, Curt Manufacturing LLC. may repair or replace the product at their option, when the product is returned, prepaid, with proof of purchase. Alteration to, misuse of, or improper installation of this product voids the warranty. Curt Manufacturing LLC.'s liability is limited to repair or replacement of products found to be defective, and specifically excludes liability for incidental or consequential loss or damage.

For more information log onto www.curtmfg.com, & for helpful towing tips log onto www.hitchinfo.com

3/22/2013

INSTALLATION WALKTHROUGH:

Parts List			
ITEM	QTY	PART NUMBER	DESCRIPTION
1	2	7/16-14	HEX FLANGE NUT
2	4	3/8-16 X 1 1/2	HEX BOLT
3	4	3/8"	WASHER
4	2	7/16-14 x 1 1/2	CARRIAGE BOLT
5	2	CM-SP7	.250 x 1.00 x 2.00" SQUARE HOLE SPACER
6	2	7_16 FISHWIRE	7/16" FISHWIRE
7	4	HFN3816	HEX FLANGE NUT

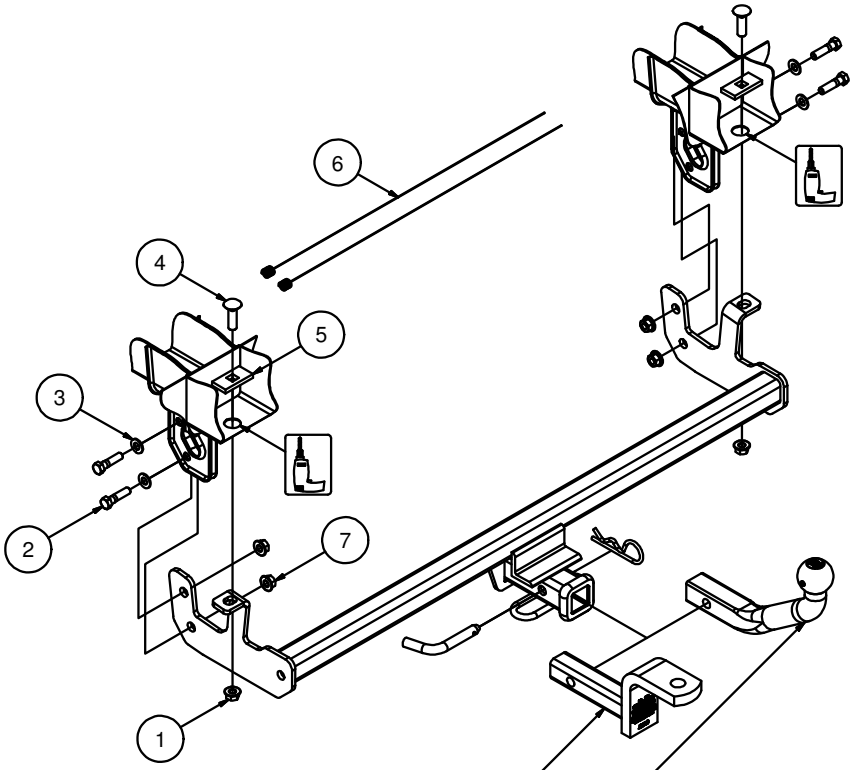

DESIGNED FOR USE WITH
BALLMOUNT # D-55001 / 45501

EURO MOUNT OPTION AVAILABLE
#45571 (1-7/8") AND #45572 (2" BALL)

1. Enlarge existing hole to allow 7/16" carriage bolts and SP7 spacers to pass through, both sides.



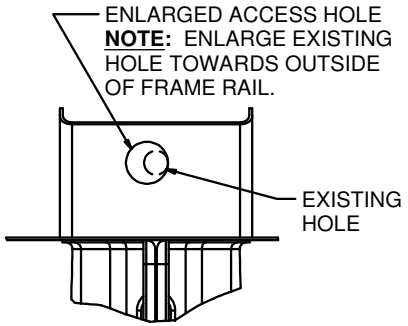

HOLE ENLARGEMENT DIAGRAM

2. Reverse fishwire 7/16" carriage bolts and SP7 spacers through enlarged access holes, both sides.



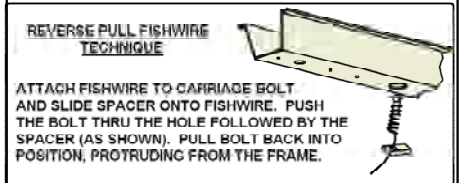

For more information log onto www.curtmfg.com, & for helpful towing tips log onto www.hitchinfo.com

INSTALLATION WALKTHROUGH:

3. Raise hitch into position and loosely secure to carriage bolts using 7/16" hex flange nuts. **Note:** The side plates will slide between the inside of the tow loops.

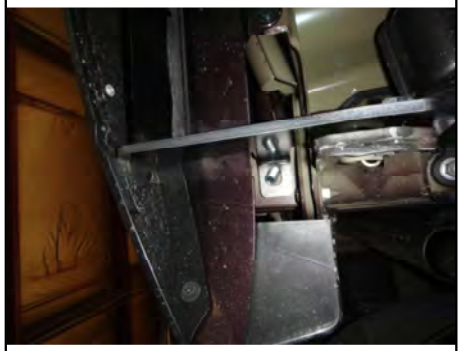

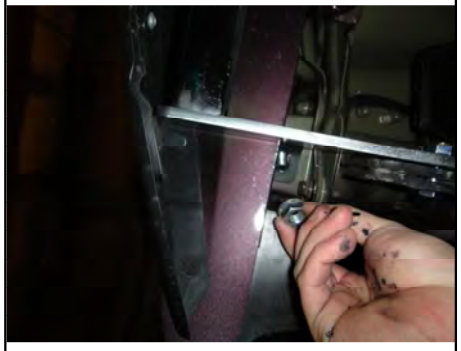

4. Align holes in side plates with holes in tow loops and secure using 3/8" hex bolts, 3/8" washers and 3/8" hex flange nuts, as shown.





5. Torque all 7/16" hardware to 70 ft-lbs.
   Torque all 3/8" hardware to 45 ft-lbs.







For more information log onto www.curtmfg.com, & for helpful towing tips log onto www.hitchinfo.com

11291 SCION iQ

3/22/2013

GROSS LOAD CAPACITY WHEN USED AS A WEIGHT CARRYING HITCH: 1,000 LBS. TRAILER WEIGHT & 150 LBS. TONGUE WEIGHT.
*****DO NOT EXCEED VEHICLE MANUFACTURER'S RECOMMENDED TOWING CAPACITY.*****
WARNING: ALL NON-TRAILER LOADS APPLIED TO THIS PRODUCT MUST BE SUPPORTED BY 18050 STABILIZING STRAPS.
**** FAILURE TO PROPERLY SUPPORT NON-TRAILER LOADS WILL VOID PRODUCT WARRANTY****
HAVING INSTALLATION QUESTIONS? CALL TECHNICAL SUPPORT AT 1-800-798-0813

Parts List			
ITEM	QTY	PART NUMBER	DESCRIPTION
1	2	7/16-14	HEX FLANGE NUT
2	4	3/8-16 X 1 1/2	HEX BOLT
3	4	3/8"	WASHER
4	2	7/16-14 x 1 1/2	CARRIAGE BOLT
5	2	CM-SP7	.250 x 1.00 x 2.00" SQUARE HOLE SPACER
6	2	7_16 FISHWIRE	7/16" FISHWIRE
7	4	HFN3816	HEX FLANGE NUT

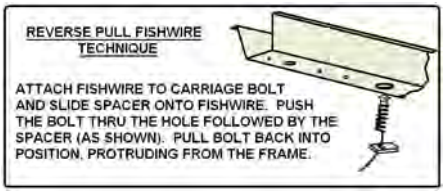

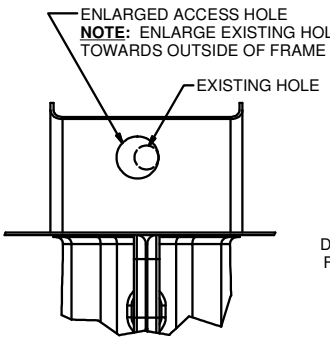

HOLE ENLARGEMENT DIAGRAM

TOOLS REQUIRED
RATCHET
TORQUE WRENCH
6" EXTENSION
DIE GRINDER
9/16" SOCKET
11/16" SOCKET
SAFETY GLASSES

HITCH WEIGHT: 22 LBS.

INSTALL TIME

PROFESSIONAL: 20 MINUTES

NOVICE (DIY): 40 MINUTES

INSTALL NOTES:

- **HOLE ENLARGEMENT**
- **FISHWIRE HARDWARE**

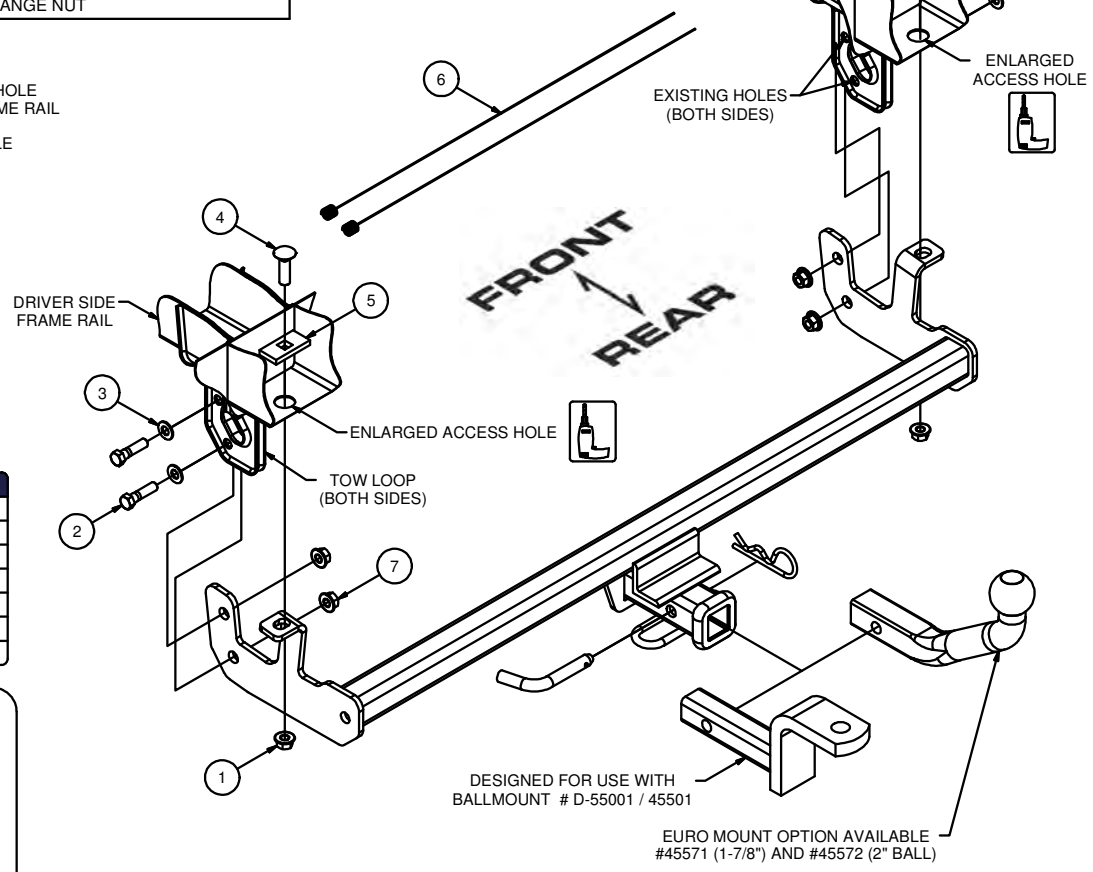

INSTALLATION STEPS

1. Enlarge existing hole to allow 7/16" carriage bolts and SP7 spacers to pass through, both sides. See Hole Enlargement Diagram.
2. Reverse fishwire 7/16" carriage bolts and SP7 spacers through enlarged access holes, both sides. See Reverse Pull Fishwire Technique
3. Raise hitch into position and loosely secure to carriage bolts using 7/16" hex flange nuts. **Note:** The side plates will slide between the inside of the tow loops.
4. Align holes in side plates with holes in tow loops and secure using 3/8" hex bolts, 3/8" washers and 3/8" hex flange nuts, as shown.
5. Torque all 7/16" hardware to 70 ft-lbs. Torque all 3/8" hardware to 45 ft-lbs.

PERIODICALLY CHECK THIS RECEIVER HITCH TO ENSURE THAT ALL FASTENERS ARE TIGHT AND THAT ALL STRUCTURAL COMPONENTS ARE SOUND.

Curt Manufacturing LLC., warrants this product to be free of defects in material and/or workmanship at the time of retail purchase by the original purchaser. If the product is found to be defective, Curt Manufacturing LLC., may repair or replace the product, at their option, when the product is returned, prepaid, with proof of purchase. Alteration to, misuse of, or improper installation of this product voids the warranty. Curt Manufacturing LLC.'s liability is limited to repair or replacement of products found to be defective, and specifically excludes liability for incidental or consequential loss or damage.