11294 01-07 FORD FOCUS SEDAN, 3 DR ZX3 & 5 DR ZX5

9/21/2012

GROSS LOAD CAPACITY WHEN USED AS A WEIGHT CARRYING HITCH: 2000 LBS. TRAILER WEIGHT & 200 LBS. TONGUE WEIGHT.
*****DO NOT EXCEED VEHICLE MANUFACTURER'S RECOMMENDED TOWING CAPACITY.*****

Parts List			
ITEM	QTY	PART NUMBER	DESCRIPTION
1	1	1/2"	FISHWIRE TOOL
2	4	1/2 - 13 x 2"	CARRIAGE BOLT
3	2	CM-SP48	.250 x 2.13 x 2.13" SQUARE HOLE SPACER
4	4	HFN 1213	HEX FLANGE NUT
5	1	CM-SP12	.250 x 1.00 x 2.00" SQUARE HOLE SPACER
6	1	CM-SP32	.188 x 1.50 x 2.00" ROUND HOLE SPACER
7	3	CM-SP20	.250 x 1.50 x 4.00" SQUARE HOLE SPACER
8	1	CM-SP6	.250 x 1.00 x 3.00" SQUARE HOLE SPACER

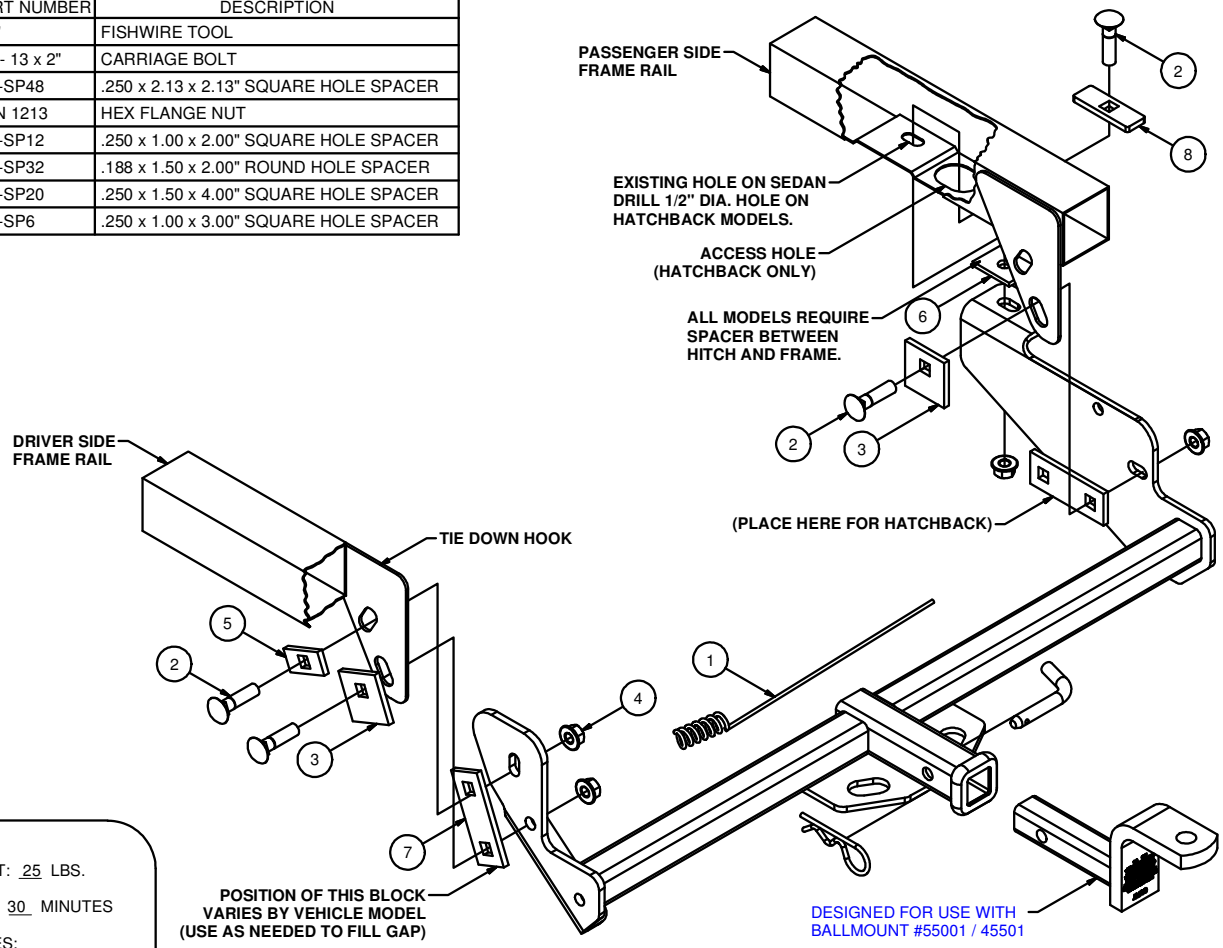

HITCH WEIGHT: 25 LBS.

INSTALL TIME: 30 MINUTES

INSTALL NOTES:

-DRILLING REQUIRED

INSTALLATION STEPS

1) Raise hitch into position.
Notes: (1)The driver's side plate is positioned inboard of the tie down hook and the passenger's side plate is positioned outboard of tie down hook.
(2) Placement of the two hole block varies with vehicle model.

2) Install carriage bolts and blocks through vehicle tie down hooks as shown and loosely install flange nuts provided.

Sedan Models:
3) Fishwire carriage bolt and block through end of frame fail and into existing hole in frame.

4) Install remaining fasteners as shown. Torque all 1/2" hardware to 110 lb.-ft.

Hatchback Models:
3) Using hitch as template drill 1/2" hole in the slotted hole toward front of vehicle in side plate, on the passenger's side.

4) Fishwire carriage bolt and block through access hole on bottom of frame rail.

5) Install remaining fasteners as shown. Torque all 1/2" hardware to 110 lb.-ft.

PERIODICALLY CHECK THIS RECEIVER HITCH TO ENSURE THAT ALL FASTENERS ARE TIGHT AND THAT ALL STRUCTURAL COMPONENTS ARE SOUND.

Curt Manufacturing Inc., warrants this product to be free of defects in material and/or workmanship at the time of retail purchase by the original purchaser. If the product is found to be defective, Curt Manufacturing Inc., may repair or replace the product, at their option, when the product is returned, prepaid, with proof of purchase. Alteration to, misuse of, or improper installation of this product voids the warranty. Curt Manufacturing Inc.'s liability is limited to repair or replacement of products found to be defective, and specifically excludes liability for incidental or consequential loss or damage.