11303 HYUNDAI ELANTRA SEDAN/COUPE

1/6/2015

GROSS LOAD CAPACITY WHEN USED AS A WEIGHT CARRYING HITCH: 2,000 LBS. TRAILER WEIGHT & 200 LBS. TONGUE WEIGHT.

DO NOT EXCEED VEHICLE MANUFACTURER'S RECOMMENDED TOWING CAPACITY.

WARNING: ALL NON-TRAILER LOADS APPLIED TO THIS PRODUCT MUST BE SUPPORTED BY 18050 STABILIZING STRAPS.

** FAILURE TO PROPERLY SUPPORT NON-TRAILER LOADS WILL VOID PRODUCT WARRANTY**

HAVING INSTALLATION QUESTIONS? CALL TECHNICAL SUPPORT AT 1-800-798-0813

Parts List

ITEM	QTY	PART NUMBER	DESCRIPTION
1	3	1/2-13 x 1 1/2	CARRIAGE BOLT
2	3	HFN 1213	HEX FLANGE NUT
3	2	CM-SP6	.250 x 1.00 x 3.00" SQUARE HOLE SPACER
4	1	CM-SP4	.250 x 1.50 x 3.00" SQUARE HOLE SPACER
5	1	1_2 FISHWIRE	1/2" FISHWIRE

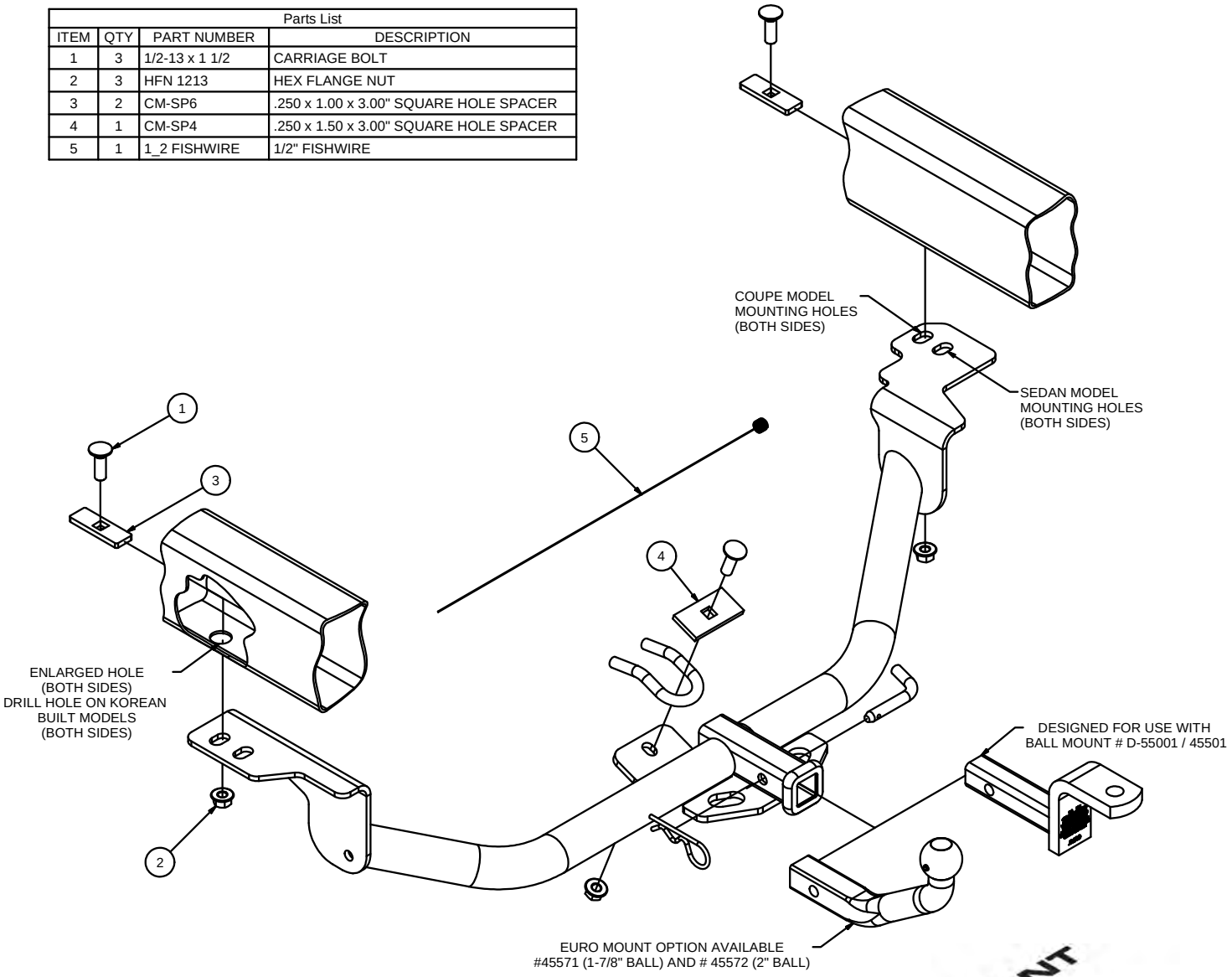

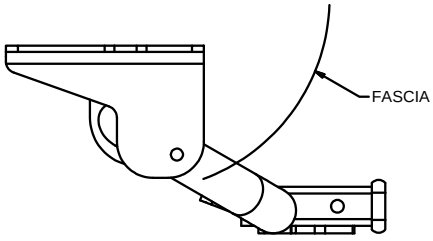

INSTALLED HITCH POSITION

HITCH WEIGHT: 33 LBS.

INSTALL TIME

PROFESSIONAL: 30 MINUTES

NOVICE (DIY): 60 MINUTES

INSTALL NOTES:

- HOLE ENLARGMENT REQUIRED
- DRILL HOLE ON KOREAN BUILT MODELS
- LOWER EXHAUST
- FISHWIRE HARDWARE

PERIODICALLY CHECK THIS RECEIVER HITCH TO ENSURE THAT ALL FASTENERS ARE TIGHT AND THAT ALL STRUCTURAL COMPONENTS ARE SOUND.

Curt Manufacturing Inc., warrants this product to be free of defects in material and/or workmanship at the time of retail purchase by the original purchaser. If the product is found to be defective, Curt Manufacturing Inc., may repair or replace the product, at their option, when the product is returned, prepaid, with proof of purchase. Alteration to, misuse of, or improper installation of this product voids the warranty. Curt Manufacturing Inc.'s liability is limited to repair or replacement of products found to be defective, and specifically excludes liability for incidental or consequential loss or damage.

11303 HYUNDAI ELANTRA SEDAN/COUPE

HAVING INSTALLATION QUESTIONS? CALL TECHNICAL SUPPORT AT 1-800-798-0813

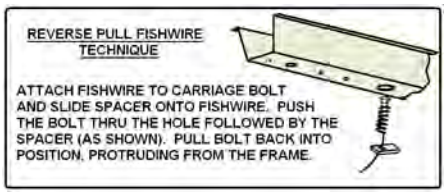

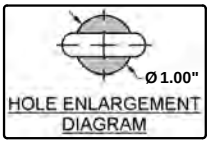

TOOLS REQUIRED
SOCKET WRENCH
TORQUE WRENCH
3/4 SOCKET
10 mm SOCKET
DIE GRINDER
SCREWDRIVER
SHEARS

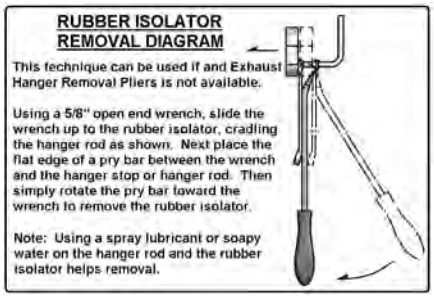

INSTALLATION STEPS

1. Lower exhaust to ease installation. (SEE RUBBER ISOLATOR REMOVAL DIAGRAM)
2. Remove heat shield from passenger side.
3. If model is equipped: Remove plastic from driver side using a screwdriver and a 10mm socket. Keep hardware to reattach panel after hitch installation.
4. Locate and remove rear rubber cap from driver and passenger side frame rail. (Discard cap on Sedan vehicles only.)
5. Enlarge driver and passenger side mounting holes enough to allow 1/2-13 carriage bolts and CM-SP6 spacers to pass through. (SEE HOLE ENLARGEMENT DIAGRAM.)
   NOTE: Korean built models only. Raise hitch into position using hitch as a template, mark and drill holes large enough to allow 1/2-13 carriage bolts and CM-SP6 spacers to pass through.
   Coupe models: Also enlarge 1/4" hole to allow for 1/2" carriage bolt.
6. Reverse fishwire 1/2-13 carriage bolts and CM-SP6 spacers through the enlarged access hole, both sides. (SEE REVERSE FISHWIRE TECHNIQUE.)
7. Reinstall heat shield on passenger side.
8. Install 1/2-13 carriage bolt and CM-SP4 spacer through top of existing vehicle tow loop, as shown.
9. Raise hitch into position by raising passenger side of hitch over exhaust first. (The heat shield will be sandwiched between the side plate and frame rail.) Then raise driver side of hitch.
   Loosely install 1/2-13 flanged nut onto carriage bolt from step 7.
10. Loosely install 1/2-13 flanged nut onto carriage bolt from both side rails.
11. Torque 1/2-13 hardware to 110 lb-ft.
12. On Coupe models, trim plastic on driver side of vehicle as shown and reinstall back into position.
13. Raise exhaust back into position.

PERIODICALLY CHECK THIS RECEIVER HITCH TO ENSURE THAT ALL FASTENERS ARE TIGHT AND THAT ALL STRUCTURAL COMPONENTS ARE SOUND.

Curt Manufacturing Inc., warrants this product to be free of defects in material and/or workmanship at the time of retail purchase by the original purchaser. If the product is found to be defective, Curt Manufacturing Inc., may repair or replace the product, at their option, when the product is returned, prepaid, with proof of purchase. Alteration to, misuse of, or improper installation of this product voids the warranty. Curt Manufacturing Inc.'s liability is limited to repair or replacement of products found to be defective, and specifically excludes liability for incidental or consequential loss or damage.

11303 INSTALLATION INSTRUCTIONS

Safety glasses should be worn at all times while installing this product.

YEARS: 2011-PRESENT | **MAKE:** HYUNDAI | **MODEL:** ELANTRA | **STYLE:** SEDAN/COUPE

WARNING: NEVER EXCEED YOUR VEHICLE MANUFACTURER'S RECOMMENDED TOWING CAPACITY

WEIGHT CARRYING:

TRAILER WEIGHT: 2,000 LBS.
TONGUE WEIGHT: 200 LBS.

WARNING:
WE RECOMMEND THE USE OF 18050 STABILIZING STRAPS FOR ALL NON-TRAILER (WHEEL-LESS) LOADS. PLEASE SEE THE CURT CATALOG OR VISIT US ONLINE AT WWW.CURTMFG.COM FOR FURTHER INFORMATION.

INSTALLATION TIME: 30 MIN.

THE INSTALL TIME LISTED IS FOR PROFESSIONAL INSTALLERS. IF YOU ARE HESITANT TO UNDERTAKE THIS TASK ON YOUR OWN, CONTACT AN AUTHORIZED CURT INSTALLER FOR ADDITIONAL ASSISTANCE.

INSTALLATION REQUIRES:


DIE GRINDER


RATCHET


TORQUE WRENCH


3/4"
10mm
SOCKET


SAFETY GLASSES


AVIATION SHEARS
(COUPE MODELS)


MARKER
(COUPE MODELS)


SCREW DRIVER
(COUPE MODELS)

INSTALLATION TIPS:

1. *BEFORE YOU BEGIN INSTALLATION, READ ALL INSTRUCTIONS THOROUGHLY.*
2. *TO EASE INSTALLATION, 2 PEOPLE MAY BE REQUIRED.*
3. *USING PROPER TOOLS WILL GREATLY IMPROVE THE QUALITY OF THE INSTALL AND REDUCE THE TIME REQUIRED.*
4. *NEED HELP OR HAVE SOME QUESTIONS? CALL TECHNICAL SUPPORT AT 800.798.0813*

LEVEL OF DIFFICULTY: MODERATE

EASY | MODERATE | CHALLENGING

	HOLE ENLARGEMENT
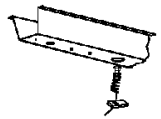	REVERSE FISHWIRE
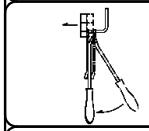	REMOVE RUBBER ISOLATORS FROM MUFFLER TO LOWER THE EXHAUST
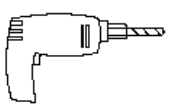	DRILL HOLES ON KOREAN BUILT MODELS (1 PER SIDE) (SEE VEHICLE DOOR STICKER FOR BUILD LOCATION)
 (COUPE MODELS)	PLASTIC TRIMMING

VEHICLE PHOTO:



REPRESENTATIVE PHOTO

HITCH ILLUSTRATION:

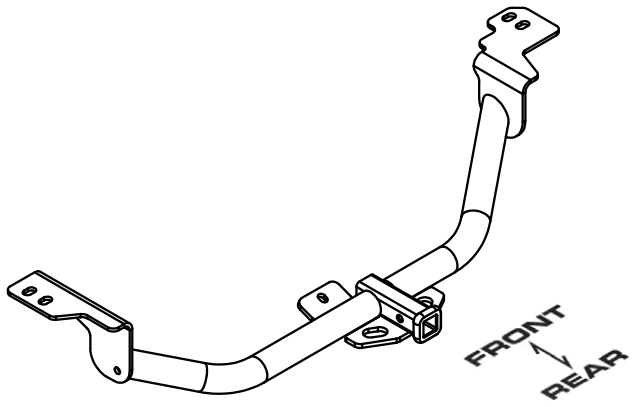

MAKE SURE YOUR HITCH MATCHES

PERIODICALLY CHECK THIS RECEIVER HITCH TO ENSURE ALL FASTENERS ARE TIGHT AND ALL STRUCTURAL COMPONENTS ARE SOUND

CURT Manufacturing LLC. warrants this product to be free of defects in material and/or workmanship at the time of retail purchase by the original purchaser. If the product is found to be defective, Curt Manufacturing LLC. may repair or replace the product at their option, when the product is returned, prepaid, with proof of purchase. Alteration to, misuse of, or improper installation of this product voids the warranty. Curt Manufacturing LLC.'s liability is limited to repair or replacement of products found to be defective, and specifically excludes liability for incidental or consequential loss or damage.

For more information log onto www.curtmfg.com, & for helpful towing tips log onto www.hitchinfo.com

1/6/2015

INSTALLATION WALKTHROUGH:

Parts List			
ITEM	QTY	PART NUMBER	DESCRIPTION
1	2	CM-SP6	.250 x 1.00 x 3.00" SQUARE HOLE SPACER
2	1	CM-SP4	.250 x 1.50 x 3.00" SQUARE HOLE SPACER
3	3	1/2-13 x 1 1/2	CARRIAGE BOLT
4	3	HFN 1213	HEX FLANGE NUT
5	1	1_2 FISHWIRE	1/2" FISHWIRE

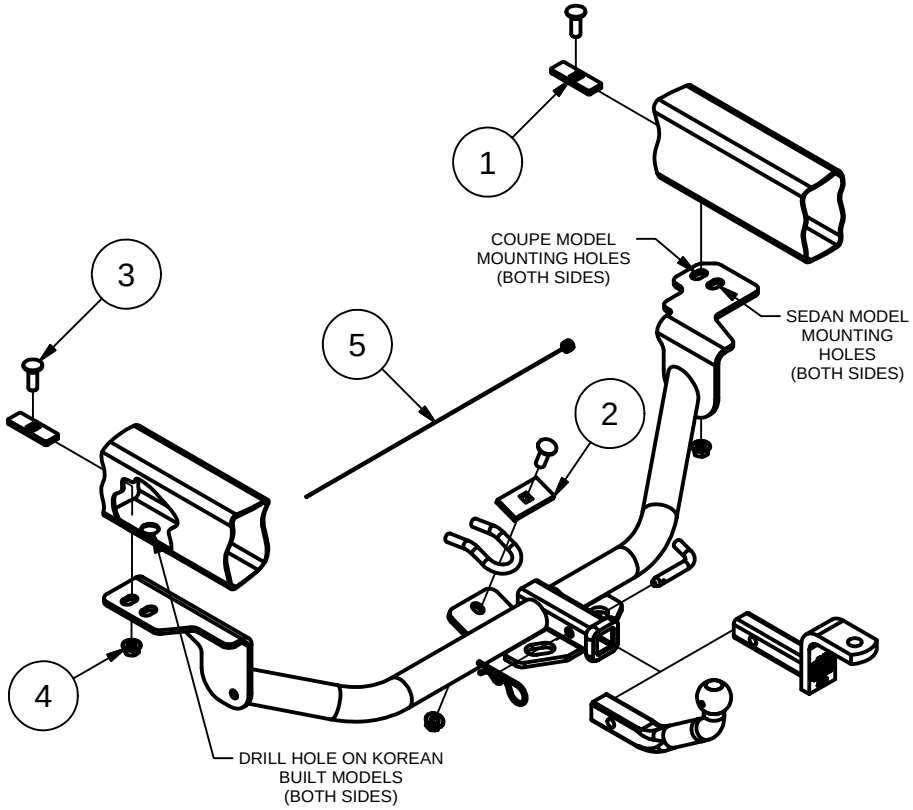

1. Lower exhaust to ease installation.

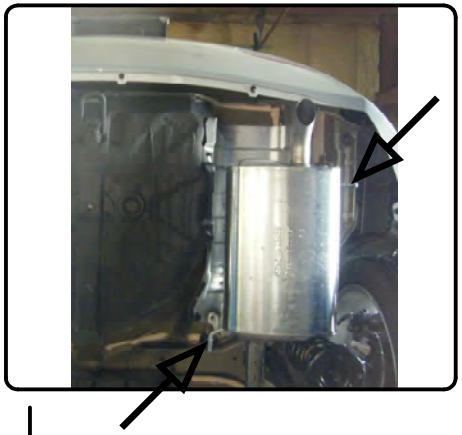

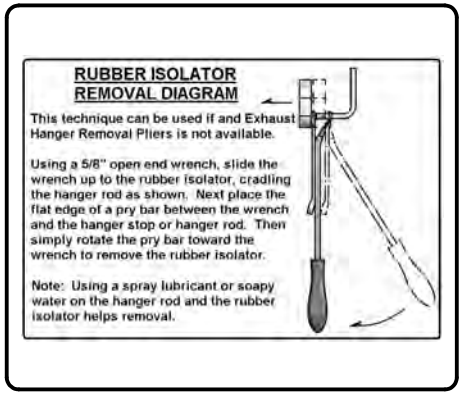

2. Remove heat shield from passenger side





For more information log onto www.curtmfg.com, & for helpful towing tips log onto www.hitchinfo.com

INSTALLATION WALKTHROUGH:

3. If model is equipped:
   Remove plastic from driver side using a screwdriver and a 10mm socket. Keep hardware to reattach panel after hitch installation.





4. Locate and remove rear rubber cap from driver and passenger side frame rail. (Discard cap on Sedan vehicles only.)

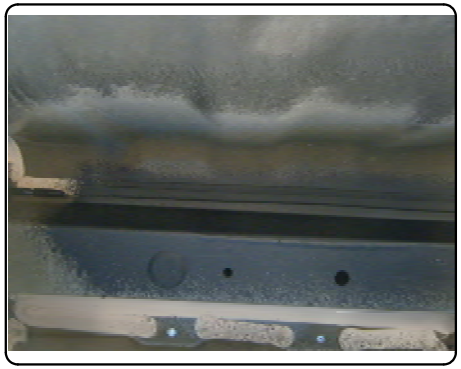



5. Enlarge driver and passenger side mounting holes enough to allow 1/2-13 carriage bolts and CM-SP6 spacers to pass through. (SEE HOLE ENLARGEMENT DIAGRAM.) **NOTE:** Korean built models only. Raise hitch into position using hitch as a template, mark and drill holes large enough to allow 1/2-13 carriage bolts and CM-SP6 spacers to pass through. Coupe models: Also enlarge 1/4" hole to allow for 1/2" carriage bolt.



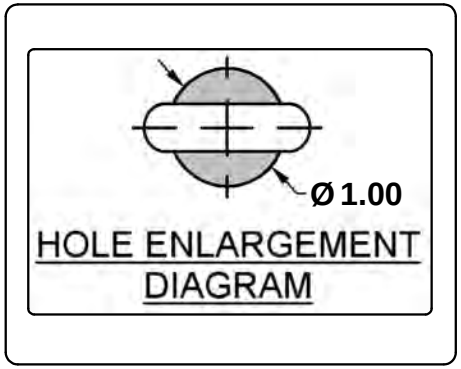

6. Reverse fishwire 1/2-13 carriage bolts and CM-SP6 spacers through the enlarged access hole, both sides.



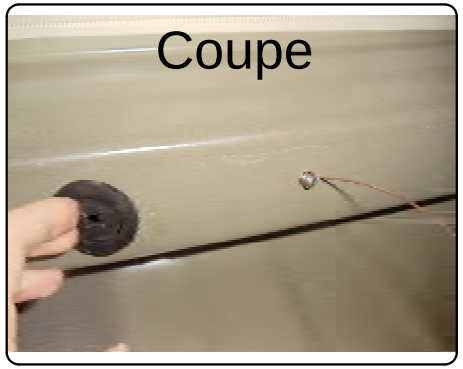

For more information log onto www.curtmfg.com, & for helpful towing tips log onto www.hitchinfo.com

INSTALLATION WALKTHROUGH:

7. Reinstall heat shield on passenger side.





8. Install 1/2-13 carriage bolt and CM-SP4 spacer through top of existing vehicle tow loop, as shown.

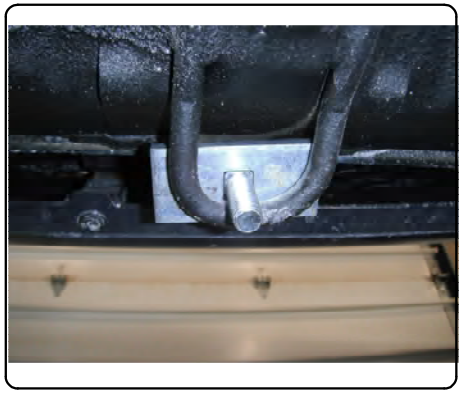



9. Raise hitch into position by raising passenger side of hitch over exhaust first. (The heat shield will be sandwich between the side plate and frame rail.) Loosely install 1/2-13 flanged nut onto carriage bolt from step 7.





10. Loosely install 1/2-13 flanged nut onto carriage bolt from both frame rails.





For more information log onto www.curtmfg.com, & for helpful towing tips log onto www.hitchinfo.com

INSTALLATION WALKTHROUGH:

11. Torque 1/2-13 hardware to 110 lb-ft.





12. On Coupe models, trim plastic on drivers side of vehicle as shown and reinstall back into position.

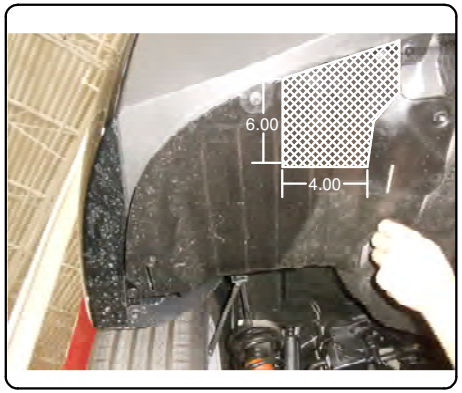



13. Raise exhaust back into position.





14. Installation is now complete.



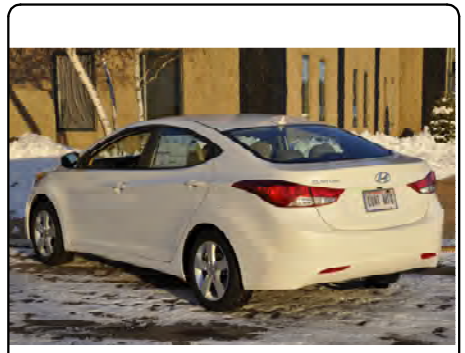

For more information log onto www.curtmfg.com, & for helpful towing tips log onto www.hitchinfo.com

TOWING SAFETY INFORMATION

Gross Trailer Weight / GTW

The Gross Trailer Weight is the weight of the trailer & cargo.
Measure this by putting the fully loaded trailer on a vehicle scale.

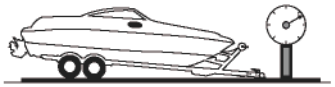

Tongue Weight / TW

The downward force that is exerted on the hitch ball by the coupler. The tongue weight will vary depending on where the load is positioned in relationship to the trailer axle(s). To measure the tongue weight, use either a commercial scale or a bathroom scale with the coupler at towing height. When using a bathroom scale with heavier tongue weights, use the method shown and multiply the scale reading by 3.

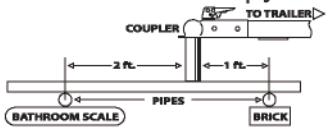

Weight Carrying / WC

The total weight of both the trailer and the cargo inside.
Never exceed the weight capacity of your trailer hitch.

Weight Distribution / WD

Used to balance the weight of the cargo between the front and rear wheels throughout the trailer, allowing for better steering, braking, and level riding.



Sway Control

A device used to reduce the lateral movements of the trailer that are caused by the wind. This works in conjunction with a weight distribution hitch. Do not use this on a class 1 or 2 hitch, or with surge brakes.

How Much Can You Safely Tow?

TONGUE WEIGHT lbs	1000	2000	3000	4000	5000	6000	7000	8000	10,000	12,000
Tongue weight should be about 10 to 15 percent of the gross trailer weight.	CLASS 1									
	CLASS 2									
	CLASS 3									
	CLASS 4									
TRAILER TYPE	CLASS 5									
Camper	11'	12'	13'	14'	15'	16'				
lbs	1100	1200	1300	1400	1500	1600				
Vacation	14'	16'	18'	20'	22'	24'	26'	28'	30'	32'
lbs	2100	2400	2700	3000	3300	3600	3900	4200	4500	4800
Vacation	14'	16'	18'	20'	22'	24'	26'	28'	30'	32'
lbs	2800	3200	3600	4000	4400	4800	5200	5600	6000	6400
5th Wheel										

Refer to owner's manual for towing capabilities and limitations.

Ball Mount

The ball mount is placed inside the opening of the receiver hitch which is mounted to the vehicle. Make sure a hitch pin and clip is properly securing the ball mount to the receiver hitch before you begin towing.

- **A**: Rise. **B**: Drop. **C**: Hole Size. **D**: Length.

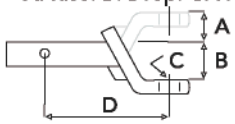

Trailer Ball

The connection from the hitch to the trailer. There are many factors that determine the correct hitch ball:

- Number one is the hitch ball's gross trailer weightrating.
- The mounting platform must be at least 3/8" thick.
- The hole diameter must not be more than 1/16" larger than the threaded shank.
- Every time you tow, check the nut and lock washer to make sure they are fastened securely.
- **A**: Ball Dia. **B**: Shank Dia. **C**: Shank Length. **D**: Shank Rise.

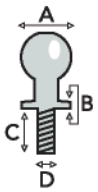

Coupler

The component that is placed over the trailer ball to connect the vehicle to the trailer. Be sure that the coupler size matches the size of the hitch ball and that the coupler handle is securely fastened. To determine what size hitch ball you need for your application you will need to know the size of coupler that is on the trailer. Be sure your coupler is properly adjusted to the ball you are using.
NOTE: For added security the use of safety devices such as Coupler Safety Pins and Locks is strongly recommended.

Safety Chains

Safety chains are a requirement and should be crossed under the tongue of the trailer so that the tongue will not drop to the road if it becomes separated from the hitch. Always leave enough slack so you can turn. Never allow the safety chains to drag on the ground and never attach the chains to the bumper.
Trailer Classification: Safety Chain Breaking Force - Minimum
Class 1: 2,000 lbs. (8.9 kN)
Class 2: 3,500 lbs. (15.6 kN)
Class 3: 5,000 lbs. (22.2 kN)
The strength rating of each length of safety chain or its equivalent and its attachments shall be equal to or exceed in minimum breaking force the GVWR (Gross Vehicle Weight Rating) of the trailer.

Electrical

Trailer lights, Electric Brakes, Break-away systems - Every time you tow, be sure to check that all components are working properly.

Wiring identification by color:

