11344 AUDI A6 SERIES SEDAN & WAGON (INCL. QUATTRO)

10/15/2012

GROSS LOAD CAPACITY WHEN USED AS A WEIGHT CARRYING HITCH: 2,000 LBS. TRAILER WEIGHT & 200 LBS. TONGUE WEIGHT.
*****DO NOT EXCEED VEHICLE MANUFACTURER'S RECOMMENDED TOWING CAPACITY.*****
WARNING: ALL NON-TRAILER LOADS APPLIED TO THIS PRODUCT MUST BE SUPPORTED BY 18050 STABILIZING STRAPS.
**** FAILURE TO PROPERLY SUPPORT NON-TRAILER LOADS WILL VOID PRODUCT WARRANTY****
HAVING INSTALLATION QUESTIONS? CALL TECHNICAL SUPPORT AT 1-800-798-0813

Parts List

ITEM	QTY	PART NUMBER	DESCRIPTION
1	2	HFN 1213	HEX FLANGE NUT
2	1	1/2-13 x 1 1/4	CARRIAGE BOLT
3	4	M8-1.25	HEX FLANGE NUT
4	1	1/2-13 x 3 1/2"	HEX BOLT
5	1	CM-11344-MT	.250" MOUNT

TOOLS REQUIRED
RATCHET
10" EXTENSION
T55 TORX SOCKET
13mm SOCKET
3/4" SOCKET
3/4" WRENCH
TORQUE WRENCH

RUBBER ISOLATOR REMOVAL DIAGRAM

This technique can be used if and Exhaust Hanger Removal Pliers is not available.

Using a 5/8" open end wrench, slide the wrench up to the rubber isolator, cradling the hanger rod as shown. Next place the flat edge of a pry bar between the wrench and the hanger stop or hanger rod. Then simply rotate the pry bar toward the wrench to remove the rubber isolator.

Note: Using a spray lubricant or soapy water on the hanger rod and the rubber isolator helps removal.



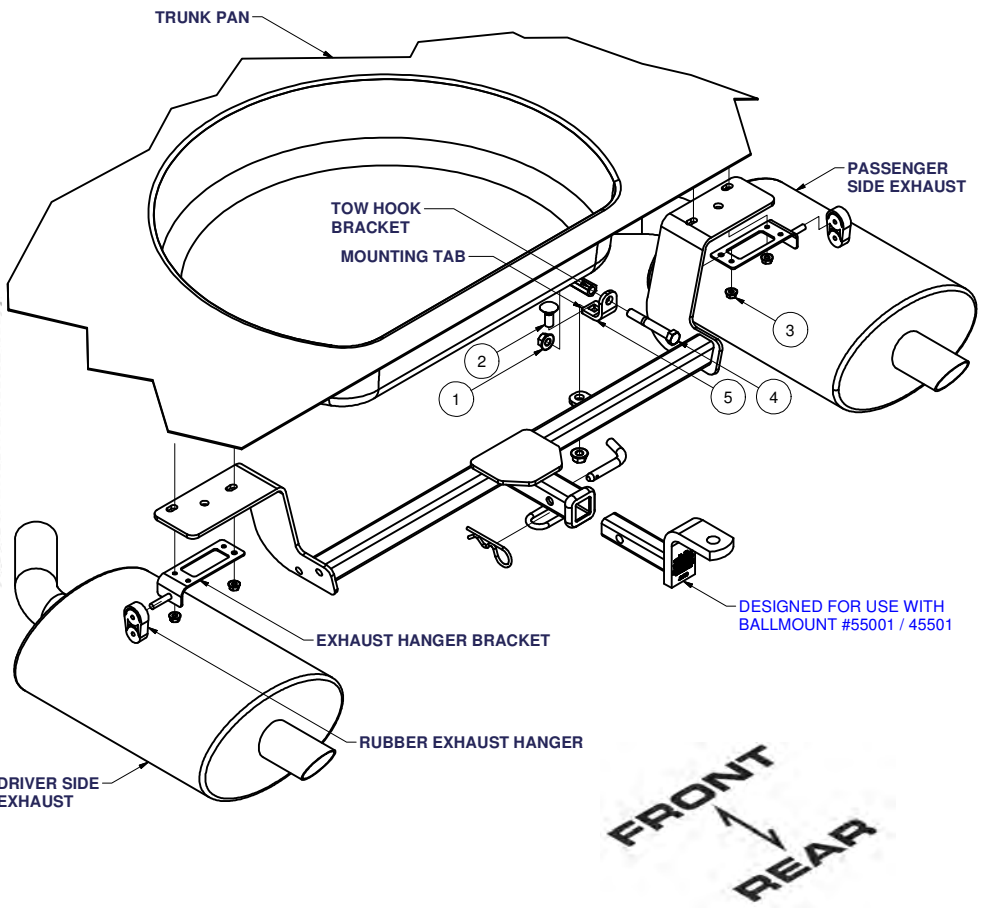

HITCH WEIGHT: 24 LBS.

INSTALL TIME

PROFESSIONAL: 30 MINUTES

NOVICE (DIY): 60 MINUTES

INSTALL NOTES:

- LOWER/RAISE MUFFLER HANGERS

INSTALLATION STEPS

1. Lower exhaust by removing the exhaust hanger brackets on the driver and passenger side as shown. (reinstall later). For ease of installation lower (2) front hangers and (2) cross braces under exhaust.

2. Insert carriage bolt into CM-11344-MT mounting tab. Secure mounting tab to tow hook bracket using 1/2" hex bolt and flange nut. Torque to 110 lb-ft.

3. Raise hitch into position over exhaust on to existing studs. Secure hitch to mounting tab with 1/2" flange nut. Reinstall exhaust hanger brackets onto studs sandwiching hitch between brackets and vehicle. Secure with 8mm flange nuts removed in Step 1.

4. Torque all 1/2" fasteners to 110 ft - lbs and 8mm fasteners to 23 ft - lbs.

5. Reinstall rubber exhaust hangers and mufflers into original location.

PERIODICALLY CHECK THIS RECEIVER HITCH TO ENSURE THAT ALL FASTENERS ARE TIGHT AND THAT ALL STRUCTURAL COMPONENTS ARE SOUND.

Curt Manufacturing Inc., warrants this product to be free of defects in material and/or workmanship at the time of retail purchase by the original purchaser. If the product is found to be defective, Curt Manufacturing Inc., may repair or replace the product, at their option, when the product is returned, prepaid, with proof of purchase. Alteration to, misuse of, or improper installation of this product voids the warranty. Curt Manufacturing Inc.'s liability is limited to repair or replacement of products found to be defective, and specifically excludes liability for incidental or consequential loss or damage.