11356 INSTALLATION INSTRUCTIONS

Safety glasses should be worn at all times while installing this product.

YEARS: 2014	MAKE: MAZDA	MODEL: 6	STYLE: SEDAN

WARNING: NEVER EXCEED YOUR VEHICLE MANUFACTURER'S RECOMMENDED TOWING CAPACITY

WEIGHT CARRYING:

TRAILER WEIGHT: 2,000 LBS.
TONGUE WEIGHT: 200 LBS.

WARNING:
WE RECOMMEND THE USE OF 18050 STABILIZING STRAPS FOR ALL NON-TRAILER (WHEEL-LESS) LOADS. PLEASE SEE THE CURT CATALOG OR VISIT US ONLINE AT WWW.CURTMFG.COM FOR FURTHER INFORMATION.

PRO INSTALL TIME: **20 MIN.**
NOVICE INSTALL TIME: **40 MIN.**

IF YOU ARE HESITANT TO UNDERTAKE THIS TASK ON YOUR OWN, CONTACT AN AUTHORIZED CURT INSTALLER FOR ADDITIONAL ASSISTANCE.

INSTALLATION REQUIRES:

 SAFETY GLASSES	 RATCHET	 3/4" SOCKET
 6" SOCKET EXTENSION	 TORQUE WRENCH	

INSTALLATION TIPS:

1. *BEFORE YOU BEGIN INSTALLATION, READ ALL INSTRUCTIONS THOROUGHLY.*
2. *TO EASE INSTALLATION, 2 PEOPLE MAY BE REQUIRED.*
3. *USING PROPER TOOLS WILL GREATLY IMPROVE THE QUALITY OF THE INSTALL AND REDUCE THE TIME REQUIRED.*
4. *NEED HELP OR HAVE SOME QUESTIONS? CALL TECHNICAL SUPPORT AT 800.798.0813*

LEVEL OF DIFFICULTY: EASY

EASY | ***MODERATE*** | ***CHALLENGING***

	NO DRILLING REQUIRED
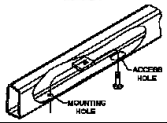	FISHWIRING REQUIRED

VEHICLE PHOTO:



REPRESENTATIVE PHOTO

HITCH ILLUSTRATION:

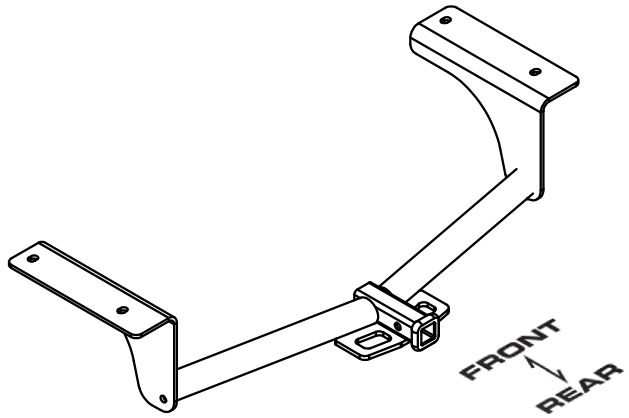

MAKE SURE YOUR HITCH MATCHES

PERIODICALLY CHECK THIS RECEIVER HITCH TO ENSURE ALL FASTENERS ARE TIGHT AND ALL STRUCTURAL COMPONENTS ARE SOUND

CURT Manufacturing LLC. warrants this product to be free of defects in material and/or workmanship at the time of retail purchase by the original purchaser. If the product is found to be defective, Curt Manufacturing LLC. may repair or replace the product at their option, when the product is returned, prepaid, with proof of purchase. Alteration to, misuse of, or improper installation of this product voids the warranty. Curt Manufacturing LLC.'s liability is limited to repair or replacement of products found to be defective, and specifically excludes liability for incidental or consequential loss or damage.

For more information log onto www.curtmfg.com, & for helpful towing tips log onto www.hitchinfo.com

INSTALLATION WALKTHROUGH:

Parts List			
ITEM	QTY	PART NUMBER	DESCRIPTION
1	4	HFN 1213, GR8	HEX FLANGE NUT
2	4	CM-SP6	.250 x 1.00 x 3.00" SQUARE HOLE SPACER
3	4	1/2-13 x 1 1/2, GR8	CARRIAGE BOLT
4	4	1_2 FISHWIRE	1/2" FISHWIRE

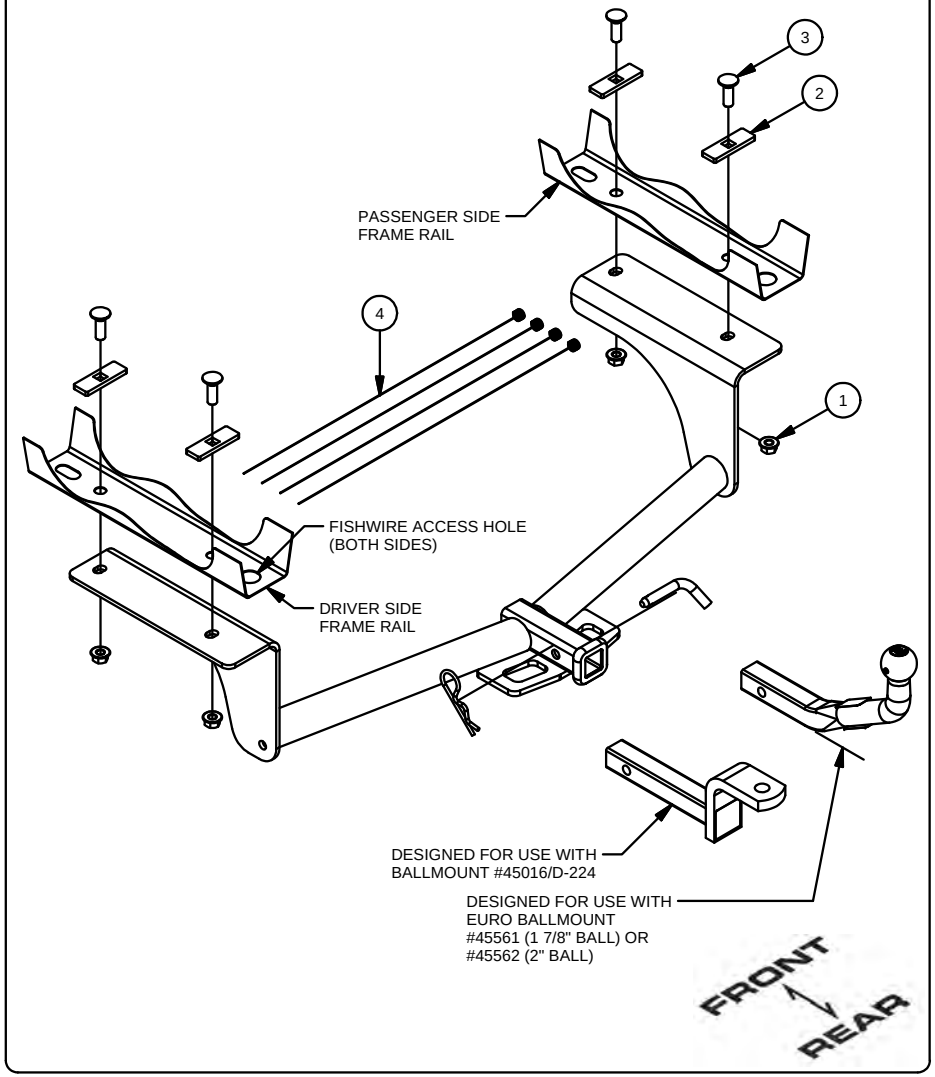

1) Fishwire the four (4) 1/2-13 carriage bolts and the CM-SP6 spacers into the vehicle frame through the access holes as shown. Refer to the "Fishwire Technique" diagram.



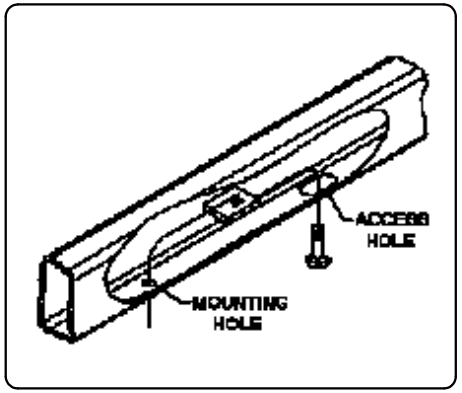

2) Raise the hitch into position, being careful not to push the bolts up into the vehicle frame.

3) Remove the fishwire from the bolts and secure the hitch into position using the 1/2-13 hex flange nuts.





For more information log onto www.curtmfg.com, & for helpful towing tips log onto www.hitchinfo.com

INSTALLATION WALKTHROUGH:

4) Torque all 1/2-13 fasteners to 110 lb-ft.



Installation is complete.



For more information log onto www.curtmfg.com, & for helpful towing tips log onto www.hitchinfo.com

11356 MAZDA 6

2/20/13

GROSS LOAD CAPACITY WHEN USED AS A WEIGHT CARRYING HITCH: 2,000 LBS. TRAILER WEIGHT & 200 LBS. TONGUE WEIGHT.
*****DO NOT EXCEED VEHICLE MANUFACTURER'S RECOMMENDED TOWING CAPACITY.*****
WARNING: ALL NON-TRAILER LOADS APPLIED TO THIS PRODUCT MUST BE SUPPORTED BY 18050 STABILIZING STRAPS.
**** FAILURE TO PROPERLY SUPPORT NON-TRAILER LOADS WILL VOID PRODUCT WARRANTY****
HAVING INSTALLATION QUESTIONS? CALL TECHNICAL SUPPORT AT 1-800-798-0813

Parts List

ITEM	QTY	PART NUMBER	DESCRIPTION
1	4	HFN 1213, GR8	HEX FLANGE NUT
2	4	CM-SP6	.250 x 1.00 x 3.00" SQUARE HOLE SPACER
3	4	1/2-13 x 1 1/2, GR8	CARRIAGE BOLT
4	4	1_2 FISHWIRE	1/2" FISHWIRE

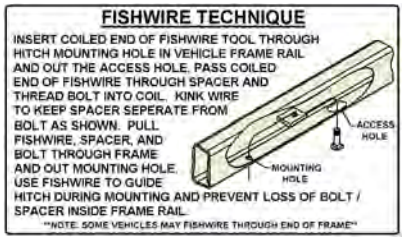

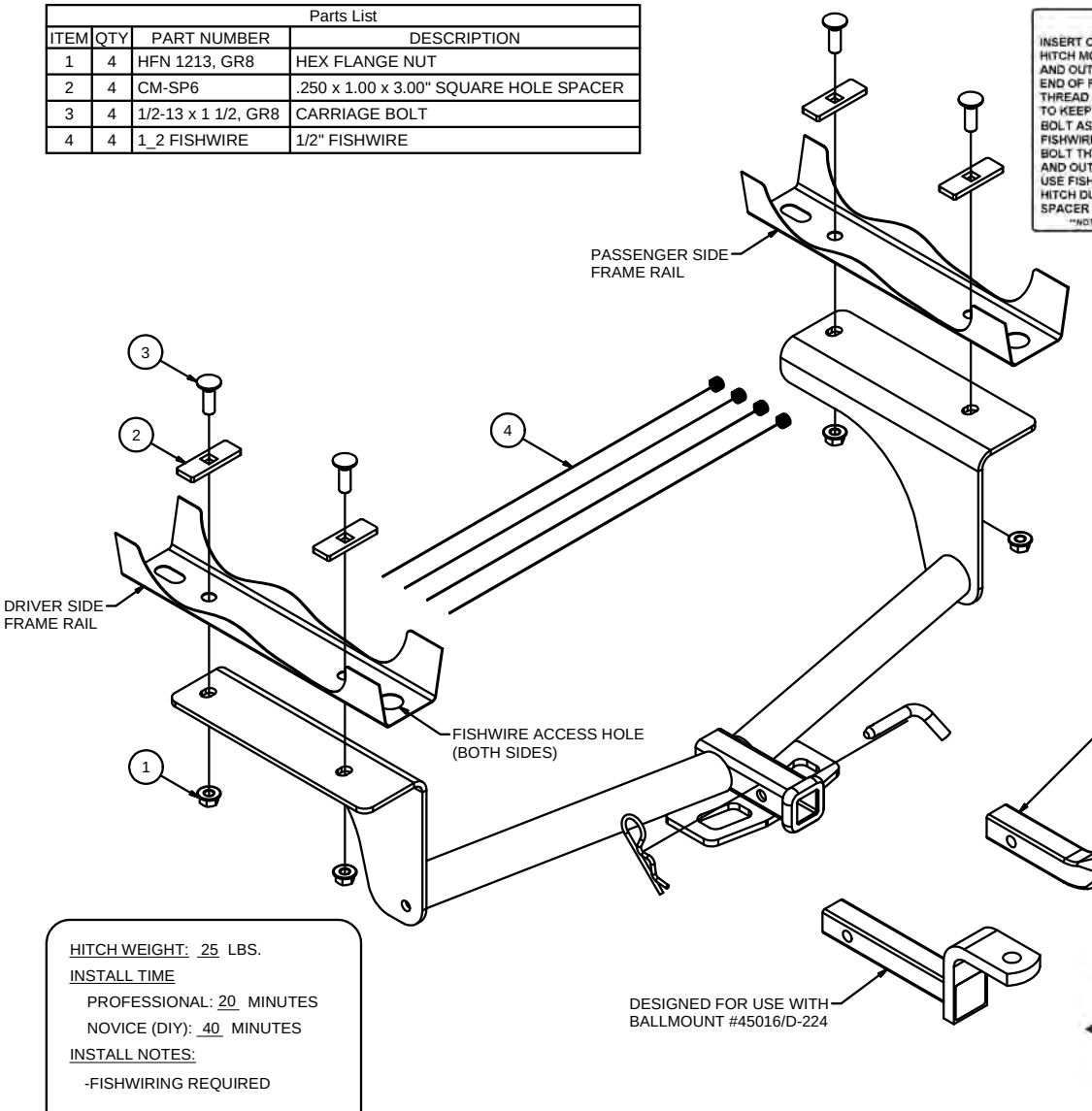

TOOLS REQUIRED
RATCHET
3/4" SOCKET
6" SOCKET EXTENSION
TORQUE WRENCH

HITCH WEIGHT: 25 LBS.
INSTALL TIME
PROFESSIONAL: 20 MINUTES
NOVICE (DIY): 40 MINUTES
INSTALL NOTES:
-FISHWIRING REQUIRED



INSTALLATION STEPS

1) Fishwire the four (4) 1/2-13 carriage bolts and the CM-SP6 spacers into the vehicle frame through the access holes. Refer to the "Fishwire Technique" diagram.

2) Raise the hitch into position, being careful not to push the bolts up into the vehicle frame.

3) Remove the fishwire from the bolts and secure the hitch into position using the 1/2-13 hex flange nuts.

4) Torque all 1/2-13 fasteners to 110 lb-ft.

PERIODICALLY CHECK THIS RECEIVER HITCH TO ENSURE THAT ALL FASTENERS ARE TIGHT AND THAT ALL STRUCTURAL COMPONENTS ARE SOUND.

Curt Manufacturing LLC., warrants this product to be free of defects in material and/or workmanship at the time of retail purchase by the original purchaser. If the product is found to be defective, Curt Manufacturing LLC., may repair or replace the product, at their option, when the product is returned, prepaid, with proof of purchase. Alteration to, misuse of, or improper installation of this product voids the warranty. Curt Manufacturing LLC.'s liability is limited to repair or replacement of products found to be defective, and specifically excludes liability for incidental or consequential loss or damage.