11370 NISSAN SENTRA 2.0

3/22/2016

GROSS LOAD CAPACITY WHEN USED AS A WEIGHT CARRYING HITCH: 2,000 LBS. TRAILER WEIGHT & 200 LBS. TONGUE WEIGHT.

DO NOT EXCEED VEHICLE MANUFACTURER'S RECOMMENDED TOWING CAPACITY.

WARNING: ALL NON-TRAILER LOADS APPLIED TO THIS PRODUCT MUST BE SUPPORTED BY AUXILIARY STABILIZING STRAPS.

** FAILURE TO PROPERLY SUPPORT NON-TRAILER LOADS WILL VOID PRODUCT WARRANTY**

HAVING INSTALLATION QUESTIONS? CALL TECHNICAL SUPPORT AT 1-800-798-0813

Parts List

ITEM	QTY	PART NUMBER	DESCRIPTION
1	2	1/2-13 x 1 1/2	CARRIAGE BOLT
2	2	7/16-14 x 1	CARRIAGE BOLT
3	2	CM-SP7	.250 x 1.00 x 2.00" SQUARE HOLE SPACER
4	2	7/16-14	HEX FLANGE NUT
5	2	HFN 1213	HEX FLANGE NUT
6	2	7_16 FISHWIRE	7/16" FISHWIRE
7	1	11370-TPS	.250" TRUNK PAN SPACER

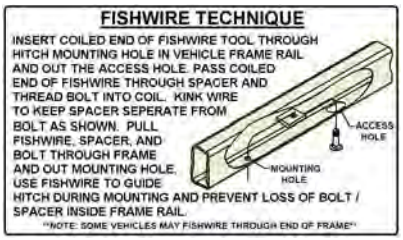

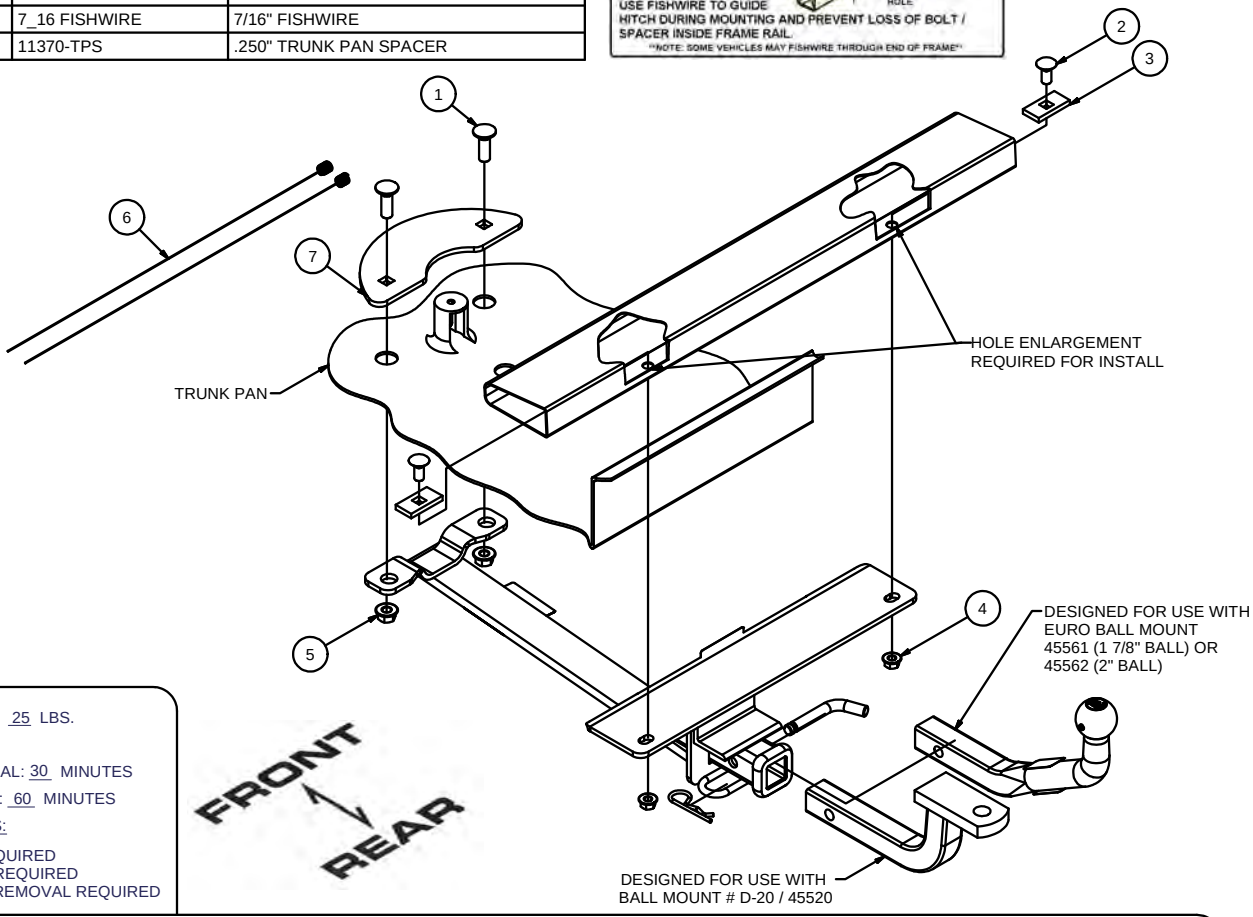

HITCH WEIGHT: 25 LBS.

INSTALL TIME

PROFESSIONAL: 30 MINUTES

NOVICE (DIY): 60 MINUTES

INSTALL NOTES:

-DRILLING REQUIRED
-FISHWIRING REQUIRED
-SPARE TIRE REMOVAL REQUIRED

INSTALLATION STEPS

1) Remove spare tire from trunk, remove rubber plugs.
2) Install trunk pan spacer with (2) 1/2" carriage bolts.
3) Enlarge two holes in bumper beam which line up with outer two holes in hitch plate.
4) Fishwire (2) 7/16" carriage bolts with SP7 spacers from end of bumper beam to enlarged holes.
5) Raise hitch into position and finger tighten in place with (2) 1/2" and (2) 7/16" flange nuts.
6) Torque all 7/16" hardware to 70 ft.-lb. and all 1/2" hardware to 110 ft.-lb.
7) Return spare tire to trunk.

PERIODICALLY CHECK THIS RECEIVER HITCH TO ENSURE THAT ALL FASTENERS ARE TIGHT AND THAT ALL STRUCTURAL COMPONENTS ARE SOUND.

Curt Manufacturing Inc., warrants this product to be free of defects in material and/or workmanship at the time of retail purchase by the original purchaser. If the product is found to be defective, Curt Manufacturing Inc., may repair or replace the product, at their option, when the product is returned, prepaid, with proof of purchase. Alteration to, misuse of, or improper installation of this product voids the warranty. Curt Manufacturing Inc.'s liability is limited to repair or replacement of products found to be defective, and specifically excludes liability for incidental or consequential loss or damage.