11377 INSTALLATION INSTRUCTIONS

Safety glasses should be worn at all times while installing this product.

YEARS: 2014 | **MAKE: MAZDA** | **MODEL: MAZDA3** | **STYLE: SEDAN & HATCH**

WARNING: NEVER EXCEED YOUR VEHICLE MANUFACTURER'S RECOMMENDED TOWING CAPACITY

WEIGHT CARRYING:

TRAILER WEIGHT:	2,000 LBS.
TONGUE WEIGHT:	200 LBS.

WARNING:
WE RECOMMEND THE USE OF 18050 STABILIZING STRAPS FOR ALL NON-TRAILER (WHEEL-LESS) LOADS. PLEASE SEE THE CURT CATALOG OR VISIT US ONLINE AT WWW.CURTMFG.COM FOR FURTHER INFORMATION.

PRO INSTALL TIME: **45 MIN.**
NOVICE INSTALL TIME: **90 MIN.**

IF YOU ARE HESITANT TO UNDERTAKE THIS TASK ON YOUR OWN, CONTACT AN AUTHORIZED CURT INSTALLER FOR ADDITIONAL ASSISTANCE.

INSTALLATION REQUIRES:

 3/4" SOCKET	 RATCHET	 MASKING TAPE
 TORQUE WRENCH	 6" SOCKET EXTENSION	 SAFETY GLASSES
 TAPE MEASURE	 AVIATION SHEARS	

INSTALLATION TIPS:

1. *BEFORE YOU BEGIN INSTALLATION, READ ALL INSTRUCTIONS THOROUGHLY.*
2. *TO EASE INSTALLATION, 2 PEOPLE MAY BE REQUIRED.*
3. *USING PROPER TOOLS WILL GREATLY IMPROVE THE QUALITY OF THE INSTALL AND REDUCE THE TIME REQUIRED.*
4. *NEED HELP OR HAVE SOME QUESTIONS? CALL TECHNICAL SUPPORT AT 800.798.0813*

LEVEL OF DIFFICULTY: EASY

EASY | ***MODERATE*** | ***CHALLENGING***

	NO DRILLING REQUIRED
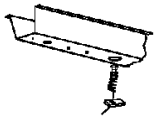	REVERSE PULL (2) BOLTS AND SPACERS
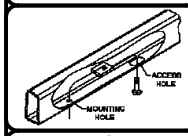	FISHWIRE (2) BOLTS AND SPACERS
	TEMPORARILY LOWER EXHAUST (HATCHBACK MODELS ONLY)
	TRIM LOWER BUMPER COVER (SEDAN MODELS ONLY)

VEHICLE PHOTO:



REPRESENTATIVE PHOTO

HITCH ILLUSTRATION:

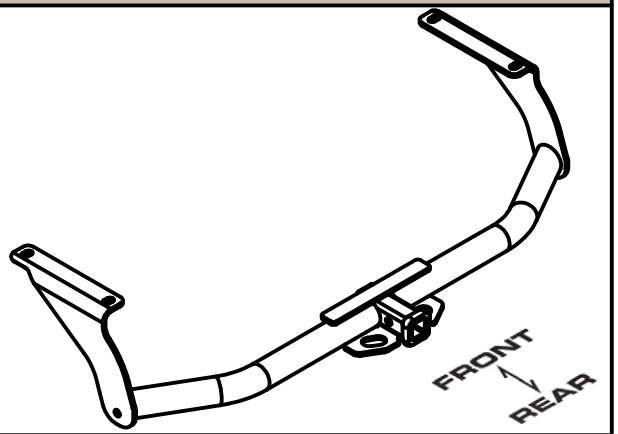

MAKE SURE YOUR HITCH MATCHES

PERIODICALLY CHECK THIS RECEIVER HITCH TO ENSURE ALL FASTENERS ARE TIGHT AND ALL STRUCTURAL COMPONENTS ARE SOUND

CURT Manufacturing LLC. warrants this product to be free of defects in material and/or workmanship at the time of retail purchase by the original purchaser. If the product is found to be defective, Curt Manufacturing LLC. may repair or replace the product at their option, when the product is returned, prepaid, with proof of purchase. Alteration to, misuse of, or improper installation of this product voids the warranty. Curt Manufacturing LLC.'s liability is limited to repair or replacement of products found to be defective, and specifically excludes liability for incidental or consequential loss or damage.

For more information log onto www.curtmfg.com, & for helpful towing tips log onto www.hitchinfo.com

10/22/13

INSTALLATION WALKTHROUGH:

Parts List			
ITEM	QTY	PART NUMBER	DESCRIPTION
1	4	1_2 FISHWIRE	1/2" FISHWIRE
2	4	CM-SP6	.250 x 1.00 x 3.00" SQUARE HOLE SPACER
3	4	1/2-13 x 1 1/2, GR8	CARRIAGE BOLT
4	4	HFN 1213, GR8	HEX FLANGE NUT

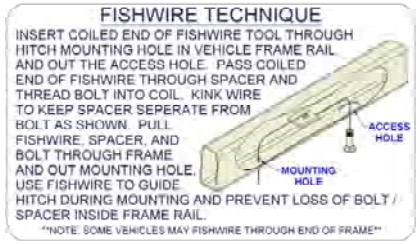

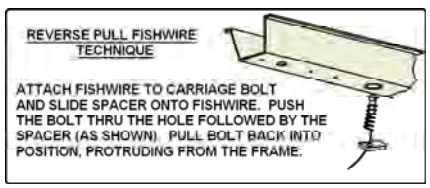

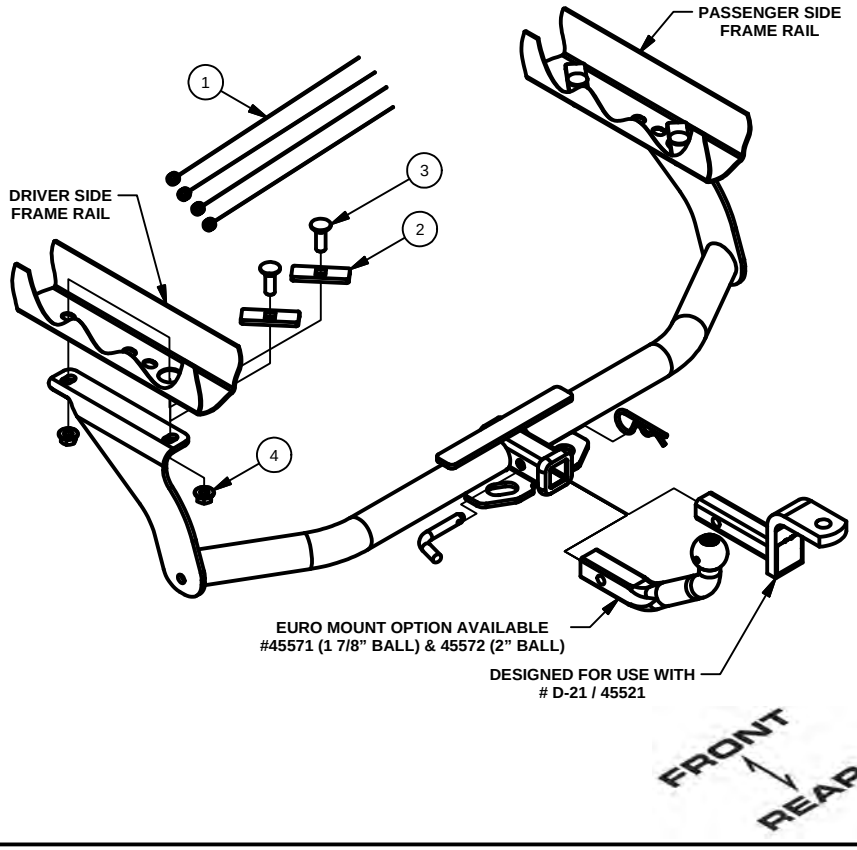

1) On hatchback models, lower exhaust by removing (4) rubber isolators from the muffler.



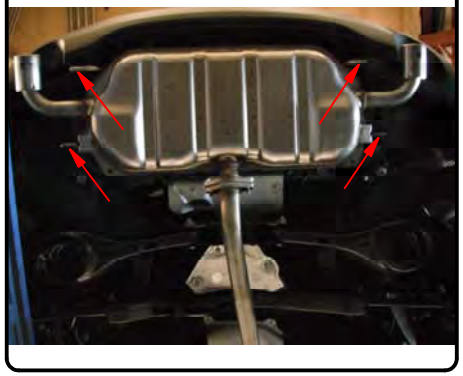

2) Remove the tape if present from the forward most attachment point and fishwire the (2) supplied carriage bolts and (2) sp-6 spacers on both sides. Reverse pull the remaining (2) bolts and (2) spacers on both sides into the rearward attachment holes. Leave the wires on temporarily while raising hitch (refer to diagrams to the left for fishwiring techniques).





For more information log onto www.curtmfg.com, & for helpful towing tips log onto www.hitchinfo.com

INSTALLATION WALKTHROUGH:

3) On sedan models, trim the lower bumper cover as shown in the diagram below (both sides).

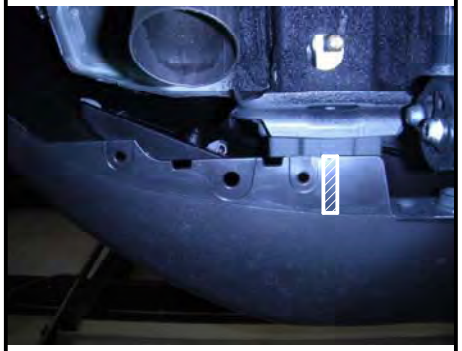



4) Thread the fishwires though the corresponding holes in the hitch and raise into position. Remove fishwires and loosely install the (4) supplied hex flange nuts.





5) Raise the exhaust back into position, one side at a time, if lowered and reinstall isolators.





6) Torque all 1/2" fasteners to 110 lb-ft.





For more information log onto www.curtmfg.com, & for helpful towing tips log onto www.hitchinfo.com

TOWING SAFETY INFORMATION

Gross Trailer Weight / GTW

The Gross Trailer Weight is the weight of the trailer & cargo.
Measure this by putting the fully loaded trailer on a vehicle scale.

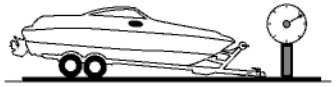

Tongue Weight / TW

The downward force that is exerted on the hitch ball by the coupler. The tongue weight will vary depending on where the load is positioned in relationship to the trailer axle(s). To measure the tongue weight, use either a commercial scale or a bathroom scale with the coupler at towing height. When using a bathroom scale with heavier tongue weights, use the method shown and multiply the scale reading by 3.

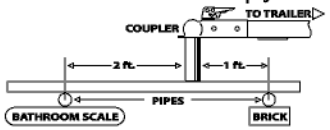

Weight Carrying / WC

The total weight of both the trailer and the cargo inside.
Never exceed the weight capacity of your trailer hitch.

Weight Distribution / WD

Used to balance the weight of the cargo between the front and rear wheels throughout the trailer, allowing for better steering, braking, and level riding.



Sway Control

A device used to reduce the lateral movements of the trailer that are caused by the wind. This works in conjunction with a weight distribution hitch. Do not use this on a class 1 or 2 hitch, or with surge brakes.

How Much Can You Safely Tow?

TONGUE WEIGHT lbs	1000	2000	3000	4000	5000	6000	7000	8000	10,000	12,000
Tongue weight should be about 10 to 15 percent of the gross trailer weight.	CLASS 1									
	CLASS 2									
	CLASS 3									
TRAILER TYPE	CLASS 4									
	CLASS 5									
Camper	11'	12'	13'	14'	15'	16'				
lbs	1100	1200	1300	1400	1500	1600				
Vacation	14'	16'	18'	20'	22'	24'	26'	28'	30'	32'
lbs	2100	2400	2700	3000	3300	3600	3900	4200	4500	4800
Vacation	14'	16'	18'	20'	22'	24'	26'	28'	30'	32'
lbs	2800	3200	3600	4000	4400	4800	5200	5600	6000	6400
5th Wheel	*Refer to owner's manual for towing capabilities and limitations.*									

Ball Mount

The ball mount is placed inside the opening of the receiver hitch which is mounted to the vehicle. Make sure a hitch pin and clip is properly securing the ball mount to the receiver hitch before you begin towing.

- **A:** Rise. **B:** Drop. **C:** Hole Size. **D:** Length.

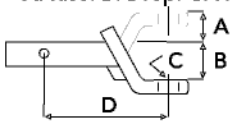

Trailer Ball

The connection from the hitch to the trailer. There are many factors that determine the correct hitch ball:

- Number one is the hitch ball's gross trailer weight rating.
- The mounting platform must be at least 3/8" thick.
- The hole diameter must not be more than 1/16" larger than the threaded shank.
- Every time you tow, check the nut and lock washer to make sure they are fastened securely.
- **A:** Ball Dia. **B:** Shank Length. **C:** Shank Dia. **D:** Shank Rise.

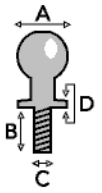

Coupler

The component that is placed over the trailer ball to connect the vehicle to the trailer. Be sure that the coupler size matches the size of the hitch ball and that the coupler handle is securely fastened. To determine what size hitch ball you need for your application you will need to know the size of coupler that is on the trailer. Be sure your coupler is properly adjusted to the ball you are using.
NOTE: For added security the use of safety devices such as Coupler Safety Pins and Locks is strongly recommended.

Safety Chains

Safety chains are a requirement and should be crossed under the tongue of the trailer so that the tongue will not drop to the road if it becomes separated from the hitch. Always leave enough slack so you can turn. Never allow the safety chains to drag on the ground and never attach the chains to the bumper.
Trailer Classification: Safety Chain Breaking Force - Minimum
Class 1: 2,000 lbs. (8.9 kN)
Class 2: 3,500 lbs. (15.6 kN)
Class 3: 5,000 lbs. (22.2 kN)
The strength rating of each length of safety chain or its equivalent and its attachments shall be equal to or exceed in minimum breaking force the GVWR (Gross Vehicle Weight Rating) of the trailer.

Electrical

Trailer lights, Electric Brakes, Break-away systems - Every time you tow, be sure to check that all components are working properly.
Wiring identification by color:

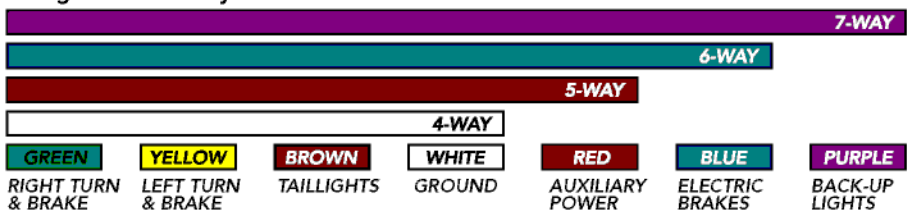

CURT DISCLAIMER: WIRING COLOR SHOWN WORK IN CONJUNCTION WITH CURT MANUFACTURING PRODUCTS.

11377 MAZDA MAZDA3 (SEDAN AND HATCHBACK)

10/21/2013

GROSS LOAD CAPACITY WHEN USED AS A WEIGHT CARRYING HITCH: 2,000 LBS. TRAILER WEIGHT & 200 LBS. TONGUE WEIGHT.

DO NOT EXCEED VEHICLE MANUFACTURER'S RECOMMENDED TOWING CAPACITY.

WARNING: ALL NON-TRAILER LOADS APPLIED TO THIS PRODUCT MUST BE SUPPORTED BY 18050 STABILIZING STRAPS.

** FAILURE TO PROPERLY SUPPORT NON-TRAILER LOADS WILL VOID PRODUCT WARRANTY**

HAVING INSTALLATION QUESTIONS? CALL TECHNICAL SUPPORT AT 1-800-798-0813

Parts List			
ITEM	QTY	PART NUMBER	DESCRIPTION
1	4	1_2 FISHWIRE	1/2" FISHWIRE
2	4	CM-SP6	.250 x 1.00 x 3.00" SQUARE HOLE SPACER
3	4	1/2-13 x 1 1/2, GR8	CARRIAGE BOLT
4	4	HFN 1213, GR8	HEX FLANGE NUT

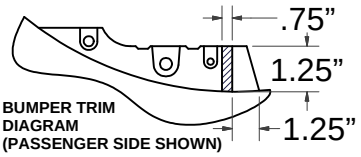

BUMPER TRIM DIAGRAM (PASSENGER SIDE SHOWN)

RUBBER ISOLATOR REMOVAL DIAGRAM

This technique can be used if an Exhaust Hanger Removal Pliers is not available.

Using a 5/8" open end wrench, slide the wrench up to the rubber isolator, cradling the hanger rod as shown. Next place the flat edge of a pry bar between the wrench and the hanger stop or hanger rod. Then simply rotate the pry bar toward the wrench to remove the rubber isolator.

Note: Using a spray lubricant or soapy water on the hanger rod and the rubber isolator helps removal.

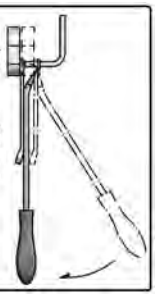

FISHWIRE TECHNIQUE

INSERT COILED END OF FISHWIRE TOOL THROUGH HITCH MOUNTING HOLE IN VEHICLE FRAME RAIL AND OUT THE ACCESS HOLE. PASS COILED END OF FISHWIRE THROUGH SPACER AND THREAD BOLT INTO COIL. KINK WIRE TO KEEP SPACER SEPERATE FROM BOLT AS SHOWN. PULL FISHWIRE, SPACER, AND BOLT THROUGH FRAME AND OUT MOUNTING HOLE. USE FISHWIRE TO GUIDE HITCH DURING MOUNTING AND PREVENT LOSS OF BOLT / SPACER INSIDE FRAME RAIL.

"NOTE: SOME VEHICLES MAY FISHWIRE THROUGH END OF FRAME"

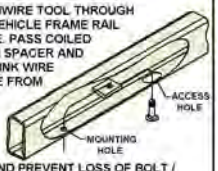

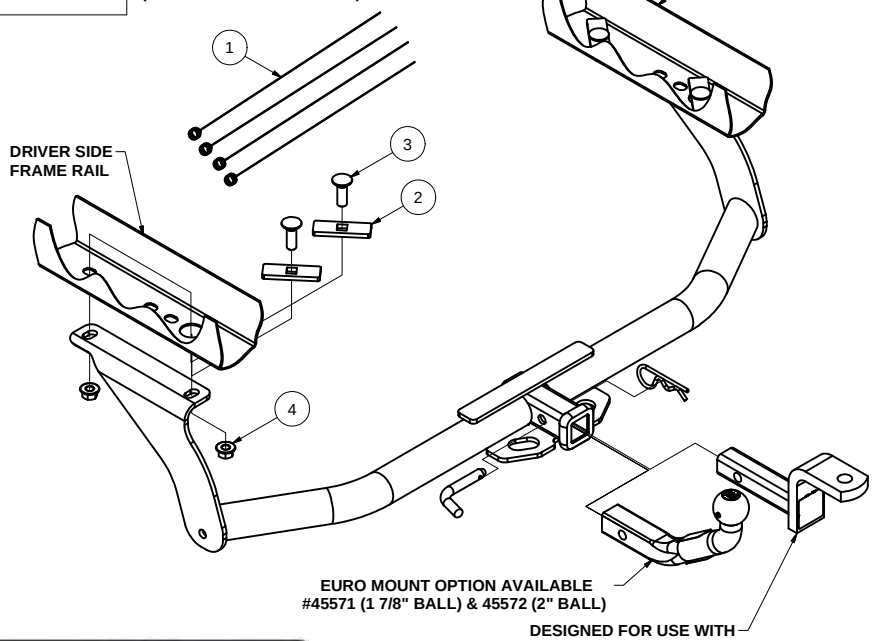

HITCH WEIGHT: 28 LBS.

INSTALL TIME

PROFESSIONAL: 45 MINUTES

NOVICE (DIY): 90 MINUTES

INSTALL NOTES:

- **LOWER EXHAUST**
- **FISHWIRE FASTENERS**
- **NO DRILLING REQUIRED**

REVERSE PULL FISHWIRE TECHNIQUE

ATTACH FISHWIRE TO CARRIAGE BOLT AND SLIDE SPACER ONTO FISHWIRE. PUSH THE BOLT THRU THE HOLE FOLLOWED BY THE SPACER (AS SHOWN). PULL BOLT BACK INTO POSITION, PROTRUDING FROM THE FRAME.

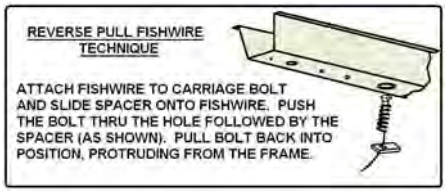



INSTALLATION STEPS

1) On hatchback models, lower exhaust by removing (4) rubber isolators from the muffler.

2) Remove the tape if present from the forward most attachment point and fishwire the (2) supplied carriage bolts and (2) sp-6 spacers on both sides. Reverse pull the remaining (2) bolts and (2) spacers on both sides into the rearward attachment holes. Leave the wires on temporarily while raising hitch (refer to diagrams above for fishwiring techniques).

3) On sedan models, trim the lower bumper cover as shown in the diagram above (both sides).

4) Thread the fishwires though the corresponding holes in the hitch and raise into position. Remove fishwires and loosely install the (4) supplied hex flange nuts.

5) Raise the exhaust back into position, one side at a time, if lowered and reinstall isolators.

6) Torque all 1/2” fasteners to 110 lb-ft.

PERIODICALLY CHECK THIS RECEIVER HITCH TO ENSURE THAT ALL FASTENERS ARE TIGHT AND THAT ALL STRUCTURAL COMPONENTS ARE SOUND.

Curt Manufacturing LLC., warrants this product to be free of defects in material and/or workmanship at the time of retail purchase by the original purchaser. If the product is found to be defective, Curt Manufacturing LLC., may repair or replace the product, at their option, when the product is returned, prepaid, with proof of purchase. Alteration to, misuse of, or improper installation of this product voids the warranty. Curt Manufacturing LLC.'s liability is limited to repair or replacement of products found to be defective, and specifically excludes liability for incidental or consequential loss or damage.