11378 INSTALLATION INSTRUCTIONS

Safety glasses should be worn at all times while installing this product.

YEARS: 2014-PRESENT | **MAKE: NISSAN** | **MODEL: VERSA NOTE** | **STYLE: HATCHBACK**

WARNING: NEVER EXCEED YOUR VEHICLE MANUFACTURER'S RECOMMENDED TOWING CAPACITY

WEIGHT CARRYING:

TRAILER WEIGHT: 2,000 LBS.
TONGUE WEIGHT: 200 LBS.

WARNING:
WE RECOMMEND THE USE OF 18050 STABILIZING STRAPS FOR ALL NON-TRAILER (WHEEL-LESS) LOADS. PLEASE SEE THE CURT CATALOG OR VISIT US ONLINE AT WWW.CURTMFG.COM FOR FURTHER INFORMATION.

PRO INSTALL TIME: **15 MIN.**
NOVICE INSTALL TIME: **30 MIN.**

IF YOU ARE HESITANT TO UNDERTAKE THIS TASK ON YOUR OWN, CONTACT AN AUTHORIZED CURT INSTALLER FOR ADDITIONAL ASSISTANCE.

INSTALLATION REQUIRES:

 RATCHET	 TORQUE WRENCH	 11/16" 3/4" SOCKET
 SCREW DRIVER	 ROTARY TOOL	 SAFETY GLASSES

INSTALLATION TIPS:

1. *BEFORE YOU BEGIN INSTALLATION, READ ALL INSTRUCTIONS THOROUGHLY.*
2. *TO EASE INSTALLATION, 2 PEOPLE MAY BE REQUIRED.*
3. *USING PROPER TOOLS WILL GREATLY IMPROVE THE QUALITY OF THE INSTALL AND REDUCE THE TIME REQUIRED.*
4. *NEED HELP OR HAVE SOME QUESTIONS? CALL TECHNICAL SUPPORT AT 800.798.0813*

LEVEL OF DIFFICULTY: MODERATE

EASY | ***MODERATE*** | ***CHALLENGING***

	- NO DRILLING REQUIRED
 TRIM	- FASCIA TRIMMING REQUIRED

VEHICLE PHOTO:



REPRESENTATIVE PHOTO

HITCH ILLUSTRATION:

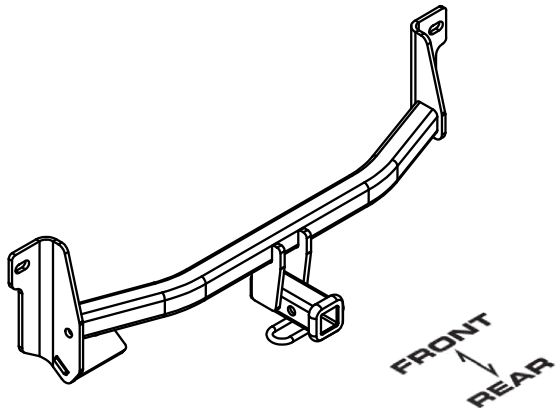

MAKE SURE YOUR HITCH MATCHES

PERIODICALLY CHECK THIS RECEIVER HITCH TO ENSURE ALL FASTENERS ARE TIGHT AND ALL STRUCTURAL COMPONENTS ARE SOUND

CURT Manufacturing LLC. warrants this product to be free of defects in material and/or workmanship at the time of retail purchase by the original purchaser. If the product is found to be defective, Curt Manufacturing LLC. may repair or replace the product at their option, when the product is returned, prepaid, with proof of purchase. Alteration to, misuse of, or improper installation of this product voids the warranty. Curt Manufacturing LLC.'s liability is limited to repair or replacement of products found to be defective, and specifically excludes liability for incidental or consequential loss or damage.

For more information log onto www.curtmfg.com, & for helpful towing tips log onto www.hitchinfo.com

10/30/2013

INSTALLATION WALKTHROUGH:

Parts List			
ITEM	QTY	PART NUMBER	DESCRIPTION
1	4	CM-SP16	.250 x 1.50 x 2.00" ROUND HOLE SPACER
2	1	1/2-13 x 1 3/4, GR8	CARRIAGE BOLT
3	2	7/16-14 x 1 1/2	CARRIAGE BOLT
4	1	HFN 1213, GR8	HEX FLANGE NUT
5	2	7/16-14	HEX FLANGE NUT

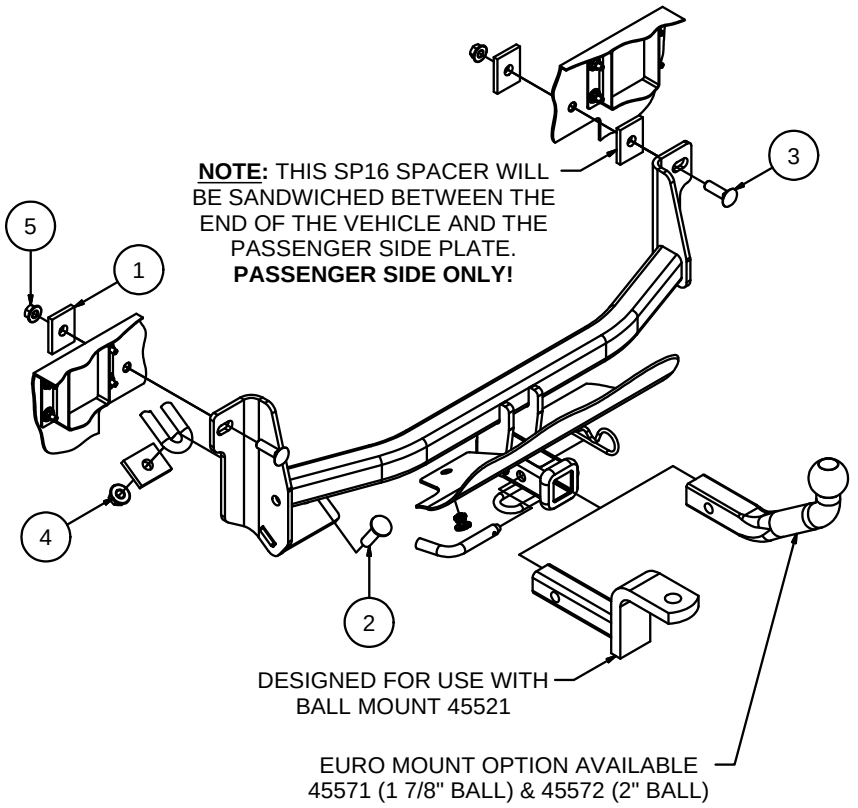

1. Remove (3) fascia fasteners. Retain fasteners for reinstallation.



2. Mark and trim rear fascia. **Note:** Dimensions are approximate, confirm fit prior to trimming.
See Fascia Trim Diagram

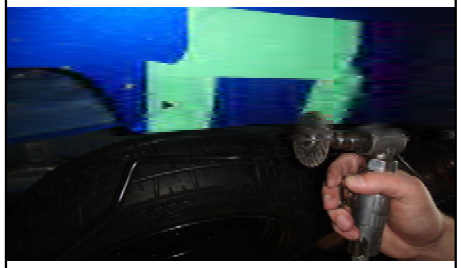

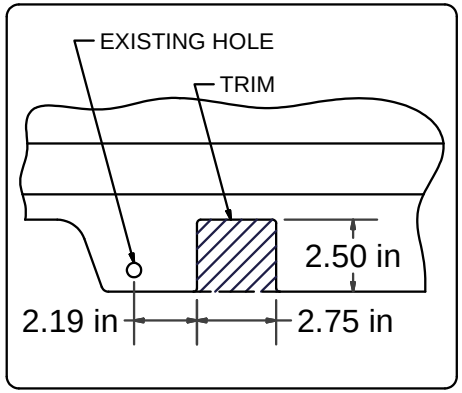

For more information log onto www.curtmfg.com, & for helpful towing tips log onto www.hitchinfo.com

INSTALLATION WALKTHROUGH:

3. Gently flex the bottom of the rear fascia back and raise hitch into position. Insert a 7/16"-14 x 1 1/2" carriage bolt through the driver side plate and out the existing hole. Insert a 7/16"-14 x 1 1/2" carriage bolt through the passenger side plate, a SP16 spacer, and out the existing hole. Secure both sides with a SP16 spacer and a 7/16"-14 hex flange nut.





4. Insert a 1/2"-13 x 1 3/4" carriage bolt through the tow loop plate and out the tow loop. Secure with a SP16 spacer and a 1/2"-13 hex flange nut.



5. Torque all 7/16" hardware to 70 ft-lbs.
   Torque all 1/2" hardware to 110 ft-lbs.
   Reinstall (3) fascia fasteners removed in Step (1).

   INSTALLATION COMPLETE

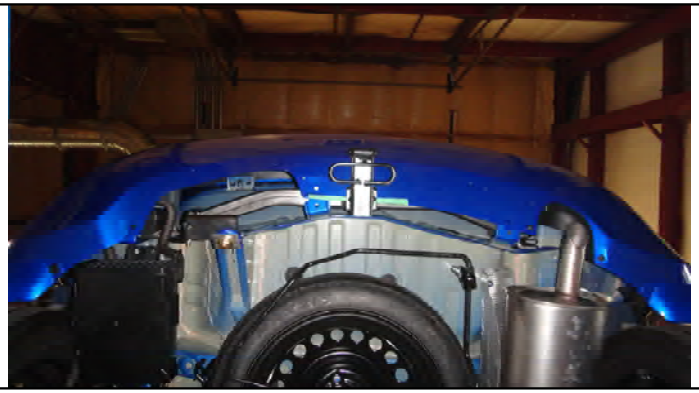



For more information log onto www.curtmfg.com, & for helpful towing tips log onto www.hitchinfo.com

11378 NISSAN VERSA NOTE

10/30/2013

GROSS LOAD CAPACITY WHEN USED AS A WEIGHT CARRYING HITCH: 2,000 LBS. TRAILER WEIGHT & 200 LBS. TONGUE WEIGHT.

DO NOT EXCEED VEHICLE MANUFACTURER'S RECOMMENDED TOWING CAPACITY.

WARNING: ALL NON-TRAILER LOADS APPLIED TO THIS PRODUCT MUST BE SUPPORTED BY 18050 STABILIZING STRAPS.

** FAILURE TO PROPERLY SUPPORT NON-TRAILER LOADS WILL VOID PRODUCT WARRANTY**

HAVING INSTALLATION QUESTIONS? CALL TECHNICAL SUPPORT AT 1-800-798-0813

Parts List			
ITEM	QTY	PART NUMBER	DESCRIPTION
1	4	CM-SP16	.250 x 1.50 x 2.00" ROUND HOLE SPACER
2	1	1/2-13 x 1 3/4, GR8	CARRIAGE BOLT
3	2	7/16-14 x 1 1/2	CARRIAGE BOLT
4	1	HFN 1213, GR8	HEX FLANGE NUT
5	2	7/16-14	HEX FLANGE NUT

TOOLS REQUIRED
RATCHET
TORQUE WRENCH
11/16" SOCKET
3/4" SOCKET
SCREW DRIVER
ROTARY TOOL
SAFETY GLASSES

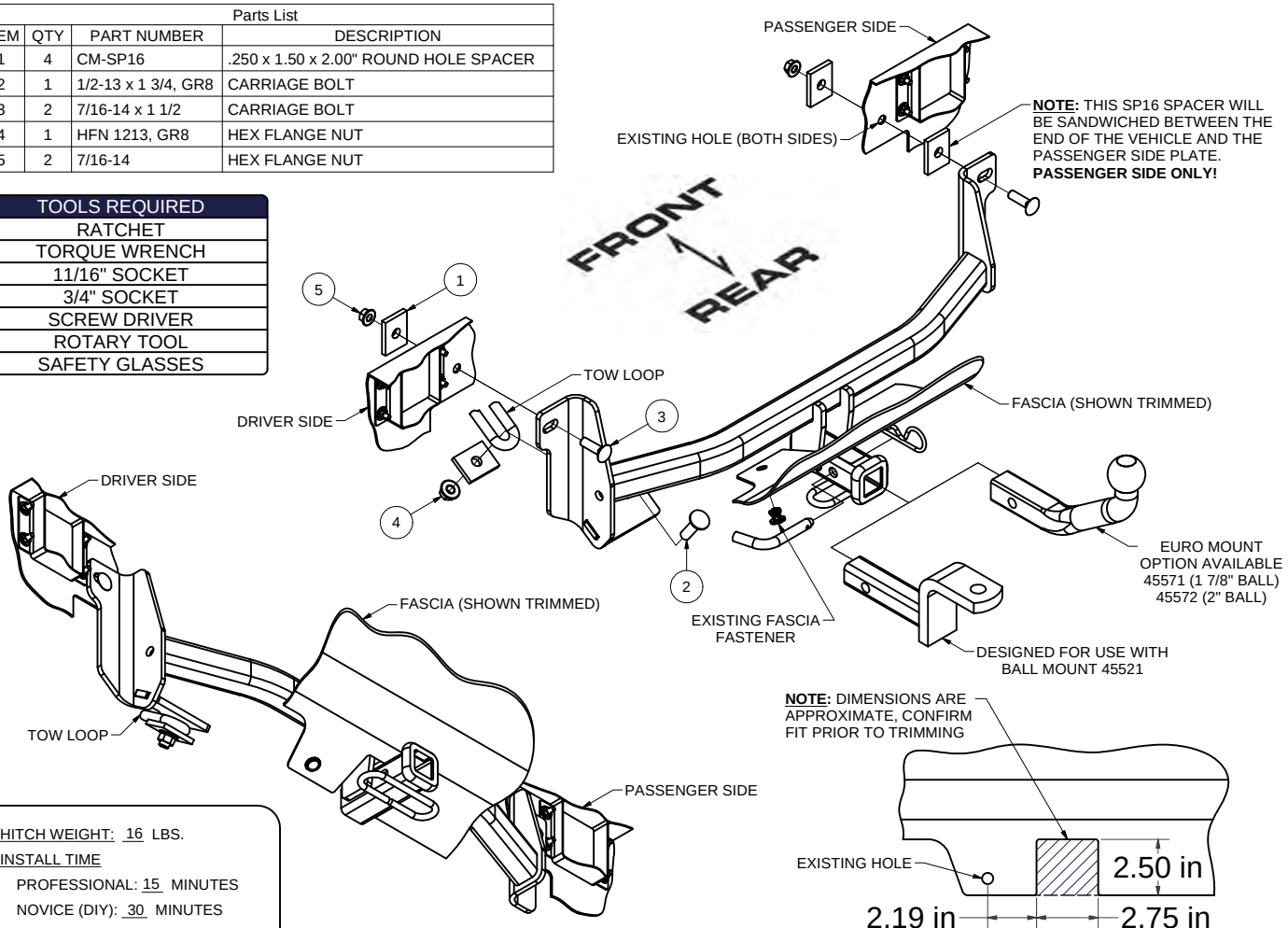

HITCH WEIGHT: 16 LBS.

INSTALL TIME

PROFESSIONAL: 15 MINUTES

NOVICE (DIY): 30 MINUTES

INSTALL NOTES:

- NO DRILLING
- FASCIA TRIMMING REQUIRED

INSTALLED HITCH

FASCIA TRIM DIAGRAM

INSTALLATION STEPS

1. Remove (3) fascia fasteners. Retain fasteners for reinstallation.
2. Mark and trim rear fascia. **Note:** Dimensions are approximate, confirm fit prior to trimming. See Fascia Trim Diagram
3. Gently flex the bottom of the rear fascia back and raise hitch into position. Insert a 7/16"-14 x 1 1/2" carriage bolt through the driver side plate and out the existing hole. Insert a 7/16"-14 x 1 1/2" carriage bolt through the passenger side plate, a SP16 spacer, and out the existing hole. Secure both sides with a SP16 spacer and a 7/16"-14 hex flange nut.
4. Insert a 1/2"-13 x 1 3/4" carriage bolt through the tow loop plate and out the tow loop. Secure with a SP16 spacer and a 1/2"-13 hex flange nut.
5. Torque all 7/16" hardware to 70 ft-lbs.
   Torque all 1/2" hardware to 110 ft-lbs.
6. Reinstall (3) fascia fasteners removed in Step (1).

PERIODICALLY CHECK THIS RECEIVER HITCH TO ENSURE THAT ALL FASTENERS ARE TIGHT AND THAT ALL STRUCTURAL COMPONENTS ARE SOUND.

Curt Manufacturing LLC., warrants this product to be free of defects in material and/or workmanship at the time of retail purchase by the original purchaser. If the product is found to be defective, Curt Manufacturing LLC., may repair or replace the product, at their option, when the product is returned, prepaid, with proof of purchase. Alteration to, misuse of, or improper installation of this product voids the warranty. Curt Manufacturing LLC.'s liability is limited to repair or replacement of products found to be defective, and specifically excludes liability for incidental or consequential loss or damage.