11434 KIA FORTE

10/1/2012

GROSS LOAD CAPACITY WHEN USED AS A WEIGHT CARRYING HITCH: 2,000 LBS. TRAILER WEIGHT & 200 LBS. TONGUE WEIGHT.

*****DO NOT EXCEED VEHICLE MANUFACTURER'S RECOMMENDED TOWING CAPACITY.*****

WARNING: ALL NON-TRAILER LOADS APPLIED TO THIS PRODUCT MUST BE SUPPORTED BY AUXILIARY STABILIZING STRAPS.

**** FAILURE TO PROPERLY SUPPORT NON-TRAILER LOADS WILL VOID PRODUCT WARRANTY****

HAVING INSTALLATION QUESTIONS? CALL TECHNICAL SUPPORT AT 1-800-798-0813

Parts List			
ITEM	QTY	PART NUMBER	DESCRIPTION
1	1	1/2-13 x 1 3/4	CARRIAGE BOLT
2	1	CM-SP4	.250 x 1.50 x 3.00" SQUARE HOLE SPACER
3	1	HFN 1213	HEX FLANGE NUT
4	4	3/8"	CONICAL TOOTHED WASHER
5	4	M10 - 1.25 x 25	HEX BOLT

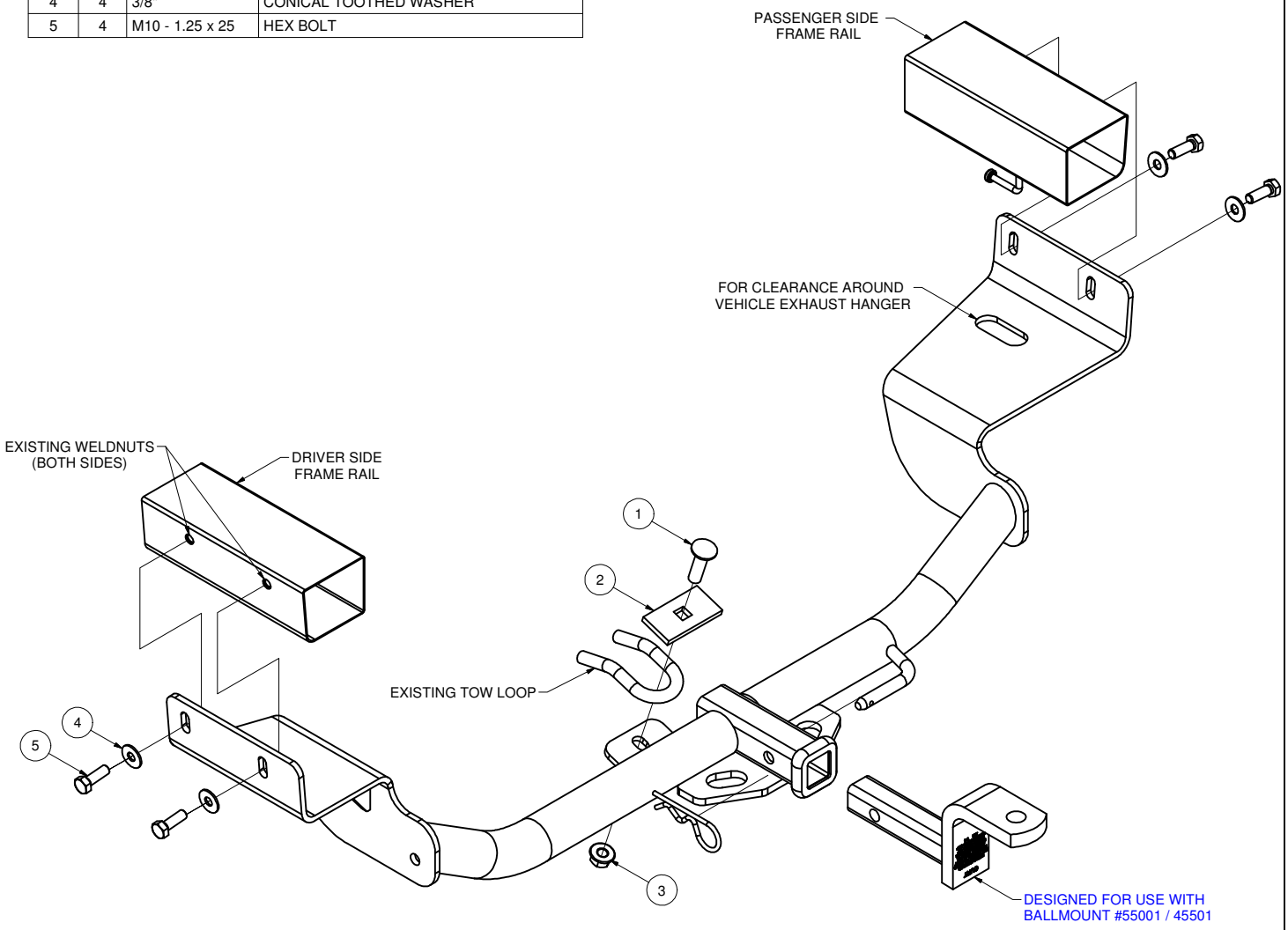

HITCH WEIGHT: 30 LBS.

INSTALL TIME

PROFESSIONAL: 30 MINUTES

NOVICE (DIY): 60 MINUTES

INSTALL NOTES:

- NO DRILLING REQUIRED
- LOWER EXHAUST



PERIODICALLY CHECK THIS RECEIVER HITCH TO ENSURE THAT ALL FASTENERS ARE TIGHT AND THAT ALL STRUCTURAL COMPONENTS ARE SOUND.

Curt Manufacturing Inc., warrants this product to be free of defects in material and/or workmanship at the time of retail purchase by the original purchaser. If the product is found to be defective, Curt Manufacturing Inc., may repair or replace the product, at their option, when the product is returned, prepaid, with proof of purchase. Alteration to, misuse of, or improper installation of this product voids the warranty. Curt Manufacturing Inc.'s liability is limited to repair or replacement of products found to be defective, and specifically excludes liability for incidental or consequential loss or damage.

GROSS LOAD CAPACITY WHEN USED AS A WEIGHT CARRYING HITCH: 2,000 LBS. TRAILER WEIGHT & 200 LBS. TONGUE WEIGHT.

*****DO NOT EXCEED VEHICLE MANUFACTURER'S RECOMMENDED TOWING CAPACITY.*****

WARNING: ALL NON-TRAILER LOADS APPLIED TO THIS PRODUCT MUST BE SUPPORTED BY AUXILIARY STABILIZING STRAPS.

**** FAILURE TO PROPERLY SUPPORT NON-TRAILER LOADS WILL VOID PRODUCT WARRANTY****

HAVING INSTALLATION QUESTIONS? CALL TECHNICAL SUPPORT AT 1-800-798-0813

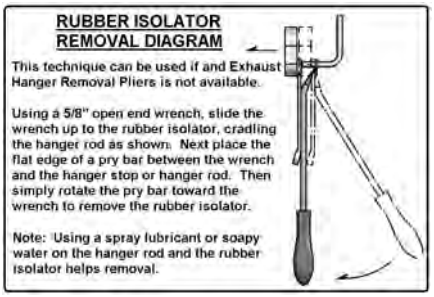

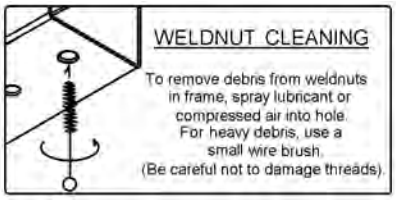

TOOLS REQUIRED
SOCKET WRENCH
TORQUE WRENCH
3/4 in. SOCKET
17mm SOCKET

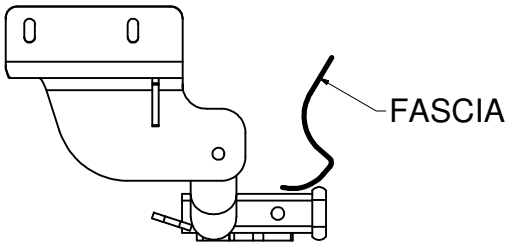

INSTALLED HITCH POSITION

INSTALLATION STEPS

1. Lower exhaust for ease of installation by removing two (2) rubber isolators from exhaust. (See RUBBER ISOLATOR REMOVAL DIAGRAM.)
   Note: For rear isolator, remove isolator from single exhaust hanger attached to vehicle.

2. Install 1/2" carriage bolt and CM-SP4 spacer through top of existing vehicle tow loop, as shown.

3. Raise hitch into position over exhaust.

4. Loosely install 1/2" hex flange nut onto carriage bolt from Step 2.

5. Loosely secure hitch with M10-1.25 hex bolts and 3/8" conical toothed washers through existing weldnuts in outside of frame rails.

6. Torque M10-1.25 hardware to 48 lb-ft and 1/2" hardware to 110 lb-ft.

7. Raise exhaust back into position.

PERIODICALLY CHECK THIS RECEIVER HITCH TO ENSURE THAT ALL FASTENERS ARE TIGHT AND THAT ALL STRUCTURAL COMPONENTS ARE SOUND.

Curt Manufacturing Inc., warrants this product to be free of defects in material and/or workmanship at the time of retail purchase by the original purchaser. If the product is found to be defective, Curt Manufacturing Inc., may repair or replace the product, at their option, when the product is returned, prepaid, with proof of purchase. Alteration to, misuse of, or improper installation of this product voids the warranty. Curt Manufacturing Inc.'s liability is limited to repair or replacement of products found to be defective, and specifically excludes liability for incidental or consequential loss or damage.