11498 BMW 5-SERIES

4/05/2013

GROSS LOAD CAPACITY WHEN USED AS A WEIGHT CARRYING HITCH: 2,000 LBS. TRAILER WEIGHT & 200 LBS. TONGUE WEIGHT.

DO NOT EXCEED VEHICLE MANUFACTURER'S RECOMMENDED TOWING CAPACITY.

WARNING: ALL NON-TRAILER LOADS APPLIED TO THIS PRODUCT MUST BE SUPPORTED BY AUXILIARY STABILIZING STRAPS.

** FAILURE TO PROPERLY SUPPORT NON-TRAILER LOADS WILL VOID PRODUCT WARRANTY**

HAVING INSTALLATION QUESTIONS? CALL TECHNICAL SUPPORT AT 1-800-798-0813

Parts List			
ITEM	QTY	PART NUMBER	DESCRIPTION
1	4	CM-SP4	.250 x 1.50 x 3.00" SQUARE HOLE SPACER
2	4	HFN 1213	HEX FLANGE NUT
3	4	1/2-13 x 1 3/4	CARRIAGE BOLT

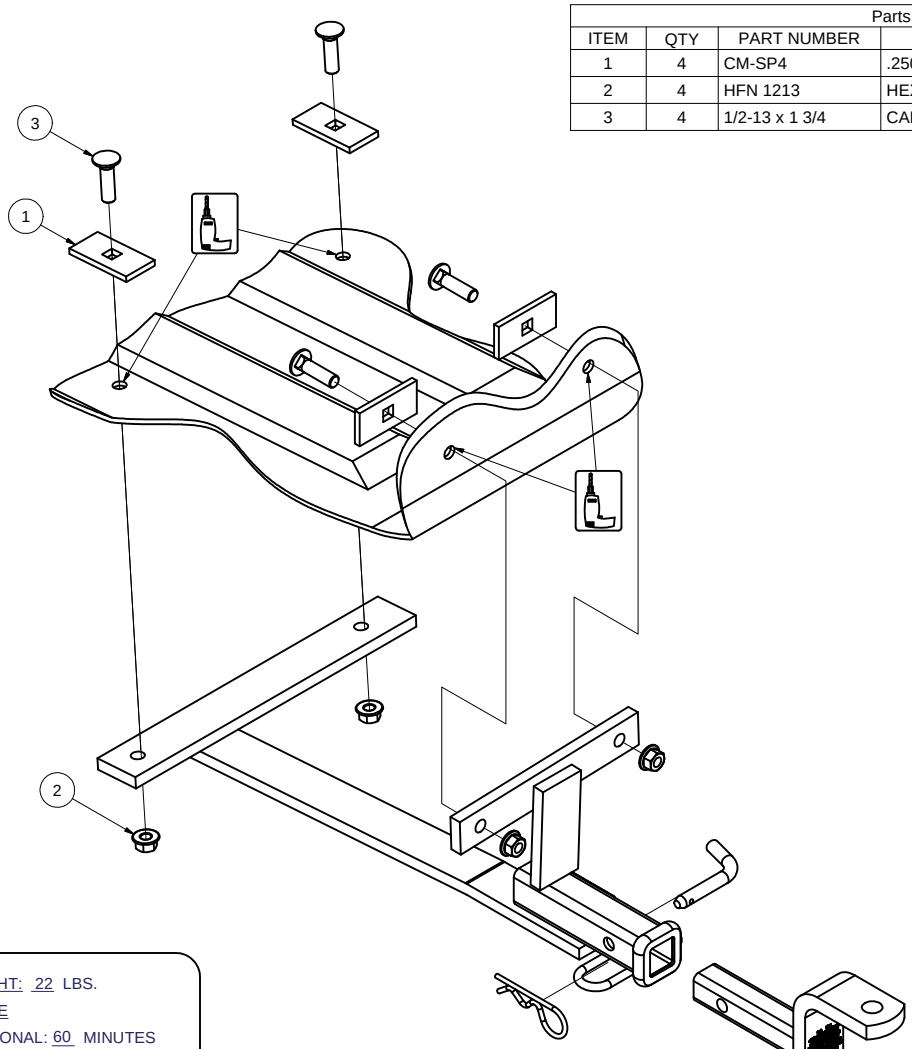



HITCH WEIGHT: 22 LBS.

INSTALL TIME

PROFESSIONAL: 60 MINUTES

NOVICE (DIY): 120 MINUTES

INSTALL NOTES:

- DRILLING REQUIRED

- REMOVE SPARE TIRE

DESIGNED FOR USE WITH
BALLMOUNT #55001 / 45501

INSTALLATION STEPS

NOTE: If present, remove underbody panel, trim accordingly, and re-install.
Temporarily remove all items from trunk prior to installation

1. Raise hitch into position. Be sure to center and level hitch on vehicle.
2. Mark hitch and drill all 4 holes with 17/32" drill bit. (Angle drill will ease installation.)
3. Place carriage bolts and square hole spacers into drilled holes, install hex nuts as shown.
4. Use silicone caulk to seal holes from exhaust fumes and water.
5. Torque all 1/2" fasteners to 110 lb-ft.

PERIODICALLY CHECK THIS RECEIVER HITCH TO ENSURE THAT ALL FASTENERS ARE TIGHT AND THAT ALL STRUCTURAL COMPONENTS ARE SOUND.

Curt Manufacturing Inc., warrants this product to be free of defects in material and/or workmanship at the time of retail purchase by the original purchaser. If the product is found to be defective, Curt Manufacturing Inc., may repair or replace the product, at their option, when the product is returned, prepaid, with proof of purchase. Alteration to, misuse of, or improper installation of this product voids the warranty. Curt Manufacturing Inc.'s liability is limited to repair or replacement of products found to be defective, and specifically excludes liability for incidental or consequential loss or damage.