11499 INFINITI G25/G35/G37 & G25x/G35x/G37x SEDAN

10/5/2012

GROSS LOAD CAPACITY WHEN USED AS A WEIGHT CARRYING HITCH: 2,000 LBS. TRAILER WEIGHT & 200 LBS. TONGUE WEIGHT.

*****DO NOT EXCEED VEHICLE MANUFACTURER'S RECOMMENDED TOWING CAPACITY.*****

WARNING: ALL NON-TRAILER LOADS APPLIED TO THIS PRODUCT MUST BE SUPPORTED BY AUXILIARY STABILIZING STRAPS.

**** FAILURE TO PROPERLY SUPPORT NON-TRAILER LOADS WILL VOID PRODUCT WARRANTY****

HAVING INSTALLATION QUESTIONS? CALL TECHNICAL SUPPORT AT 1-800-798-0813

Parts List			
ITEM	QTY	PART NUMBER	DESCRIPTION
1	1	1/2-13 x 1 3/4	CARRIAGE BOLT
2	1	HFN 1213	HEX FLANGE NUT
3	1	CM-SP53	.250 x 1.50 x 3.00" SQUARE HOLE SPACER
4	4	5/16"	WASHER

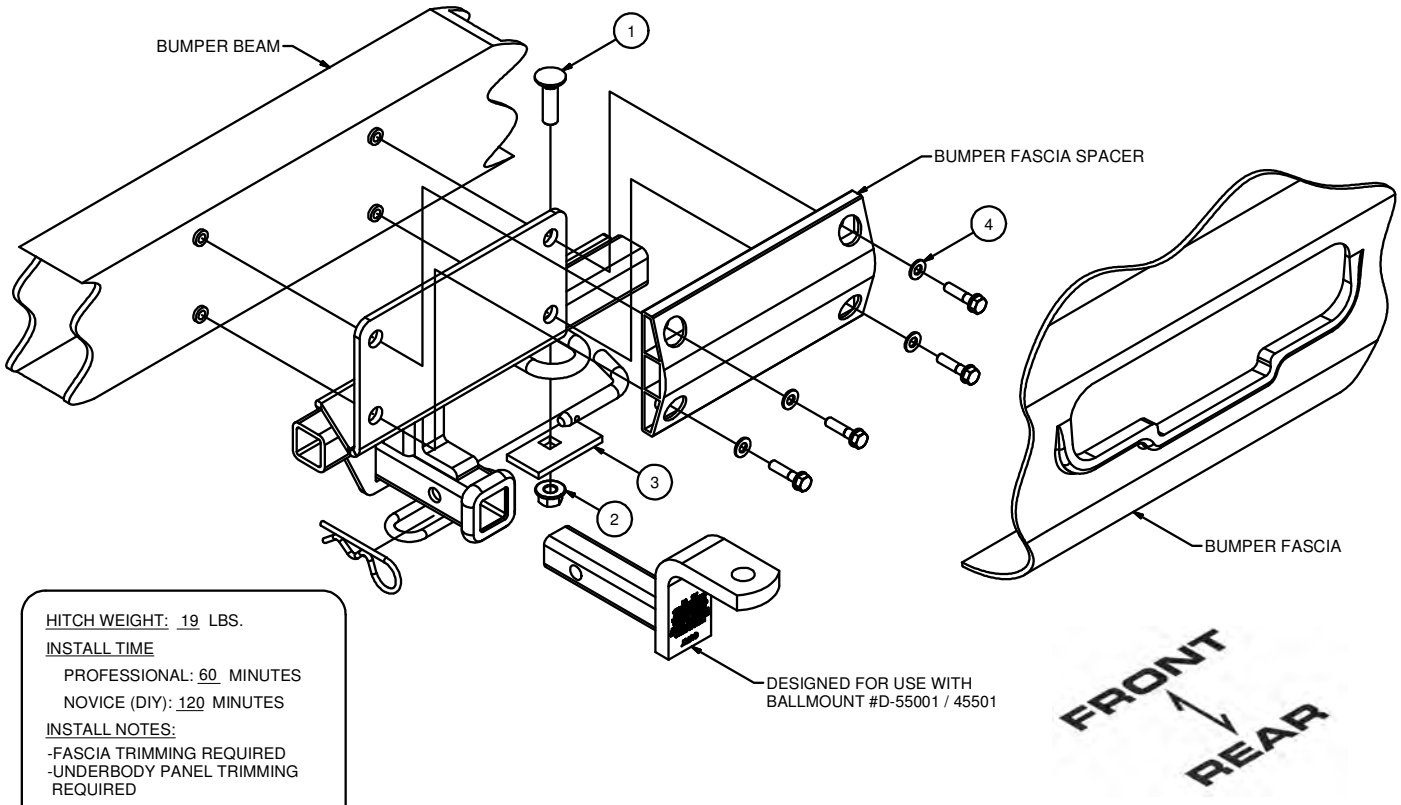

HITCH WEIGHT: 19 LBS.

INSTALL TIME

PROFESSIONAL: 60 MINUTES

NOVICE (DIY): 120 MINUTES

INSTALL NOTES:

-FASCIA TRIMMING REQUIRED
-UNDERBODY PANEL TRIMMING REQUIRED

INSTALLATION STEPS

1. Remove the (2) lower fascia tabs, license plate, and the black underbody panel. (Save for reuse.)
2. Layout a 1 3/4" wide by 2" deep rectangle in the center of the lower bumper fascia. Remove the material in the marked rectangle by cutting with a rotary tool (or equivalent).
3. Remove the aluminum bumper fascia spacer on the backside of the bumper by removing the (4) existing M8 bolts. (Note: On some vehicles it may be necessary to fracture a tack weld to allow the removal of the aluminum spacer. A pry bar or screwdriver may be used for this purpose.)
4. Raise the hitch and bumper fascia spacer into position, and attach with existing M8 bolts and 5/16" supplied washers as shown in the above diagram making sure hitch sits flat against bumper beam.
5. Attach the hitch to the tow loop using the supplied 1/2-13 x 1 3/4" carriage bolt with CM-SP53 and 1/2" flange nut as shown above.
6. Torque all M8 hardware to 23 ft-lbs. and all 1/2" hardware to 110 ft-lbs.
7. Raise black underbody cover into position, mark width needed to cut around hitch. Lower and make cut-out 2 3/4" deep.
8. Reinstall the black underbody cover, the (2) lower fascia tabs, and the license plate.

PERIODICALLY CHECK THIS RECEIVER HITCH TO ENSURE THAT ALL FASTENERS ARE TIGHT AND THAT ALL STRUCTURAL COMPONENTS ARE SOUND.

Curt Manufacturing Inc., warrants this product to be free of defects in material and/or workmanship at the time of retail purchase by the original purchaser. If the product is found to be defective, Curt Manufacturing Inc., may repair or replace the product, at their option, when the product is returned, prepaid, with proof of purchase. Alteration to, misuse of, or improper installation of this product voids the warranty. Curt Manufacturing Inc.'s liability is limited to repair or replacement of products found to be defective, and specifically excludes liability for incidental or consequential loss or damage.