11522 INSTALLATION INSTRUCTIONS

Safety glasses should be worn at all times while installing this product.

YEARS: 2017-PRESENT | MAKE: MINI COOPER | MODEL: COUNTRYMAN | STYLE: WAGON

WARNING: NEVER EXCEED YOUR VEHICLE MANUFACTURER'S RECOMMENDED TOWING CAPACITY
For more information log onto www.curtmfg.com & for helpful towing tips log onto www.hitchinfo.com

WEIGHT CARRYING:

TRAILER WEIGHT: 2,000 LBS.
TONGUE WEIGHT: 200 LBS.

WARNING:
WE RECOMMEND THE USE OF 18050 STABILIZING STRAPS FOR ALL NON-TRAILER (WHEEL-LESS) LOADS. PLEASE SEE THE CURT CATALOG OR VISIT US ONLINE AT WWW.CURTMFG.COM FOR FURTHER INFORMATION.

PRO INSTALL TIME: 90 MIN.
NOVICE INSTALL TIME: 180 MIN.

IF YOU ARE HESITANT TO UNDERTAKE THIS TASK ON YOUR OWN, CONTACT AN AUTHORIZED CURT INSTALLER FOR ADDITIONAL ASSISTANCE.

INSTALLATION REQUIRES:


RATCHET


TORQUE WRENCH


8" SOCKET EXTENSION


8mm
10mm
18mm
SOCKETS


PRY BAR


T-25 TORXBIT SOCKET


PLIERS


PLASTIC RIVET GUN


CENTER PUNCH


SAFETY GLASSES

INSTALLATION TIPS:

1. BEFORE YOU BEGIN INSTALLATION, READ ALL INSTRUCTIONS THOROUGHLY.
2. TO EASE INSTALLATION, 2 PEOPLE MAY BE REQUIRED.
3. USING PROPER TOOLS WILL GREATLY IMPROVE THE QUALITY OF THE INSTALL AND REDUCE THE TIME REQUIRED.
4. NEED HELP OR HAVE SOME QUESTIONS? CALL TECHNICAL SUPPORT AT 800.798.0813

LEVEL OF DIFFICULTY: CHALLENGING

EASY | MODERATE | CHALLENGING


NO DRILLING REQUIRED

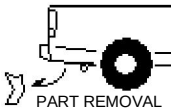
PART REMOVAL

TEMPORARILY REMOVE BUMPER AND REAR FASCIA

VEHICLE PHOTO:



REPRESENTATIVE PHOTO

HITCH ILLUSTRATION:

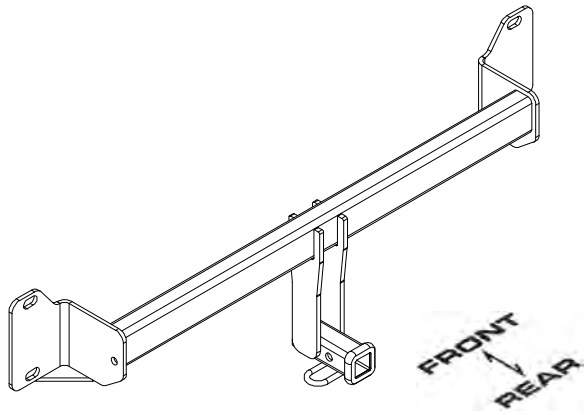

MAKE SURE YOUR HITCH MATCHES

SCAN FOR MORE INFO

PERIODICALLY CHECK THIS RECEIVER HITCH TO ENSURE ALL FASTENERS ARE TIGHT AND ALL STRUCTURAL COMPONENTS ARE SOUND

CURT Manufacturing LLC. warrants this product to be free of defects in material and/or workmanship at the time of retail purchase by the original purchaser. If the product is found to be defective, CURT Manufacturing LLC. may repair or replace the product at their option, when the product is returned, prepaid, with proof of purchase. Alteration to, misuse of, or improper installation of this product voids the warranty. CURT Manufacturing LLC.'s liability is limited to repair or replacement of products found to be defective, and specifically excludes liability for incidental or consequential loss or damage.

For more information log onto www.curtmfg.com , & for helpful towing tips log onto www.hitchinfo.com

This product complies with safety specifications and requirements for connecting devices and towing systems of the state of New York, V.E.S.C.Regulation V-5 and SAE J684.

9/18/2017

INSTALLATION WALKTHROUGH:

Parts List			
ITEM	QTY	PART NUMBER	DESCRIPTION
1	16	M6 RIVET	NYLON RIVET

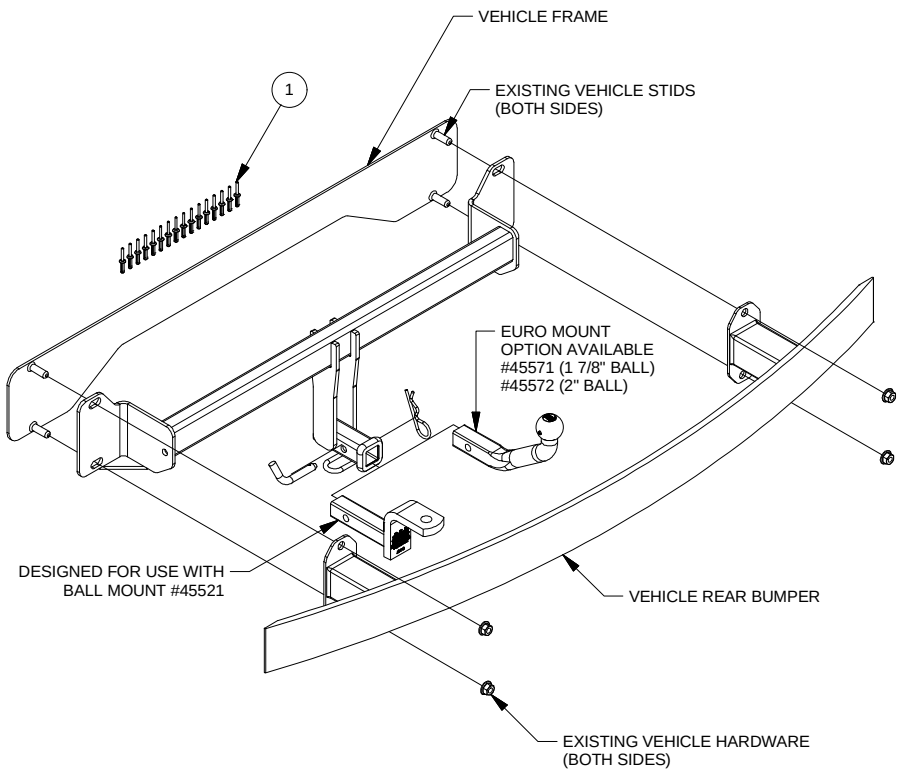

1. Remove (8) fasteners from bottom of rear fascia using 8mm socket.





2. Remove (6) rivets along wheel well trim above each rear tire using a small punch and pry tool. **NOTE:** Replacement rivets are included.



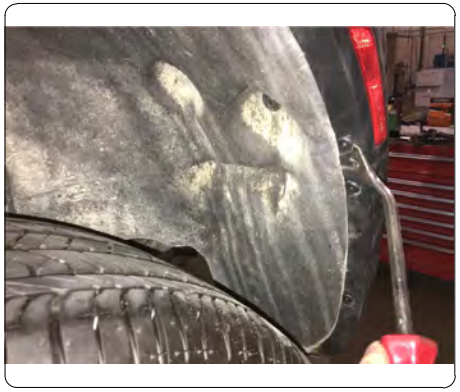

For more information log onto www.curtmfg.com, & for helpful towing tips log onto www.hitchinfo.com

INSTALLATION WALKTHROUGH:

3. Remove (2) fasteners from each side of rear fascia behind wheel well using T25 socket.





4. Open rear hatch to expose and remove plastic cover located inbore of each tail light, remove (1) fastener on each side using needle nose pliers.





5. Remove (2) bolts from each tail light using 10mm socket. Carefully remove tail light from vehicle and unclip electrical harness.

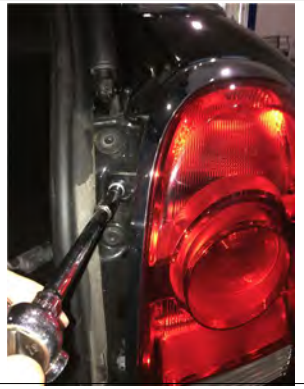



6. Remove rear fascia by locating and removing fastener behind wheel well trim using T25 socket and unclip rear fascia attachments. **NOTE:** Unplug electrical sensors if present.





INSTALLATION WALKTHROUGH:

7. Remove rear bumper beam from vehicle by removing (2) nuts on each side using 18mm socket.
   NOTE: If hands free lift gate is present remove (2) fasteners and unclip from vehicle.




8. Raise hitch into position using studs to align. Reinstall rear bumper beam over hitch and secure using existing vehicle hardware.




9. Torque all M12 hardware to 86 ft-lbs.




10. Reinstall vehicle components removed using steps 1-7 in reverse order.




For more information log onto www.curtmfg.com, & for helpful towing tips log onto www.hitchinfo.com

TOWING SAFETY INFORMATION

Gross Trailer Weight / GTW

The Gross Trailer Weight is the weight of the trailer & cargo.
Measure this by putting the fully loaded trailer on a vehicle scale.



Tongue Weight / TW

The downward force that is exerted on the hitch ball by the coupler. The tongue weight will vary depending on where the load is positioned in relationship to the trailer axle(s). To measure the tongue weight, use either a commercial scale or a bathroom scale with the coupler at towing height. When using a bathroom scale with heavier tongue weights, use the method shown and multiply the scale reading by 3.

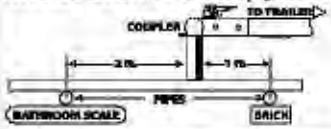

Weight Carrying / WC

The total weight of both the trailer and the cargo inside.
Never exceed the weight capacity of your trailer hitch.

Weight Distribution / WD

Used to balance the weight of the cargo between the front and rear wheels throughout the trailer, allowing for better steering, braking, and level riding.



Sway Control

A device used to reduce the lateral movements of the trailer that are caused by the wind. This works in conjunction with a weight distribution hitch. Do not use this on a class 1 or 2 hitch, or with surge brakes.

How Much Can You Safely Tow?

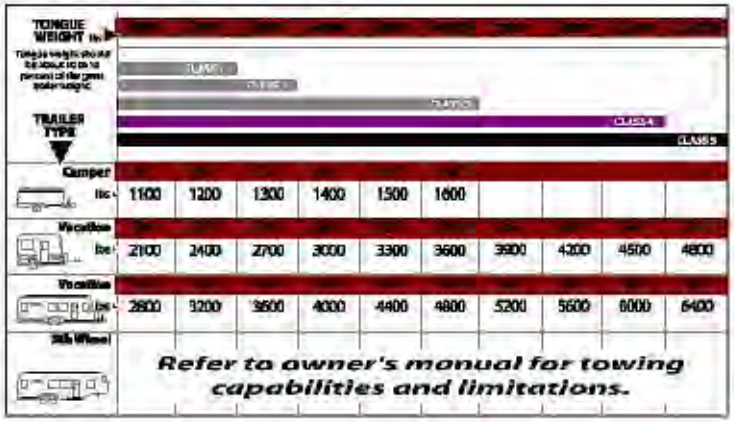

Ball Mount

The ball mount is placed inside the opening of the receiver hitch which is mounted to the vehicle. Make sure a hitch pin and clip is properly securing the ball mount to the receiver hitch before you begin towing.

- A: Rise. B: Drop. C: Hole Size. D: Length.

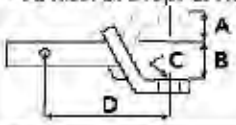

Trailer Ball

The connection from the hitch to the trailer. There are many factors that determine the correct hitch ball:

- Number one is the hitch ball's gross trailer weight rating.
- The mounting platform must be at least 3/8" thick.
- The hole diameter must not be more than 1/16" larger than the threaded shank.
- Every time you tow, check the nut and lock washer to make sure they are fastened securely.
- A: Ball Dia. B: Shank Length. C: Shank Dia. D: Shank Rise.

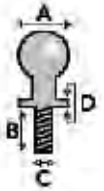

Coupler

The component that is placed over the trailer ball to connect the vehicle to the trailer. Be sure that the coupler size matches the size of the hitch ball and that the coupler handle is securely fastened. To determine what size hitch ball you need for your application you will need to know the size of coupler that is on the trailer. Be sure your coupler is properly adjusted to the ball you are using.
NOTE: For added security the use of safety devices such as Coupler Safety Pins and Locks is strongly recommended.

Safety Chains

Safety chains are a requirement and should be crossed under the tongue of the trailer so that the tongue will not drop to the road if it becomes separated from the hitch. Always leave enough slack so you can turn. Never allow the safety chains to drag on the ground and never attach the chains to the bumper.
Trailer Classification: Safety Chain Breaking Force - Minimum
Class 1: 2,000 lbs. (8.9 kN)
Class 2: 3,500 lbs. (15.6 kN)
Class 3: 5,000 lbs. (22.2 kN)
The strength rating of each length of safety chain or its equivalent and its attachments shall be equal to or exceed in minimum breaking force the GVWR (Gross Vehicle Weight Rating) of the trailer.

Electrical

Trailer lights, Electric Brakes, Break-away systems - Every time you tow, be sure to check that all components are working properly.
Wiring identification by color:

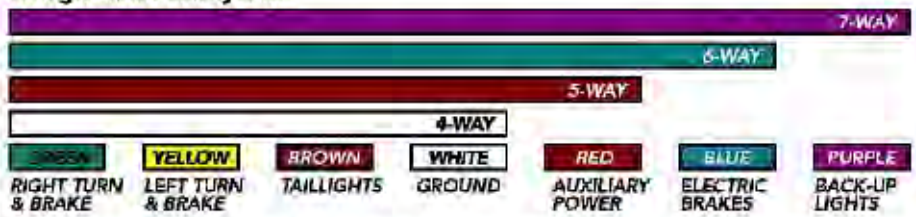

CURT DISCLAIMER: WIRING COLOR SHOWN WORK IN CONJUNCTION WITH CURT MANUFACTURING PRODUCTS.

11522 MINI COOPER COUNTRYMAN

9/19/2017

GROSS LOAD CAPACITY WHEN USED AS A WEIGHT CARRYING HITCH: 2,000 LBS. TRAILER WEIGHT & 200 LBS. TONGUE WEIGHT.

WARNING: ALL NON-TRAILER (WHEEL-LESS) LOADS APPLIED TO THIS PRODUCT MUST BE SUPPORTED BY 18050 STABILIZING STRAPS.

WARNING: ** FAILURE TO PROPERLY SUPPORT NON-TRAILER LOADS WILL VOID PRODUCT WARRANTY **

WARNING: *** DO NOT EXCEED VEHICLE MANUFACTURER'S RECOMMENDED TOWING CAPACITY ***

FOR MORE INFORMATION LOG ONTO WWW.CURTMFG.COM
HAVING INSTALLATION QUESTIONS? CALL TECHNICAL SUPPORT AT 1-800-798-0813

Parts List			
ITEM	QTY	PART NUMBER	DESCRIPTION
1	16	M6 RIVET	NYLON RIVET

TOOLS REQUIRED
RATCHET
TORQUE WRENCH
8" SOCKET EXTENSION
8mm/10mm/18mm SOCKETS
T-25 SOCKETS
PLIERS
RIVET GUN
CENTER PUNCH
PRY BAR
SAFETY GLASSES

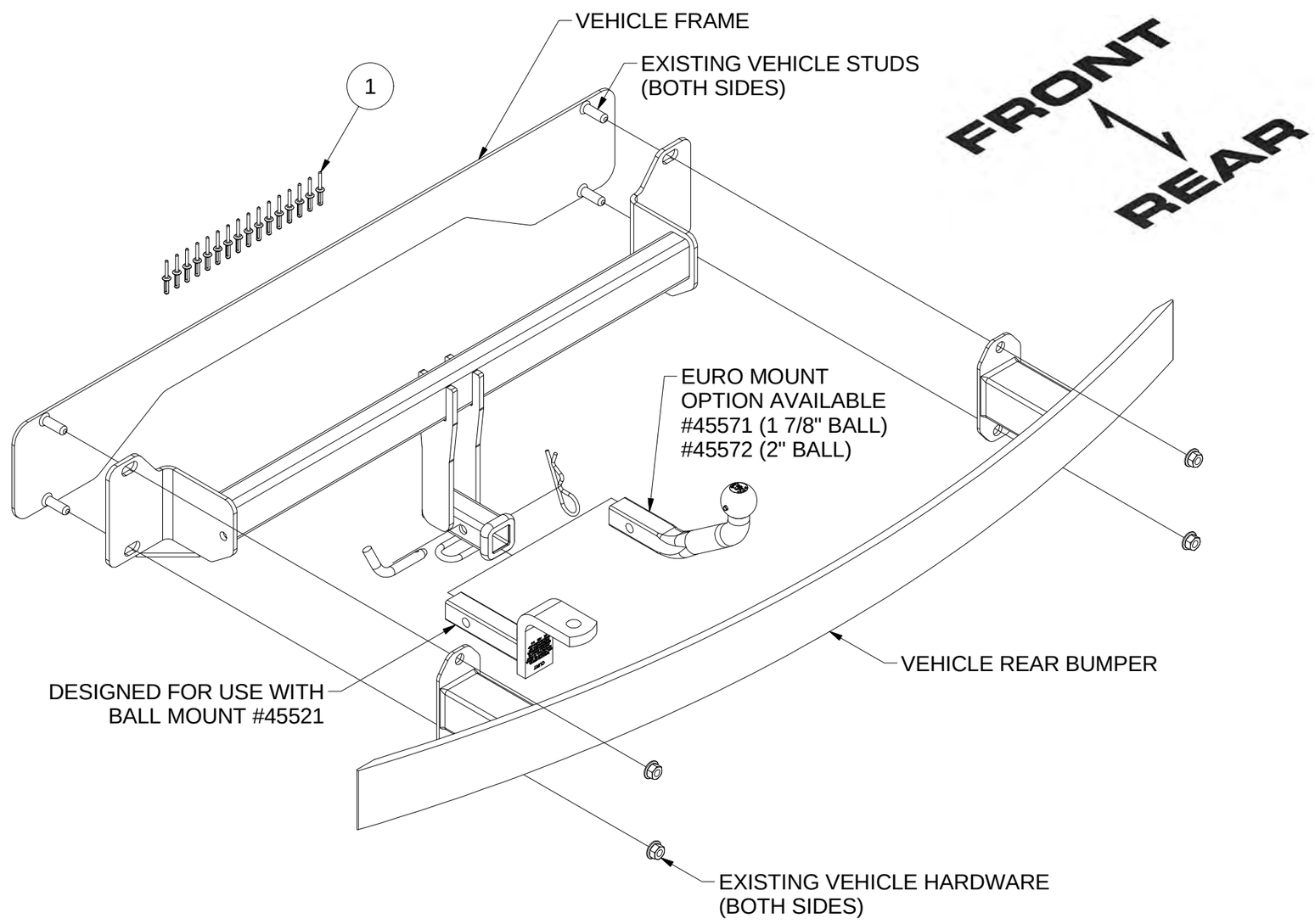

HITCH WEIGHT: 24 LBS.

INSTALL TIME

PROFESSIONAL: 90 MINUTES

NOVICE (DIY): 180 MINUTES

INSTALL NOTES:

-NO DRILLING REQUIRED
-TEMPORARILY REMOVE BUMPER AND REAR FASCIA

INSTALLATION STEPS

1. Remove (8) fasteners from bottom of rear fascia using 8mm socket.

2. Remove (4) rivets along wheel well trim above each rear tire using a small punch and pry tool.
   NOTE: Replacement rivets are included.

3. Remove (2) fasteners from each side or rear fascia behind wheel well using T25 socket.

4. Open rear hatch to expose and remove plastic cover inbore of each tail light, remove (1) fastener using needle nose pliers.

5. Remove (2) bolts from each tail light using 10mm socket. Carefully remove tail light from vehicle and unclip electrical harness.

6. Remove rear fascia by locating and removing fastener behind wheel well trim using T25 socket and unclip rear fascia attachments.
   NOTE: Unplug electrical sensors if present.

7. Remove rear bumper beam from vehicle by removing (2) nuts on each side using 18mm socket.
   NOTE: If hands free lift gate is present remove (2) fasteners using 8mm socket and unclip from vehicle.

8. Raise hitch into position using studs to align. Reinstall rear bumper over hitch and secure using existing vehicle hardware.

9. Torque all M12 hardware to 86 ft-lbs.

10. Reinstall vehicle components using steps 1-7 in reverse order.

PERIODICALLY CHECK THIS RECEIVER HITCH TO ENSURE THAT ALL FASTENERS ARE TIGHT AND THAT ALL STRUCTURAL COMPONENTS ARE SOUND.

Scan for more information

CURT Manufacturing LLC., warrants this product to be free of defects in material and/or workmanship at the time of retail purchase by the original purchaser. If the product is found to be defective, CURT Manufacturing LLC., may repair or replace the product, at their option, when the product is returned, prepaid, with proof of purchase. Alteration to, misuse of, or improper installation of this product voids the warranty. CURT Manufacturing LLC.'s liability is limited to repair or replacement of products found to be defective, and specifically excludes liability for incidental or consequential loss or damage.

This product complies with safety specifications and requirements for connecting devices and towing systems of the state of New York, V.E.S.C.Regulation V-5 and SAE J684.