11773 01-03 ACURA MDX, HONDA PILOT

11/19/2012

GROSS LOAD CAPACITY WHEN USED AS A WEIGHT CARRYING HITCH: 2,000 LBS. TRAILER WEIGHT & 200 LBS. TONGUE WEIGHT.
*****DO NOT EXCEED VEHICLE MANUFACTURER'S RECOMMENDED TOWING CAPACITY.*****
WARNING: ALL NON-TRAILER LOADS APPLIED TO THIS PRODUCT MUST BE SUPPORTED BY AUXILIARY STABILIZING STRAPS.
**** FAILURE TO PROPERLY SUPPORT NON-TRAILER LOADS WILL VOID PRODUCT WARRANTY****
HAVING INSTALLATION QUESTIONS? CALL TECHNICAL SUPPORT AT 1-800-798-0813

Parts List			
ITEM	QTY	PART NUMBER	DESCRIPTION
1	2	M10 - 1.25 x 30	HEX BOLT
2	2	7/16 LOCK WASHER	HELICAL LOCK WASHER
3	2	3/8-16 X 1 1/2	HEX BOLT
4	2	3/8"	LOCK WASHER
5	2	3_8-16 TAB NUT	HANDLE NUT

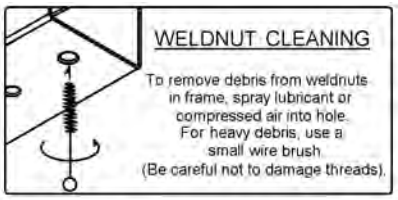

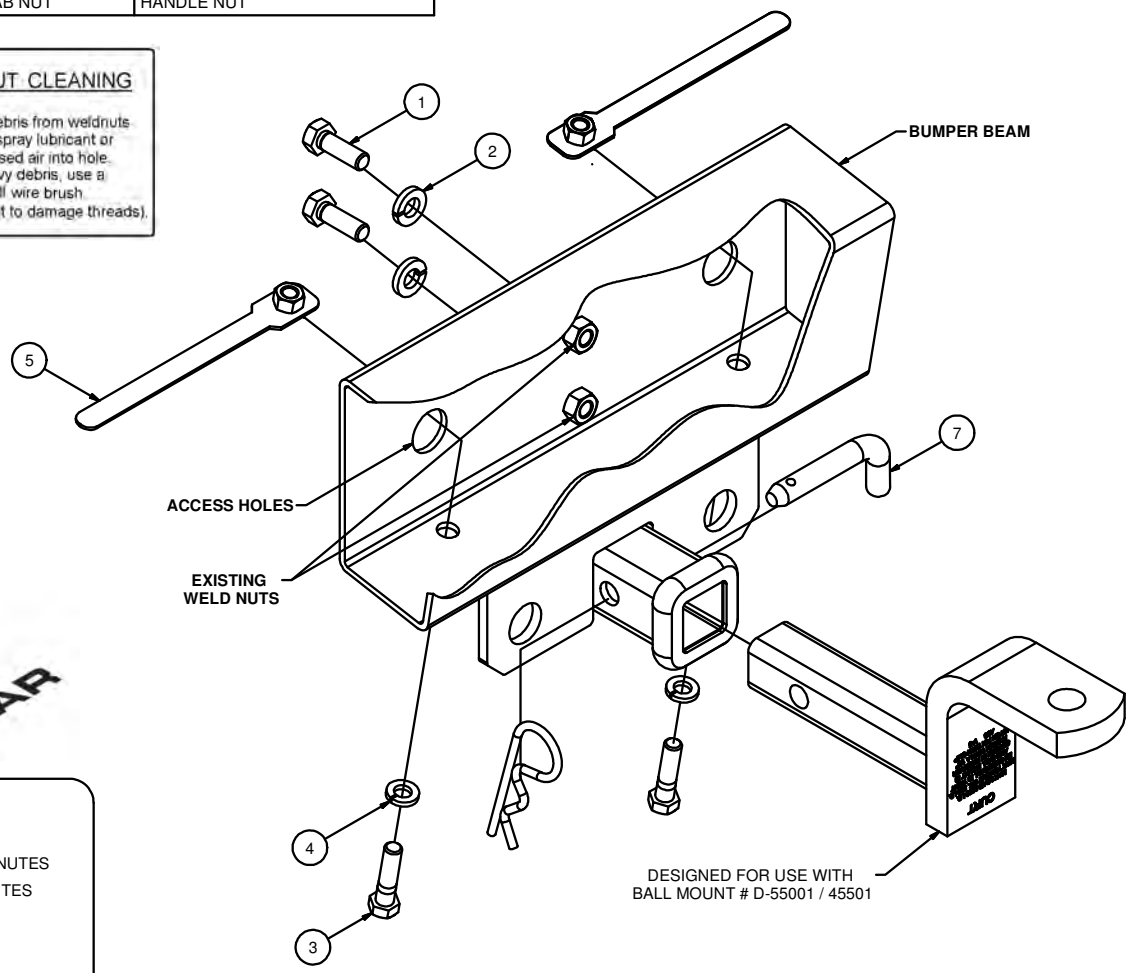



HITCH WEIGHT: 10 LBS.
INSTALL TIME
PROFESSIONAL: 30 MINUTES
NOVICE (DIY): 60 MINUTES
INSTALL NOTES:
-NO DRILLING REQUIRED

INSTALLATION STEPS

1. This hitch mounts to the rear bumper beam reinforcement at existing holes. Special washer faced handle nuts are placed inside the beam through existing access holes.
2. Locate (2) threaded (10mm) holes in the forward face of beam making sure the threads are clean. Loosely install the hitch at threaded holes using fasteners as shown.
3. Install fasteners through the bottom of the bumper beam with lock washers up though the hitch bracket and existing holes in the bottom of the beam. If necessary, these holes may be enlarged to make fit up easier. Place handle nuts though access holes as shown to engage screws.
4. Torque all 3/8" fasteners to 45 lb-ft, and all 10mm fasteners to 49 lb-ft.

PERIODICALLY CHECK THIS RECEIVER HITCH TO ENSURE THAT ALL FASTENERS ARE TIGHT AND THAT ALL STRUCTURAL COMPONENTS ARE SOUND.

Curt Manufacturing Inc., warrants this product to be free of defects in material and/or workmanship at the time of retail purchase by the original purchaser. If the product is found to be defective, Curt Manufacturing Inc., may repair or replace the product, at their option, when the product is returned, prepaid, with proof of purchase. Alteration to, misuse of, or improper installation of this product voids the warranty. Curt Manufacturing Inc.'s liability is limited to repair or replacement of products found to be defective, and specifically excludes liability for incidental or consequential loss or damage.