12011 — 83-04 CHEVROLET / GMC S-10, S-15 & SONOMA PICKUPS (INCLUDING SPORT SIDE) 96-00 ISUZU HOMBRE

10/12/2012

GROSS LOAD CAPACITY WHEN USED AS A WEIGHT CARRYING HITCH: 3500 LBS. TRAILER WEIGHT & 350 LBS. TONGUE WEIGHT.
*****DO NOT EXCEED VEHICLE MANUFACTURER'S RECOMMENDED TOWING CAPACITY.*****

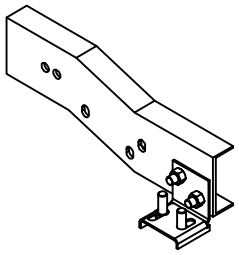

1994-1997
BUMPER BRACKET
CONFIGURATION

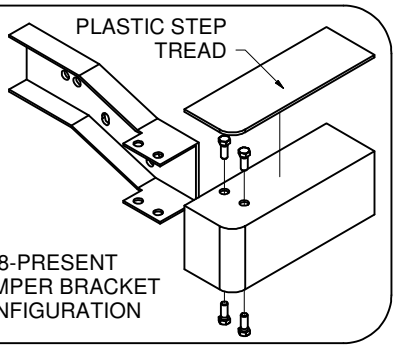

1998-PRESENT
BUMPER BRACKET
CONFIGURATION

Parts List			
ITEM	QTY	PART NUMBER	DESCRIPTION
1	6	M12-1.75 x 40mm	HEX BOLT
2	12	FW12	FW, 12, ZP
3	6	1/2"	LOCK WASHER
4	6	M12 - 1.75	HEX NUT

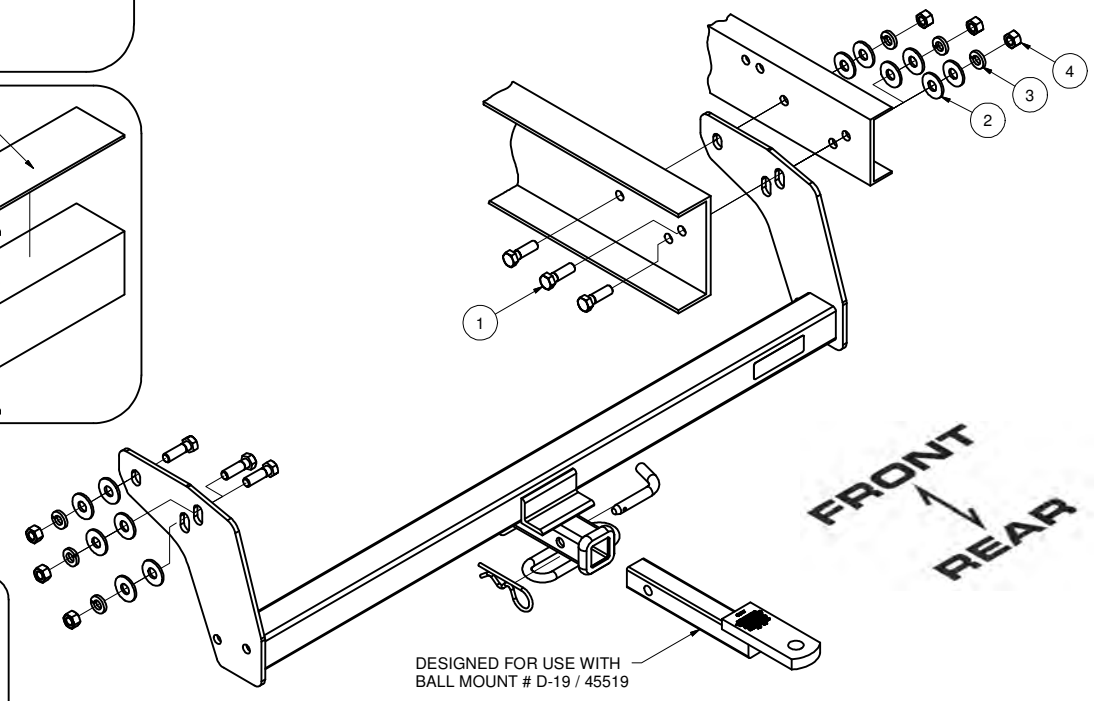

HITCH WEIGHT: 38 LBS.
INSTALL TIME: 45 MINUTES
INSTALL NOTES:
- NO DRILLING REQUIRED

INSTALLATION STEPS

SPORTSIDE BED MODELS

Note: Some spare tires may need to be lowered and repositioned for hitch installation

1) Remove bumper bracket bolts and return to vehicle owner.
2) Position hitch on frame and install fasteners as shown above.

STEP BUMPER MODELS

1) Remove bumper, leaving brackets attached to frame. Disconnect bumper wiring and remove bumper.
   Note: Pre-1994 models, bumper is attached to each bracket by two horizontal bolts.
   1994-1997 models, bumper is attached to each bracket by two vertical bolts.
   1998-present, remove plastic tread from top of bumper. The bumper is attached with four vertical bolts.
2) Remove bumper brackets from frame. Remove bumper wiring guides from bumper brackets.
3) If installing hitch on an early model vehicle using a cradle storage system for the spare tire, mark the spare tire carrier 1/8" inboard of outer frame edge. Lower spare tire and cut off carrier along previously marked line.
4) Position receiver on frame and loosely install bumper brackets using (3) M12 bolts and fasteners per side. Receiver brackets are positioned between bumper brackets and frame.
5) Pre-1994 models, reinstall bumper on bumper brackets with original bolts, using (3) 1/2" washers at each bolt location as spacers between brackets and bumper. (see above)
6) Raise spare tire back into position and secure. Reconnect bumper wiring.
7) Torque all fasteners to 110 lb.-ft

PERIODICALLY CHECK THIS RECEIVER HITCH TO ENSURE THAT ALL FASTENERS ARE TIGHT AND THAT ALL STRUCTURAL COMPONENTS ARE SOUND.

Curt Manufacturing Inc., warrants this product to be free of defects in material and/or workmanship at the time of retail purchase by the original purchaser. If the product is found to be defective, Curt Manufacturing Inc., may repair or replace the product, at their option, when the product is returned, prepaid, with proof of purchase. Alteration to, misuse of, or improper installation of this product voids the warranty. Curt Manufacturing Inc.'s liability is limited to repair or replacement of products found to be defective, and specifically excludes liability for incidental or consequential loss or damage.