12040

1999-2005 PONTIAC GRAND AM - ALL MODELS
1999-2004 OLDSMOBILE ALERO

7/18/2012

GROSS LOAD CAPACITY WHEN USED AS A WEIGHT CARRYING HITCH: 3,500 LBS. TRAILER WEIGHT & 350 LBS. TONGUE WEIGHT.

*****DO NOT EXCEED VEHICLE MANUFACTURER'S RECOMMENDED TOWING CAPACITY.*****

WARNING: ALL NON-TRAILER LOADS APPLIED TO THIS PRODUCT MUST BE SUPPORTED BY AUXILIARY STABILIZING STRAPS.

**** FAILURE TO PROPERLY SUPPORT NON-TRAILER LOADS WILL VOID PRODUCT WARRANTY****

HAVING INSTALLATION QUESTIONS? CALL TECHNICAL SUPPORT AT 1-800-798-0813

Parts List			
ITEM	QTY	PART NUMBER	DESCRIPTION
1	1	1/2"	FISHWIRE TOOL
2	4	HFN 1213	HEX FLANGE NUT
3	4	1/2 - 13 x 2"	CARRIAGE BOLT
4	4	CM-SP19	.250 x 1.25 x 3.00" SQUARE HOLE SPACER
5	2	CM-SP31	.250 x 1.75 x 2.00" U-SHAPE SPACER

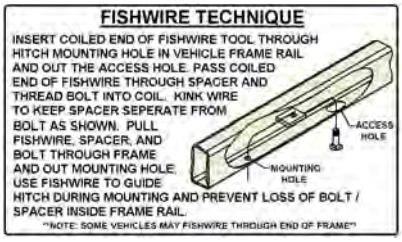

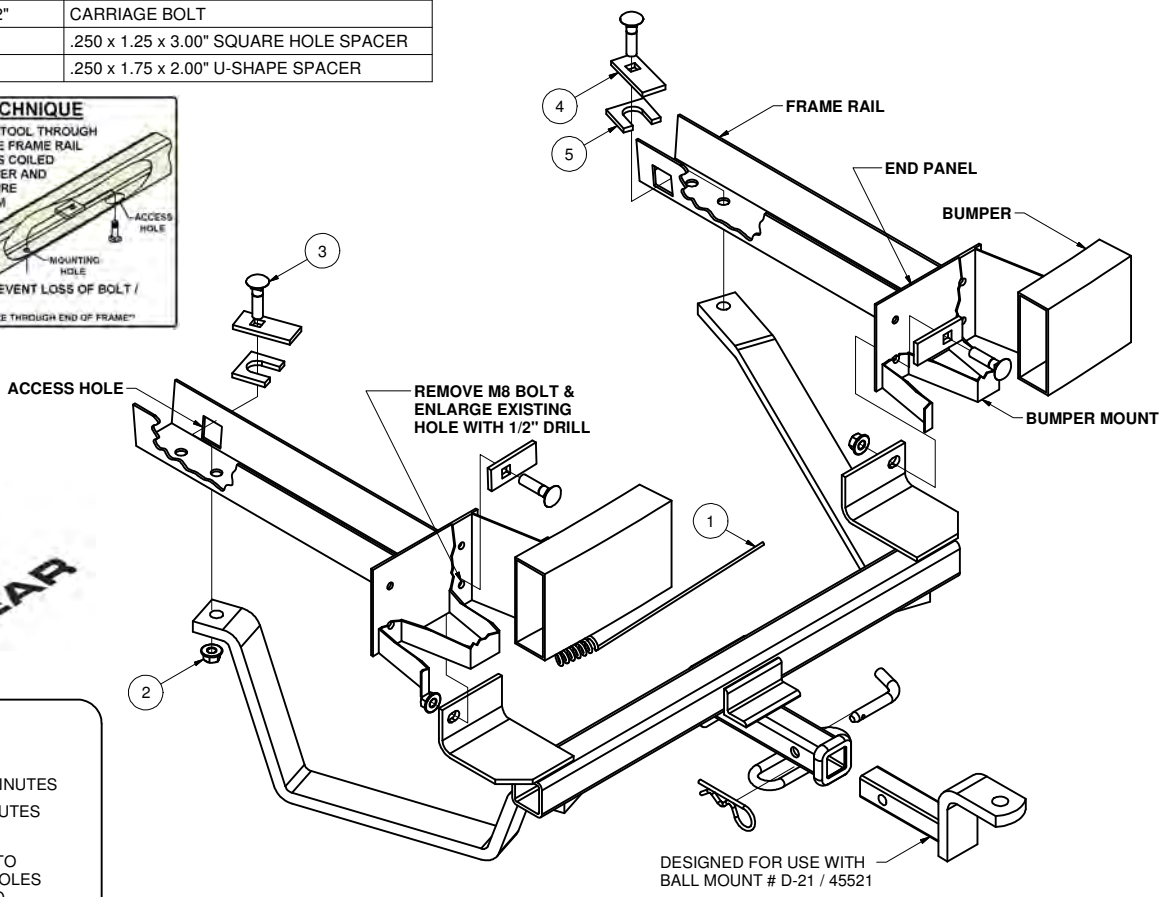



HITCH WEIGHT: 36 LBS.

INSTALL TIME

PROFESSIONAL: 45 MINUTES

NOVICE (DIY): 90 MINUTES

INSTALL NOTES:

-DRILLING REQUIRED TO
-ENLARGE EXISTING HOLES
-FISHWIRE BOLTS INTO
ENLARGED HOLES

INSTALLATION STEPS

1) Remove existing M8 bumper bolts located on the inboard side of frame end panel (both sides).
Hint: Break off plastic tab and unscrew bolt from frame.

2) Enlarge existing holes with a 1/2" drill bit.

3) Raise hitch into position, aligning hitch with holes in vehicle end panel and holes in bottom of frame rail.

4) Install carriage bolt and block through holes in end panel and hitch upright bracket.

5) Fishwire the 1/2" carriage bolt and blocks inside frame rail through access hole. The "C" shaped block goes in first, next to the frame as shown.

6) **NOTE: Be sure to keep "C" shaped block centered around hole inside frame rail.**

7) Torque all 1/2 handle nut to 110 LB.-FT (do not use impact wrench). Torque all 1/2 fasteners to 110 LB-FT

PERIODICALLY CHECK THIS RECEIVER HITCH TO ENSURE THAT ALL FASTENERS ARE TIGHT AND THAT ALL STRUCTURAL COMPONENTS ARE SOUND.

Curt Manufacturing Inc., warrants this product to be free of defects in material and/or workmanship at the time of retail purchase by the original purchaser. If the product is found to be defective, Curt Manufacturing Inc., may repair or replace the product, at their option, when the product is returned, prepaid, with proof of purchase. Alteration to, misuse of, or improper installation of this product voids the warranty. Curt Manufacturing Inc.'s liability is limited to repair or replacement of products found to be defective, and specifically excludes liability for incidental or consequential loss or damage.