12086 HYUNDAI GENESIS

11/12/2012

GROSS LOAD CAPACITY WHEN USED AS A WEIGHT CARRYING HITCH: 3,500 LBS. TRAILER WEIGHT & 350 LBS. TONGUE WEIGHT.
*****DO NOT EXCEED VEHICLE MANUFACTURER'S RECOMMENDED TOWING CAPACITY.*****

Parts List			
ITEM	QTY	PART NUMBER	DESCRIPTION
1	4	1/2-13 x 1 3/4	CARRIAGE BOLT
2	4	CM-SP6	.250 x 1.00 x 3.00" SQUARE HOLE SPACER
3	4	HFN 1213	HEX FLANGE NUT
4	2	1_2 FISHWIRE	1/2" FISHWIRE

FISHWIRE TECHNIQUE

INSERT COILED END OF FISHWIRE TOOL THROUGH HITCH MOUNTING HOLE IN VEHICLE FRAME RAIL AND OUT THE ACCESS HOLE. PASS COILED END OF FISHWIRE THROUGH SPACER AND THREAD BOLT INTO COIL. KINK WIRE TO KEEP SPACER SEPERATE FROM BOLT AS SHOWN. PULL FISHWIRE, SPACER, AND BOLT THROUGH FRAME AND OUT MOUNTING HOLE. USE FISHWIRE TO GUIDE HITCH DURING MOUNTING AND PREVENT LOSS OF BOLT / SPACER INSIDE FRAME RAIL.

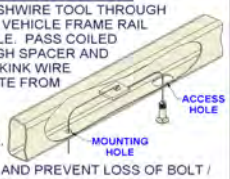

NOTE: SOME VEHICLES MAY FISHWIRE THROUGH END OF FRAME

RUBBER ISOLATOR REMOVAL DIAGRAM

This technique can be used if an Exhaust Hanger Removal Pliers is not available.

Using a 5/8" open end wrench, slide the wrench up to the rubber isolator, cradling the hanger rod as shown. Next place the flat edge of a pry bar between the wrench and the hanger stop or hanger rod. Then simply rotate the pry bar toward the wrench to remove the rubber isolator.

Note: Using a spray lubricant or soapy water on the hanger rod and the rubber isolator helps removal.



TOOLS REQUIRED
DRILL W/ 17/32" DRILL BIT
RATCHET
10mm, 19mm SOCKET
3/4" SOCKET
TORQUE WRENCH
AVIATOR SHEARS
PENCIL / MARKER

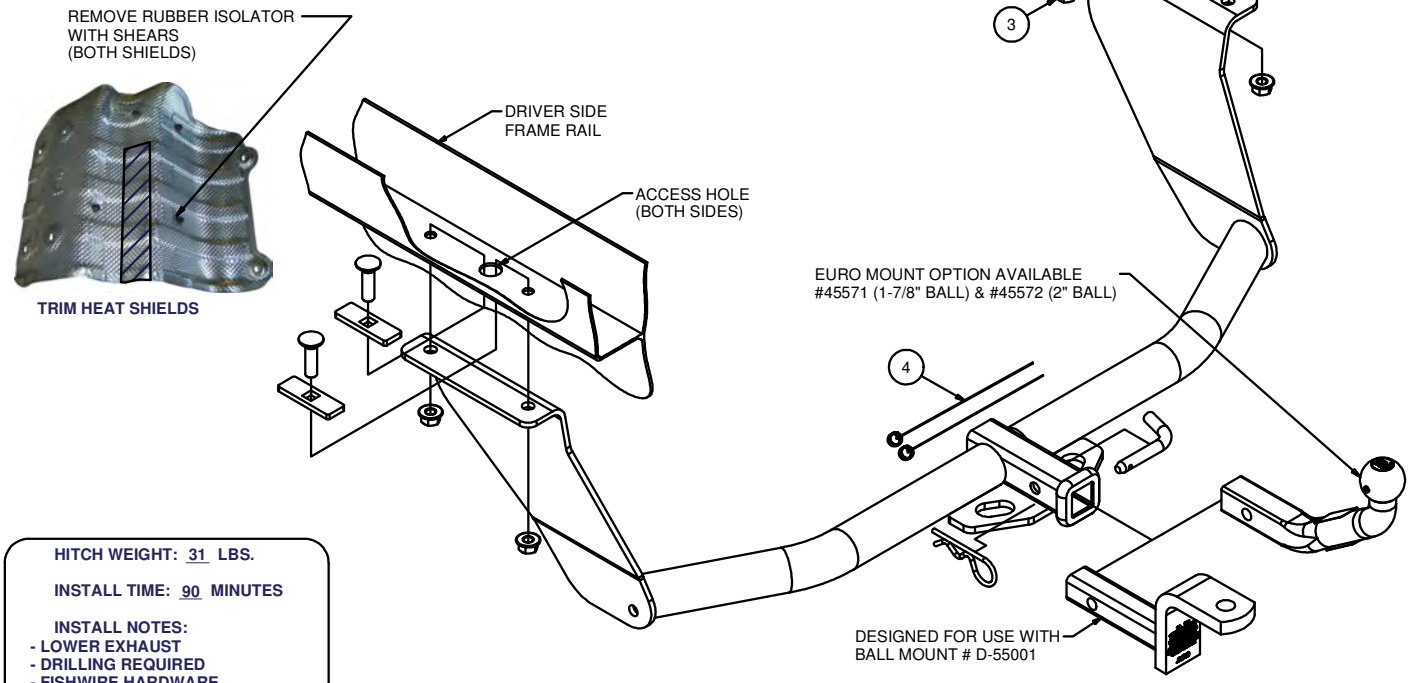

TRIM HEAT SHIELDS

HITCH WEIGHT: 31 LBS.

INSTALL TIME: 90 MINUTES

INSTALL NOTES:
- **LOWER EXHAUST**
- **DRILLING REQUIRED**
- **FISHWIRE HARDWARE**
- **TRIM HEAT SHIELD**
- **2 PERSON INSTALL RECOMENDED**

INSTALLATION STEPS

1) On 2012 models remove (2) nuts with a 19mm socket in front of mufflers each side. Remove (4) rear rubber exhaust isolators, and gently lower exhaust. Remove heat shields by removing (6) screws with a 10mm socket, both sides.

2) Raise hitch into position, center and square to frame rails and vehicle, just after the frame angles downward. Mark and drill (4) holes with 17/32" drill bit for 1/2" fasteners.

3) Lower hitch and fishwire bolts and spacers into position as shown in the diagrams above.

4) Raise hitch back into position and install supplied hex flange nuts. Torque all 1/2" fasteners to 110 lb-ft.

5) Modify heat shields as shown above and reinstall with original fasteners. Raise exhaust and reinstall (4) rubber exhaust isolators removed in step (1). On 2012 models bolt exhaust back together with original fasteners.

PERIODICALLY CHECK THIS RECEIVER HITCH TO ENSURE THAT ALL FASTENERS ARE TIGHT AND THAT ALL STRUCTURAL COMPONENTS ARE SOUND.

Curt Manufacturing Inc., warrants this product to be free of defects in material and/or workmanship at the time of retail purchase by the original purchaser. If the product is found to be defective, Curt Manufacturing Inc., may repair or replace the product, at their option, when the product is returned, prepaid, with proof of purchase. Alteration to, misuse of, or improper installation of this product voids the warranty. Curt Manufacturing Inc.'s liability is limited to repair or replacement of products found to be defective, and specifically excludes liability for incidental or consequential loss or damage.