12089 86-97 FORD AEROSTAR

11/19/2012

GROSS LOAD CAPACITY WHEN USED AS A WEIGHT CARRYING HITCH: 3,500 LBS. TRAILER WEIGHT & 350 LBS. TONGUE WEIGHT.
*****DO NOT EXCEED VEHICLE MANUFACTURER'S RECOMMENDED TOWING CAPACITY.*****

Parts List			
ITEM	QTY	PART NUMBER	DESCRIPTION
1	1	1/2"	FISHWIRE TOOL
2	4	HFN 1213	HEX FLANGE NUT
3	4	CM-SP1	.250 x 1.50 x 2.00" SQUARE HOLE SPACER
4	4	1/2-13 x 1 3/4	CARRIAGE BOLT

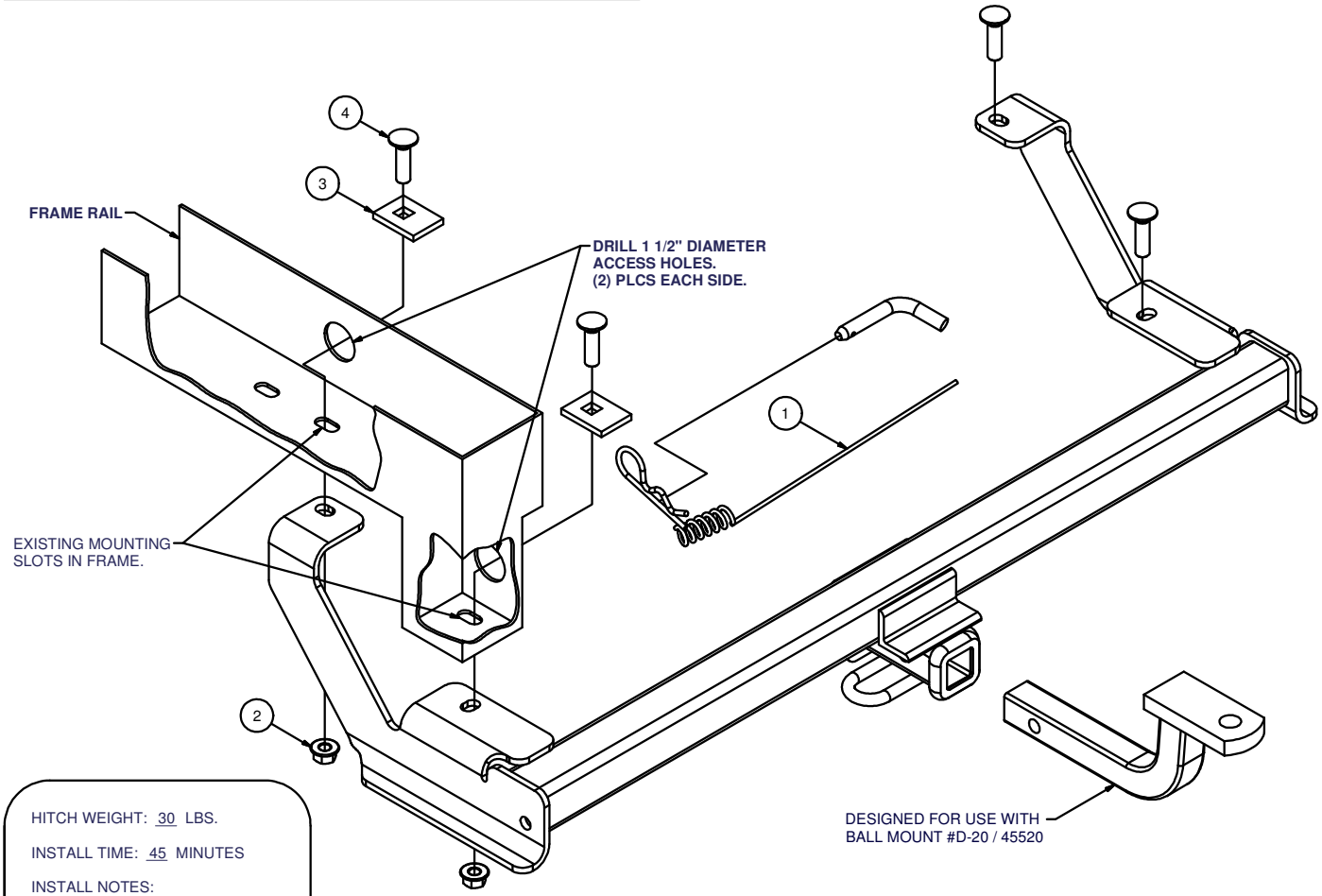

HITCH WEIGHT: 30 LBS.

INSTALL TIME: 45 MINUTES

INSTALL NOTES:
- DRILLING REQUIRED
- FISHWIRE HARDWARE

INSTALLATION STEPS

1. Lower spare tire and remove guide bolted to frame.
2. Drill 1 1/2" dia. access hole in two positions illustrated above. Repeat operation for other side.
3. Fishwire 1/2" carriage bolt and spacer block through the access hole to forward hole in frame. Fishwire 1/2" carriage bolt and block through access hole located in frame box as shown. Repeat operation for other side.
4. Lift hitch into position and attach appropriate hardware as shown. Repeat operation for other side.
5. Tighten all fasteners to 110 lb-ft.
6. Raise spare tire back into position using hitch as a guide.

PERIODICALLY CHECK THIS RECEIVER HITCH TO ENSURE THAT ALL FASTENERS ARE TIGHT AND THAT ALL STRUCTURAL COMPONENTS ARE SOUND.

Curt Manufacturing Inc., warrants this product to be free of defects in material and/or workmanship at the time of retail purchase by the original purchaser. If the product is found to be defective, Curt Manufacturing Inc., may repair or replace the product, at their option, when the product is returned, prepaid, with proof of purchase. Alteration to, misuse of, or improper installation of this product voids the warranty. Curt Manufacturing Inc.'s liability is limited to repair or replacement of products found to be defective, and specifically excludes liability for incidental or consequential loss or damage.