12163 INSTALLATION INSTRUCTIONS

Safety glasses should be worn at all times while installing this product.

YEARS: 2016-PRESENT | MAKE: MERCEDES | MODEL: CLA 250 | STYLE: SEDAN

WARNING: NEVER EXCEED YOUR VEHICLE MANUFACTURER'S RECOMMENDED TOWING CAPACITY
For more information log onto www.curtmfg.com & for helpful towing tips log onto www.hitchinfo.com

WEIGHT CARRYING:

TRAILER WEIGHT: 3,500 LBS.
TONGUE WEIGHT: 350 LBS.

WARNING:
WE RECOMMEND THE USE OF 18050 STABILIZING STRAPS FOR ALL NON-TRAILER (WHEEL-LESS) LOADS. PLEASE SEE THE CURT CATALOG OR VISIT US ONLINE AT WWW.CURTMFG.COM FOR FURTHER INFORMATION.

PRO INSTALL TIME: 30 MIN.
NOVICE INSTALL TIME: 60 MIN.

IF YOU ARE HESITANT TO UNDERTAKE THIS TASK ON YOUR OWN, CONTACT AN AUTHORIZED CURT INSTALLER FOR ADDITIONAL ASSISTANCE.

INSTALLATION REQUIRES:


RATCHET


TORQUE WRENCH


6" SOCKET EXTENSION


8mm
10mm
16mm
SOCKET


MASKING TAPE


AVIATION SHEARS


SAFETY GLASSES


TAPE MEASURE


PRY BAR


SILICONE SEALANT

INSTALLATION TIPS:

1. BEFORE YOU BEGIN INSTALLATION, READ ALL INSTRUCTIONS THOROUGHLY.
2. TO EASE INSTALLATION, 2 PEOPLE MAY BE REQUIRED.
3. USING PROPER TOOLS WILL GREATLY IMPROVE THE QUALITY OF THE INSTALL AND REDUCE THE TIME REQUIRED.
4. NEED HELP OR HAVE SOME QUESTIONS? CALL TECHNICAL SUPPORT AT 800.798.0813

LEVEL OF DIFFICULTY: MODERATE

EASY | MODERATE | CHALLENGING

	NO DRILLING REQUIRED
	TRIMMING REQUIRED
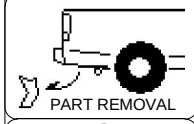	TEMPORARILY REMOVE UNDERBODY PANEL AND BUMPER PANEL
	LOWER EXHAUST
	SEAL FRAME RAIL WITH SILICONE SEALANT

VEHICLE PHOTO:



REPRESENTATIVE PHOTO

HITCH ILLUSTRATION:

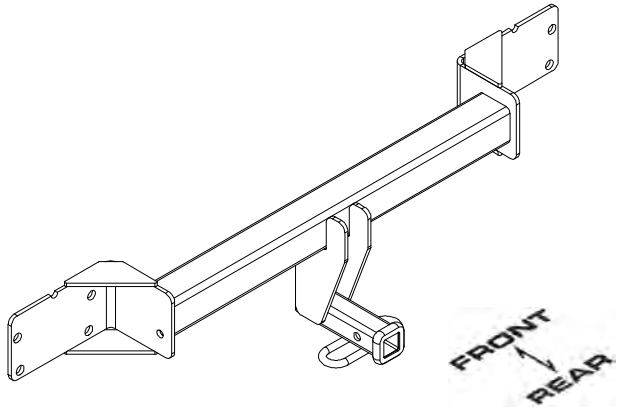

MAKE SURE YOUR HITCH MATCHES

SCAN FOR MORE INFO

PERIODICALLY CHECK THIS RECEIVER HITCH TO ENSURE ALL FASTENERS ARE TIGHT AND ALL STRUCTURAL COMPONENTS ARE SOUND

CURT Manufacturing LLC. warrants this product to be free of defects in material and/or workmanship at the time of retail purchase by the original purchaser. If the product is found to be defective, CURT Manufacturing LLC. may repair or replace the product at their option, when the product is returned, prepaid, with proof of purchase. Alteration to, misuse of, or improper installation of this product voids the warranty. CURT Manufacturing LLC.'s liability is limited to repair or replacement of products found to be defective, and specifically excludes liability for incidental or consequential loss or damage.

For more information log onto www.curtmfg.com , & for helpful towing tips log onto www.hitchinfo.com

This product complies with safety specifications and requirements for connecting devices and towing systems of the state of New York, V.E.S.C.Regulation V-5 and SAE J684.

7/18/2017

INSTALLATION WALKTHROUGH:

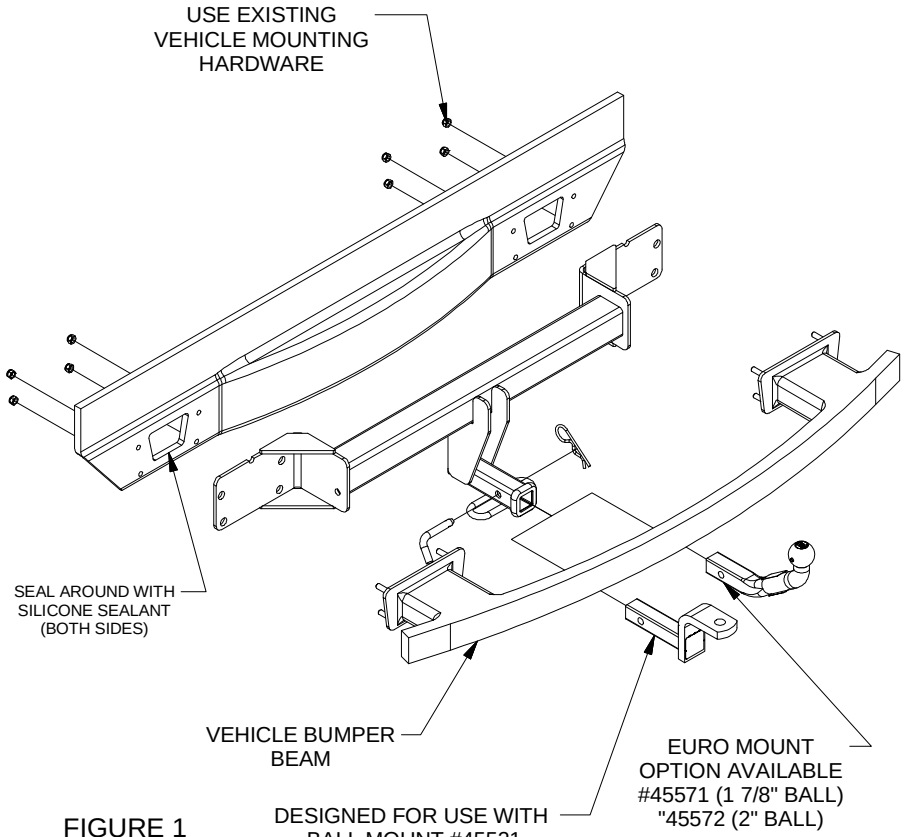

FIGURE 1

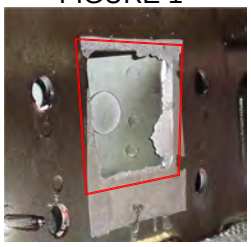



1. Lower exhaust by locating and removing (2) E12 Torx bolts, (1) on each side.





2. At the bottom of the wheel well, locate and remove (6) push pins, (3) on each side using a pry tool. Pull back part of wheel well to reveal (4) push pins, (2) on each side and remove using a pry tool.





INSTALLATION WALKTHROUGH:

3. Locate on the underbody panel and remove (6) nuts, (3) on each side using an 8mm socket. Remove underbody panel and mark out a 2" x 4" section using masking tape and trim using aviation shears. Set underbody panel aside for later reinstallation.



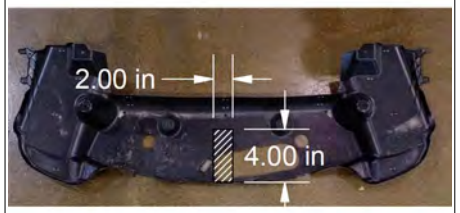

UNDERBODY PANEL TRIM DIAGRAM

4. On the fascia supports, locate and remove (2) bolts, (1) on each side using a 10mm socket. Gently remove the lower portion of fascia connected to the bumper fascia. Set aside for later reinstallation.





5. Locate the bumper beam connection points and remove (8) nuts, (4) from each side using a 16mm socket. Remove bumper beam by pulling bumper towards rear of car while twisting the bumper beam up towards the top of the vehicle. Set aside for later reinstallation. **NOTE:** Use silicone sealant around openings of the frame rail on each side as shown in FIGURE 1.





6. Place bumper beam onto hitch aligning the studs with the holes on the hitch. Raise hitch into position with the bumper beam, tucking them underneath the bumper fascia and then twisting bumper beam to reinstall. Loosely fasten using nuts removed from Step 5.





For more information log onto www.curtmfg.com, & for helpful towing tips log onto www.hitchinfo.com

INSTALLATION WALKTHROUGH:

7. Using 16mm socket and torque wrench, torque all existing hardware to 45 ft-lbs. Reinstall following steps 1-5 in reverse order.



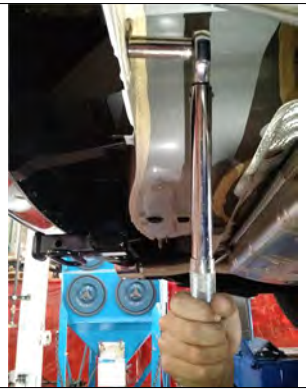

TOWING SAFETY INFORMATION

Gross Trailer Weight / GTW

The Gross Trailer Weight is the weight of the trailer & cargo.
Measure this by putting the fully loaded trailer on a vehicle scale.



Tongue Weight / TW

The downward force that is exerted on the hitch ball by the coupler. The tongue weight will vary depending on where the load is positioned in relationship to the trailer axle(s). To measure the tongue weight, use either a commercial scale or a bathroom scale with the coupler at towing height. When using a bathroom scale with heavier tongue weights, use the method shown and multiply the scale reading by 3.

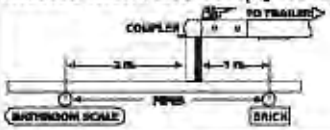

Weight Carrying / WC

The total weight of both the trailer and the cargo inside.
Never exceed the weight capacity of your trailer hitch.

Weight Distribution / WD

Used to balance the weight of the cargo between the front and rear wheels throughout the trailer, allowing for better steering, braking, and level riding.



Sway Control

A device used to reduce the lateral movements of the trailer that are caused by the wind. This works in conjunction with a weight distribution hitch. Do not use this on a class 1 or 2 hitch, or with surge brakes.

How Much Can You Safely Tow?

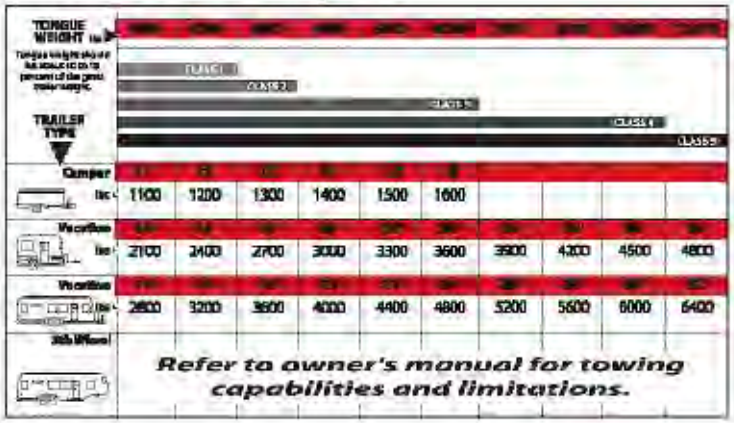

Ball Mount

The ball mount is placed inside the opening of the receiver hitch which is mounted to the vehicle. Make sure a hitch pin and clip is properly securing the ball mount to the receiver hitch before you begin towing.

- A: Rise. B: Drop. C: Hole Size. D: Length.

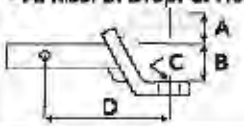

Trailer Ball

The connection from the hitch to the trailer. There are many factors that determine the correct hitch ball:

- Number one is the hitch ball's gross trailer weightrating.
- The mounting platform must be at least 3/8" thick.
- The hole diameter must not be more than 1/16" larger than the threaded shank.
- Every time you tow, check the nut and lock washer to make sure they are fastened securely.
- A: Ball Dia. B: Shank Dia. C: Shank Length. D: Shank Rise.



Coupler

The component that is placed over the trailer ball to connect the vehicle to the trailer. Be sure that the coupler size matches the size of the hitch ball and that the coupler handle is securely fastened. To determine what size hitch ball you need for your application you will need to know the size of coupler that is on the trailer. Be sure your coupler is properly adjusted to the ball you are using.
NOTE: For added security the use of safety devices such as Coupler Safety Pins and Locks is strongly recommended.

Safety Chains

Safety chains are a requirement and should be crossed under the tongue of the trailer so that the tongue will not drop to the road if it becomes separated from the hitch. Always leave enough slack so you can turn. Never allow the safety chains to drag on the ground and never attach the chains to the bumper.
Trailer Classification: Safety Chain Breaking Force - Minimum
Class 1: 2,000 lbs. (8.9 kN)
Class 2: 3,500 lbs. (15.6 kN)
Class 3: 5,000 lbs. (22.2 kN)
The strength rating of each length of safety chain or its equivalent and its attachments shall be equal to or exceed in minimum breaking force the GVWR (Gross Vehicle Weight Rating) of the trailer.

Electrical

Trailer lights, Electric Brakes, Break-away systems - Every time you tow, be sure to check that all components are working properly.

Wiring identification by color:



12163 MERCEDES CLA 250 SEDAN

GROSS LOAD CAPACITY WHEN USED AS A WEIGHT CARRYING HITCH: 3,500 LBS. TRAILER WEIGHT & 350 LBS. TONGUE WEIGHT.

WARNING: ALL NON-TRAILER LOADS APPLIED TO THIS PRODUCT MUST BE SUPPORTED BY 18050 STABILIZING STRAPS.

WARNING: ** FAILURE TO PROPERLY SUPPORT NON-TRAILER LOADS WILL VOID PRODUCT WARRANTY **

WARNING: *** DO NOT EXCEED VEHICLE MANUFACTURER'S RECOMMENDED TOWING CAPACITY ***

FOR MORE INFORMATION LOG ONTO WWW.CURTMFG.COM & FOR HELPFUL TOWING TIPS LOG ONTO WWW.HITCHINFO.COM
HAVING INSTALLATION QUESTIONS? CALL TECHNICAL SUPPORT AT 1-800-798-0813

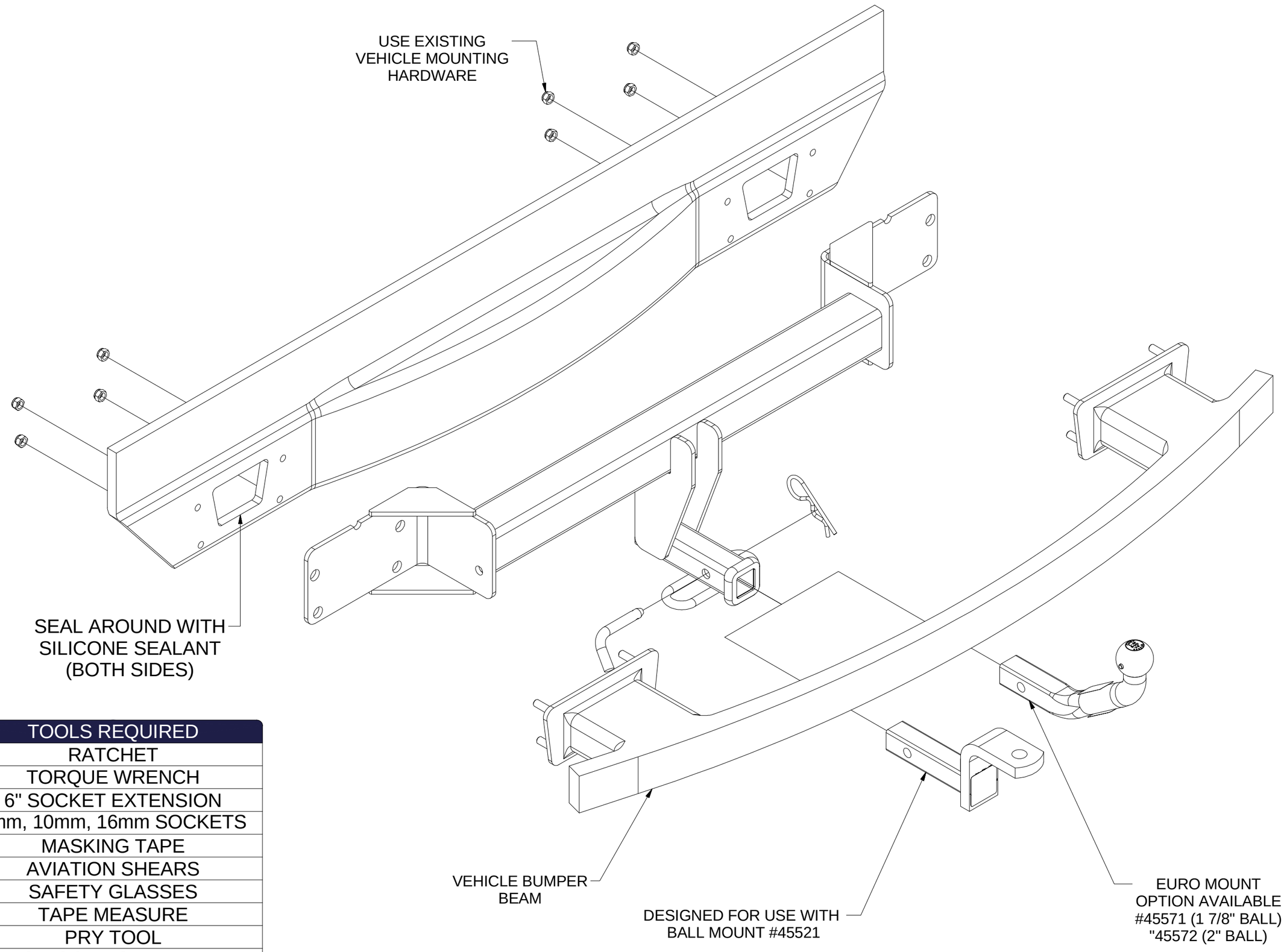

TOOLS REQUIRED
RATCHET
TORQUE WRENCH
6" SOCKET EXTENSION
8mm, 10mm, 16mm SOCKETS
MASKING TAPE
AVIATION SHEARS
SAFETY GLASSES
TAPE MEASURE
PRY TOOL
SILICONE SEALANT

HITCH WEIGHT: 29 LBS.

INSTALL TIME

PROFESSIONAL: 30 MINUTES

NOVICE (DIY): 60 MINUTES

INSTALL NOTES:

-NO DRILLING REQUIRED
-TRIMMING REQUIRED
-TEMPORARILY REMOVE UNDERBODY PANEL AND BUMPER PANEL
-LOWER EXHAUST
-SEAL FRAME RAIL WITH SILICONE SEALANT

RUBBER ISOLATOR REMOVAL DIAGRAM

This technique can be used if an Exhaust Hanger Removal Pliers is not available.

Using a 5/8" open end wrench, slide the wrench up to the rubber isolator, cradling the hanger rod as shown. Next place the flat edge of a pry bar between the wrench and the hanger stop or hanger rod. Then simply rotate the pry bar toward the wrench to remove the rubber isolator.

Note: Using a spray lubricant or soapy water on the hanger rod and the rubber isolator helps removal.

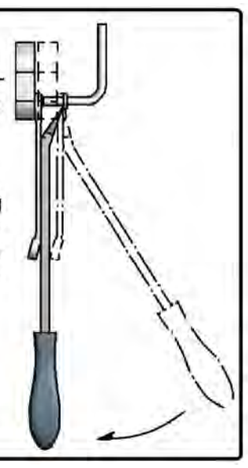

FIGURE 1

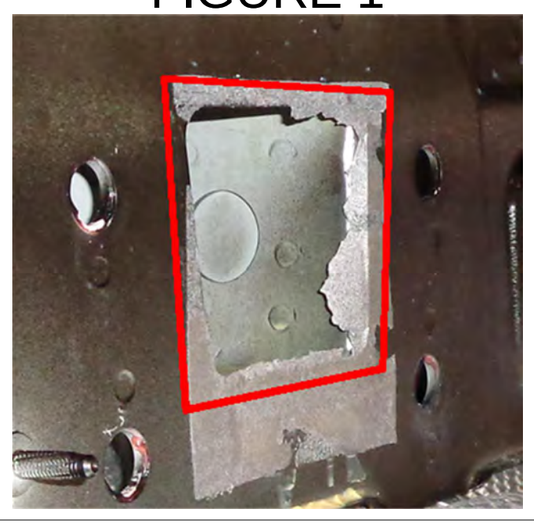



PERIODICALLY CHECK THIS RECEIVER HITCH TO ENSURE THAT ALL FASTENERS ARE TIGHT AND THAT ALL STRUCTURAL COMPONENTS ARE SOUND.

Scan for more information

CURT Manufacturing LLC., warrants this product to be free of defects in material and/or workmanship at the time of retail purchase by the original purchaser. If the product is found to be defective, CURT Manufacturing LLC., may repair or replace the product, at their option, when the product is returned, prepaid, with proof of purchase. Alteration to, misuse of, or improper installation of this product voids the warranty. CURT Manufacturing LLC.'s liability is limited to repair or replacement of products found to be defective, and specifically excludes liability for incidental or consequential loss or damage.

This product complies with safety specifications and requirements for connecting devices and towing systems of the state of New York, V.E.S.C.Regulation V-5 and SAE J684.

HAVING INSTALLATION QUESTIONS? CALL TECHNICAL SUPPORT AT 1-800-798-0813

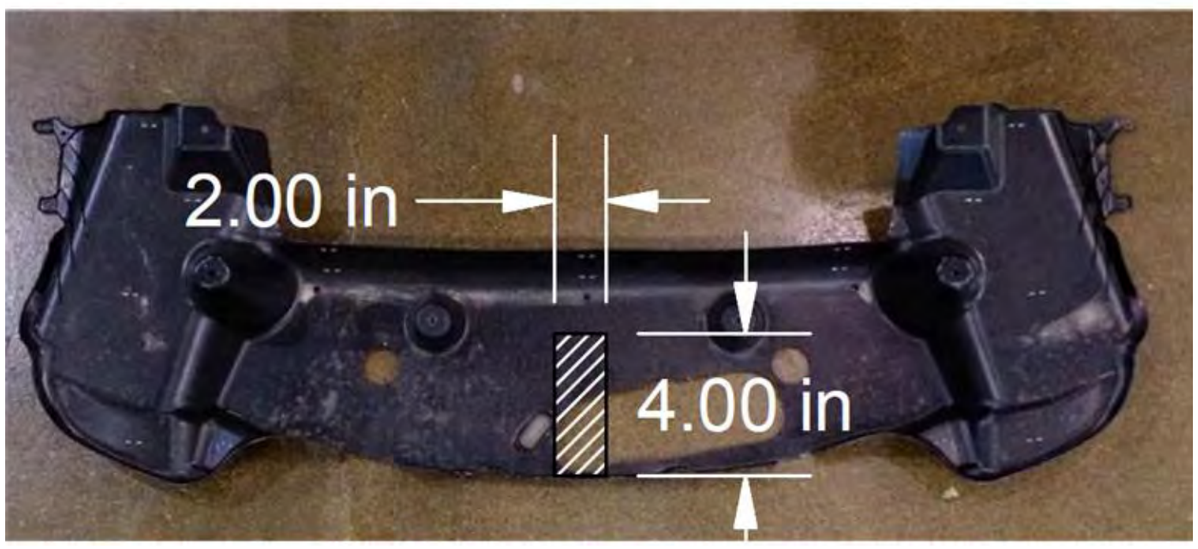

UNDERBODY PANEL
TRIM DIAGRAM

INSTALLATION STEPS

1. Lower exhaust by locating and removing (2) E12 Torx bolts, (1) on each side.

2. At the bottom of the wheel well, locate and remove (6) push pins, (3) on each side using a pry tool. Pull back part of wheel well to reveal (4) push pins, (2) on each side and remove using a pry tool.

3. Locate on the underbody panel and remove (6) nuts, (3) on each side using an 8mm socket. Remove underbody panel and mark out an 2” x 4” section using masking tape and trim using aviation shears. Set underbody panel aside for later reinstallation.

4. On the fascia supports, locate and remove (2) bolts, (1) on each side using a 10mm socket. Gently remove the lower portion of fascia connected to the bumper fascia. Set aside for later reinstallation.

5. Locate the bumper beam connection points and remove (8) nuts, (4) from each side using a 16mm socket. Remove bumper beam by pulling bumper towards rear of car while twisting the bumper beam up towards the top of the vehicle. Set aside for later reinstallation. **NOTE:** Use silicone sealant around openings of the frame rail on each side as shown in FIGURE 1.

6. Place bumper beam onto hitch aligning the studs with the holes on the hitch. Raise hitch into position with the bumper beam, tucking them underneath the bumper fascia and then twisting bumper beam to reinstall. Loosely fasten using nuts removed from Step 5.

7. Using 16mm socket and torque wrench, torque all existing hardware to 45 ft-lbs. Reinstall following steps 1-5 in reverse order.

PERIODICALLY CHECK THIS RECEIVER HITCH TO ENSURE THAT ALL FASTENERS ARE TIGHT AND THAT ALL STRUCTURAL COMPONENTS ARE SOUND.

CURT Manufacturing LLC., warrants this product to be free of defects in material and/or workmanship at the time of retail purchase by the original purchaser. If the product is found to be defective, CURT Manufacturing LLC., may repair or replace the product, at their option, when the product is returned, prepaid, with proof of purchase. Alteration to, misuse of, or improper installation of this product voids the warranty. CURT Manufacturing LLC.'s liability is limited to repair or replacement of products found to be defective, and specifically excludes liability for incidental or consequential loss or damage.

This product complies with safety specifications and requirements for connecting devices and towing systems of the state of New York, V.E.S.C.Regulation V-5 and SAE J684.