12339

TOYOTA CAMRY (97-06) / SOLARA (99-03) / AVALON (95-04)
LEXUS ES300 (97-01) / ES330 (02-06)

9/27/2017

GROSS LOAD CAPACITY WHEN USED AS A WEIGHT CARRYING HITCH: 3500 LBS. TRAILER WEIGHT & 300 LBS. TONGUE WEIGHT.

DO NOT EXCEED VEHICLE MANUFACTURER'S RECOMMENDED TOWING CAPACITY.

WARNING: ALL NON-TRAILER LOADS APPLIED TO THIS PRODUCT MUST BE SUPPORTED BY AUXILIARY STABILIZING STRAPS.

** FAILURE TO PROPERLY SUPPORT NON-TRAILER LOADS WILL VOID PRODUCT WARRANTY**

HAVING INSTALLATION QUESTIONS? CALL TECHNICAL SUPPORT AT 1-800-798-0813

Parts List			
ITEM	QTY	PART NUMBER	DESCRIPTION
1	6	M10 - 1.25 x 30	HEX BOLT
2	2	HFN3816	HEX FLANGE NUT
3	1	CM-3809-UBS	3/8-16 x 1.000 x 2.50 SQ U-BOLT
4	6	3/8"	CONICAL TOOTHED WASHER

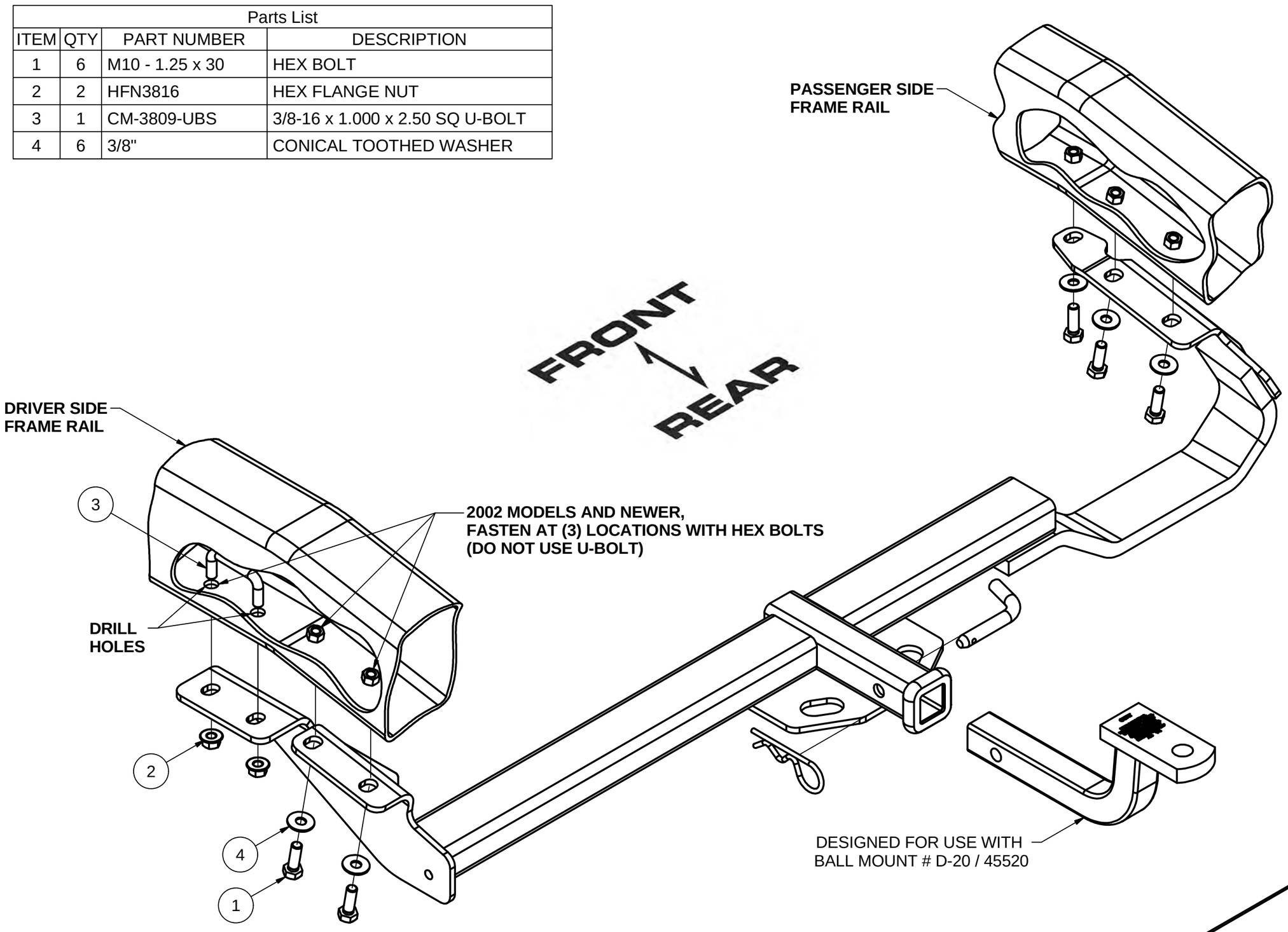

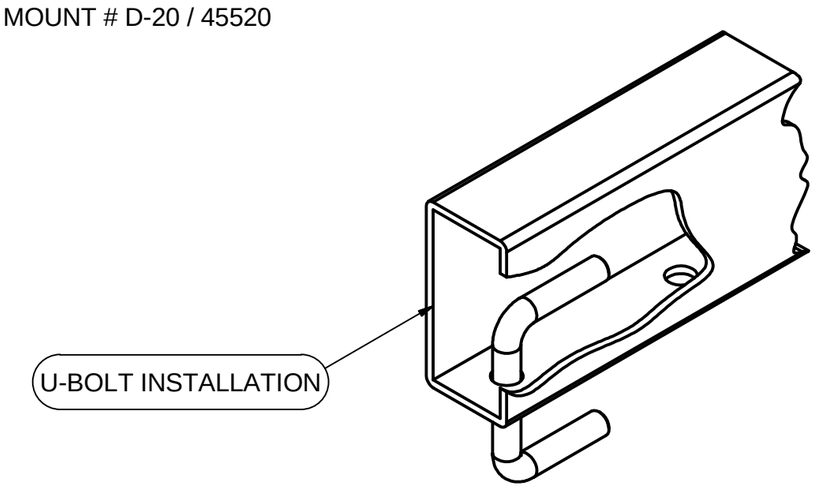

HITCH WEIGHT: 36 LBS.

INSTALL TIME

PROFESSIONAL: 45 MINUTES

NOVICE (DIY): 90 MINUTES

INSTALL NOTES:

- DRILLING REQUIRED
- REMOVE TIE DOWN BRACKETS
- REMOVE 1 HEAT SHIELD BOLT

INSTALLATION STEPS

1) Remove tie down brackets from both sides. (Return to customer) On passenger side remove rearmost heat shield bolt. (discard)

2) Raise hitch into position, loosely install 3/8" fasteners into existing weldnuts as shown.

3) Using hitch as a template, drill 2 holes for 3/8" U-bolt. Install U-bolt and secure with flange nuts as shown. (Note: Camry '02-up and solara 02'-03' use weldnut on driver side instead of U-bolt)

4) Torque all 3/8" fasteners to 45 ft-lbs and all M10 fasteners to 48 ft-lbs.

PERIODICALLY CHECK THIS RECEIVER HITCH TO ENSURE THAT ALL FASTENERS ARE TIGHT AND THAT ALL STRUCTURAL COMPONENTS ARE SOUND.

Curt Manufacturing Inc., warrants this product to be free of defects in material and/or workmanship at the time of retail purchase by the original purchaser. If the product is found to be defective, Curt Manufacturing Inc., may repair or replace the product, at their option, when the product is returned, prepaid, with proof of purchase. Alteration to, misuse of, or improper installation of this product voids the warranty. Curt Manufacturing Inc.'s liability is limited to repair or replacement of products found to be defective, and specifically excludes liability for incidental or consequential loss or damage.