Installation Instructions:
MN4
NISSAN FRONTIER
6'1" BED LENGTH
2005-CURRENT

TOOLS REQUIRED

- **Adjustable wrench** (that opens to about 1")
- **1/2" open end wrench**
- **#2 Phillips screwdriver,**
- **Short 7/32" hex wrench**
- **7/16" deep socket**
- **3/8" socket**
- **Electric drill**
- **9/64" drill bit**
- **7/16" drill bit**
- **5/16" drill bit**
- **Drill stop**
- **Self-etching primer** (available at most auto supply or hardware stores)

Watch installation videos at www.DECKED.com/video | Register your system at www.DECKED.com/warranty

FOLLOW US: @DECKEDUSA | #DECKEDUSA

VERSION 1

DECKED.COM | SERVICE@DECKED.COM | 208.806.0251

▼ HEY! TORQUE BOY: READ BEFORE YOU INSTALL DECKED ▼

1. **DON'T** over tighten bolts, get em' good 'ole hand-tight.
2. **DON'T** use power tools.
3. If you don't follow directions and do use power tools:
   1). Set clutch at a very low setting.
   2). Don't blow it.
   3). If you blow it, see NOTE.*

   NOTE* Two extra threaded inserts are included in BAG **PREP-EXTRA**. That's all you get.

4). **DON'T** over tighten J-hooks during installation. Make 'em good and snug enough to keep the system from moving in the bed.

5). Do read these instructions closely.

▼ ASSEMBLY OVERVIEW ▼

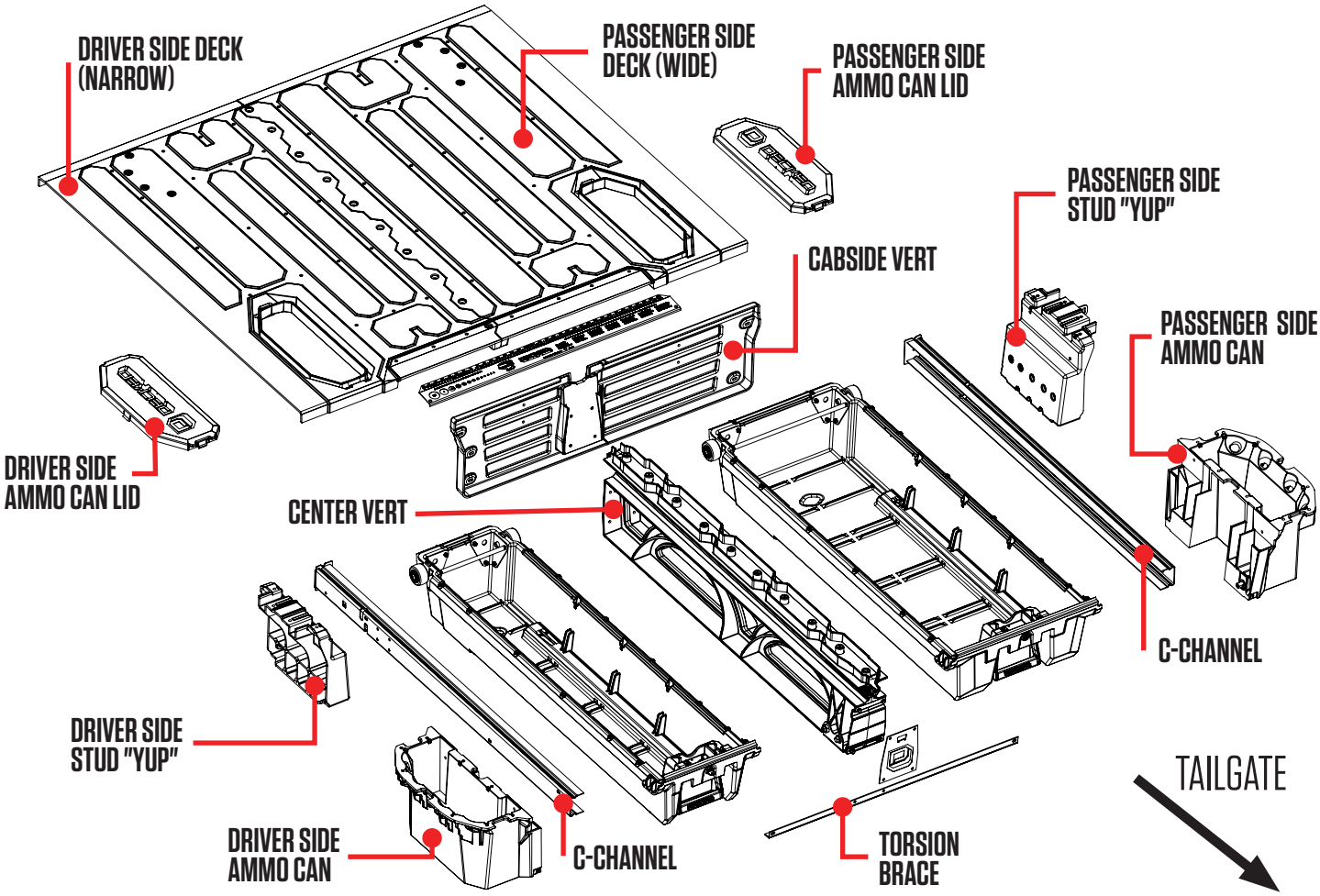

Need Help? Watch our installation videos or give us a call. We're happy to help!

SERVICE@DECKED.COM | 208.806.0251 | DECKED.COM/VIDEO

ASSEMBLY: CENTER VERT + CABSIDE VERT

NOTE: Perform the next few steps on a flat surface like a garage floor.

- Attach center vert to cabside vert with four bolts. Alternate to tighten; BAG **S1.**

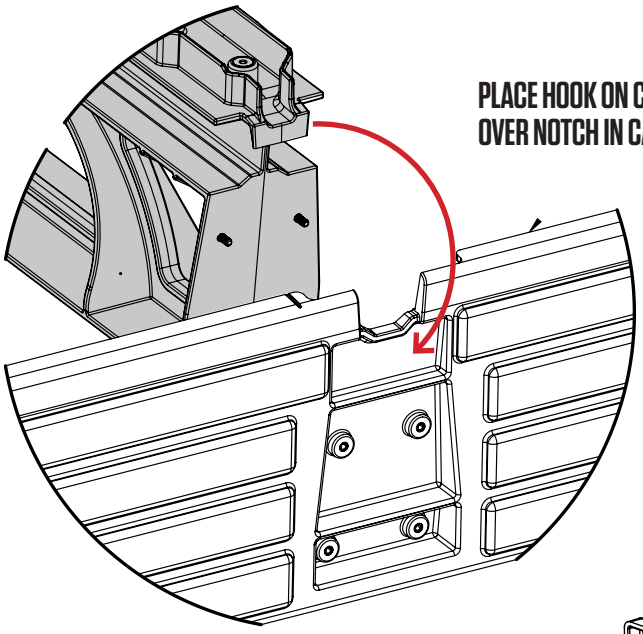

PLACE HOOK ON CENTER VERT
OVER NOTCH IN CABSIDE VERT

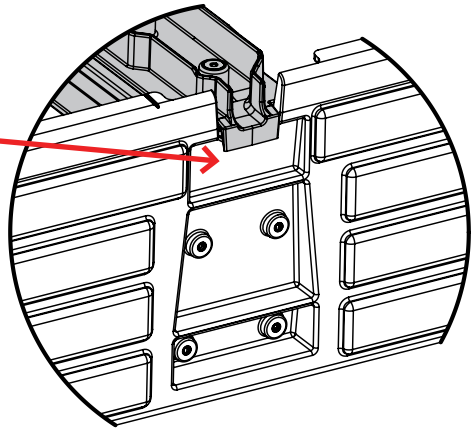

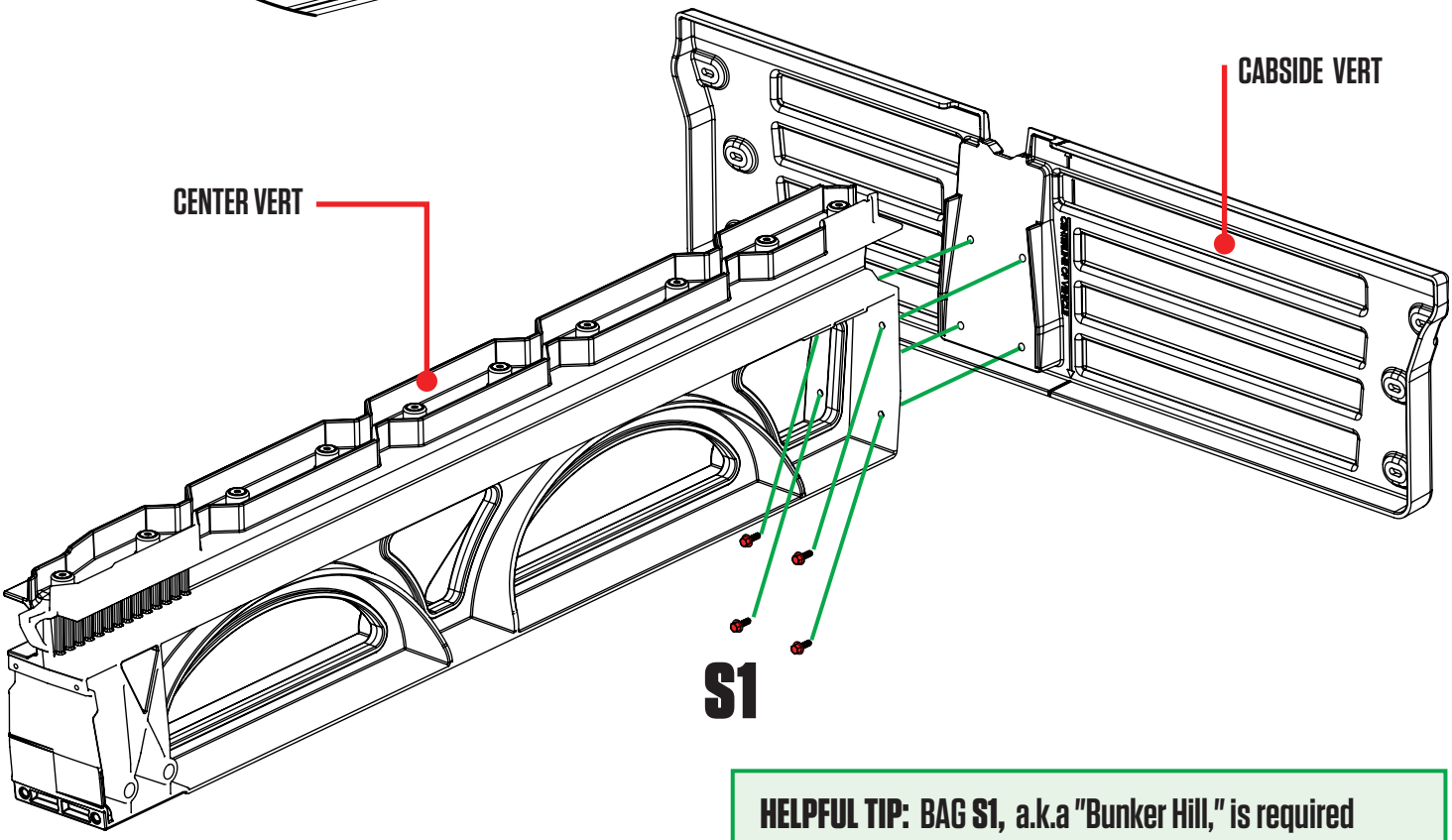

HELPFUL TIP: BAG **S1,** a.k.a "Bunker Hill," is required for most of the steps, so keep it close! These bolts are highlighted throughout instructions in **RED.**

ASSEMBLY: LOOSELY ATTACH STUDS (YUP)

- **LOOSELY** attach studs to cabside vert with six bolts; BAG **S1.**

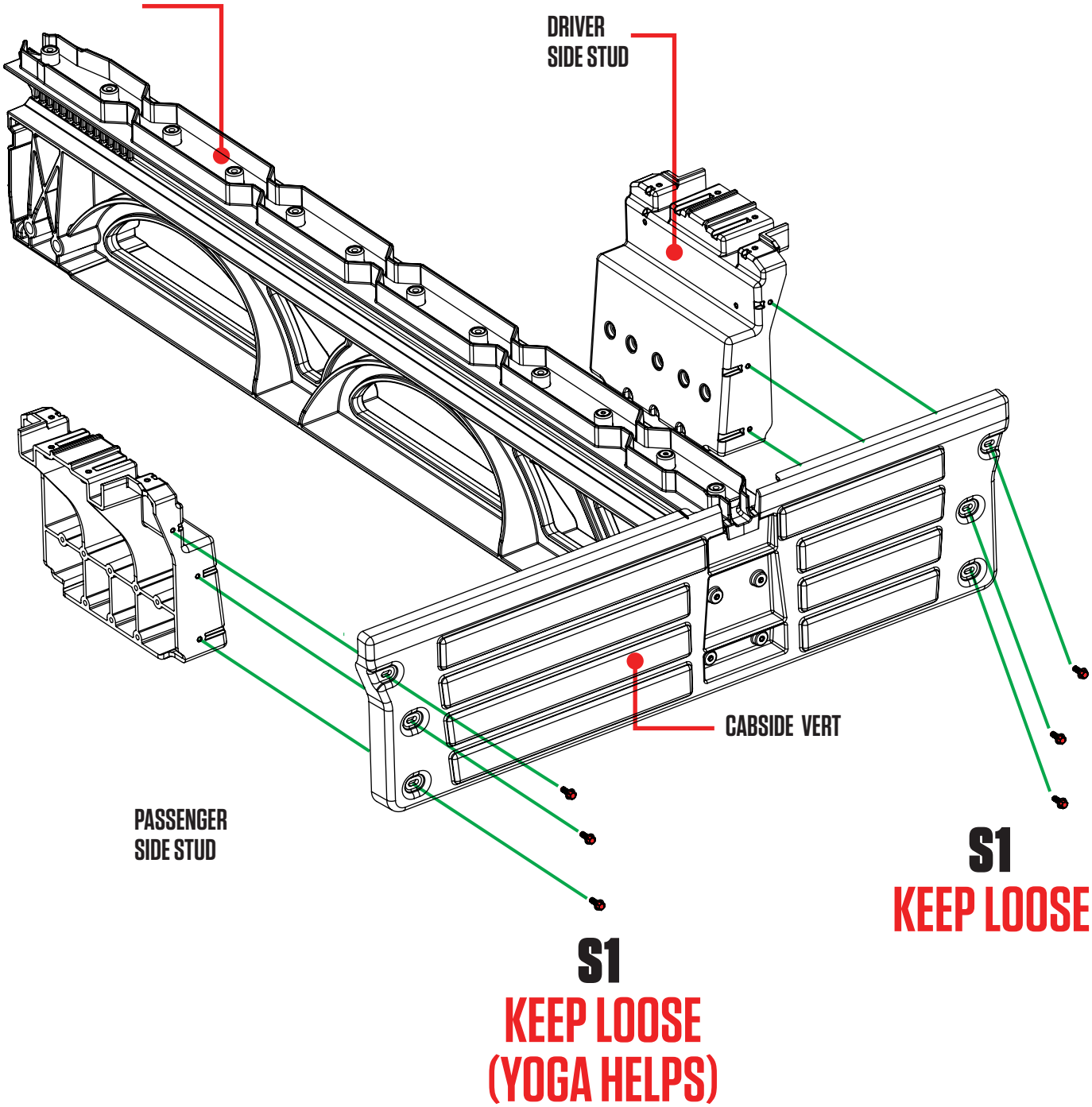

ASSEMBLY: ALIGN & TIGHTEN STUDS (YUP)

NOTE: This step ensures the studs are properly located before tightening bolts. It's important.

- Place ammo cans to support tailgate end of deck panels.
- Lift deck panels on center vert + stud + cabside vert assembly.
- Slide studs around L-R until deck panels are seated.
- **DETAIL A:** Loosely secure four bolts to hold decks onto studs; BAG **S1.**
- Now you can securely tighten the bolts that hold the studs to the cabside vert.
- Unbolt deck from studs, remove deck panels, save bolts, remove ammo cans and set aside for later assembly.

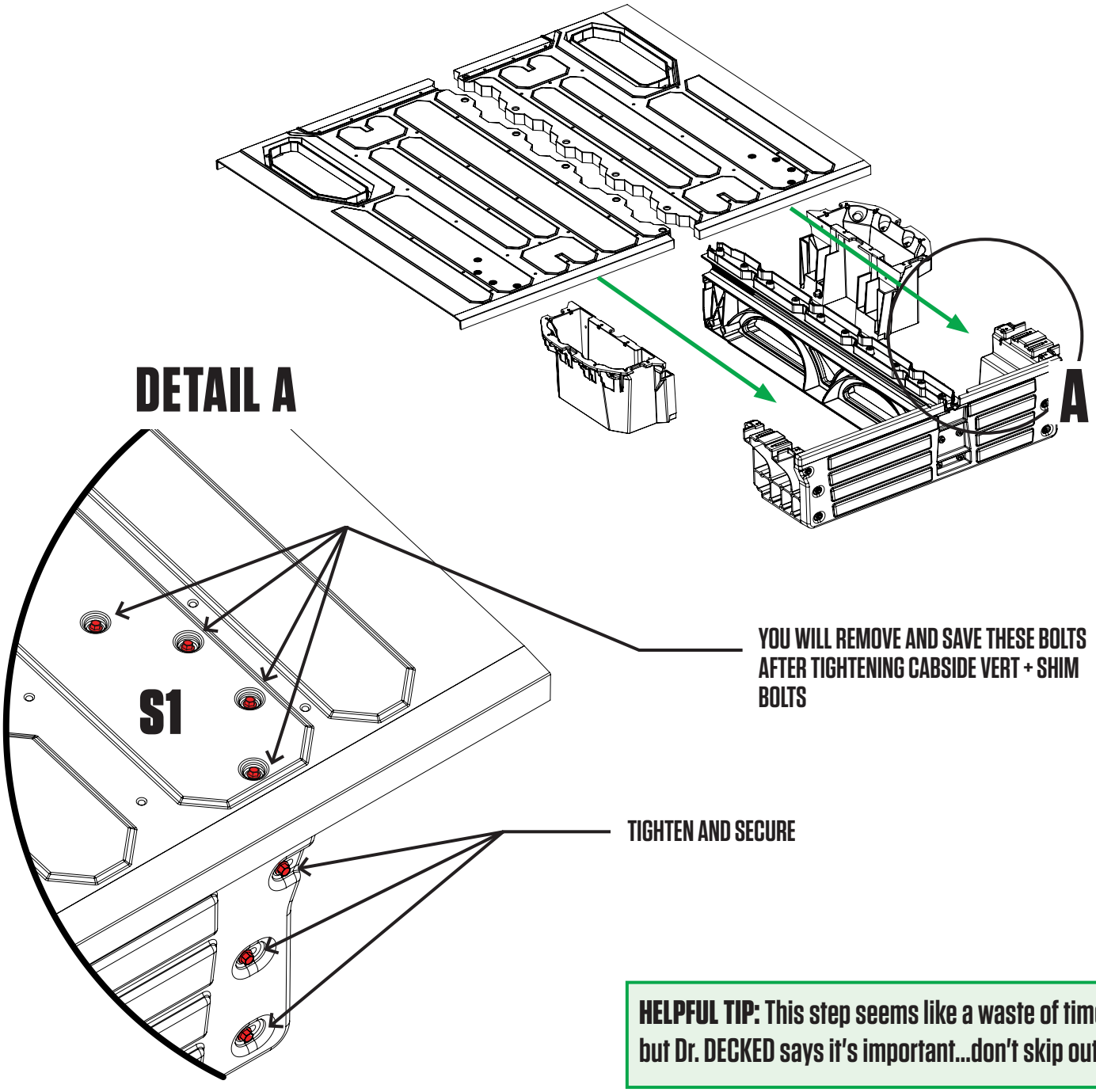

HELPFUL TIP: This step seems like a waste of time, but Dr. DECKED says it's important...don't skip out.

PREP BED: MARK CENTER OF BED

- Use a marking pen or wax pencil to mark a centerline (blue) on the raised center bead.

DETAIL A

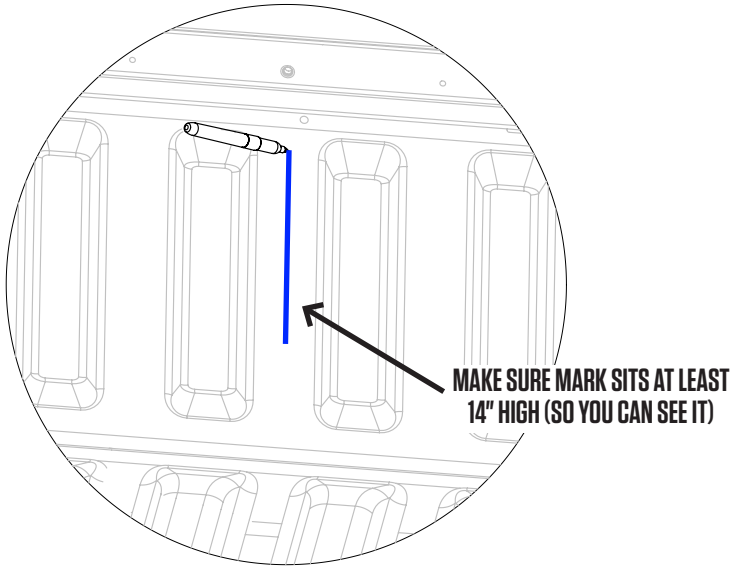

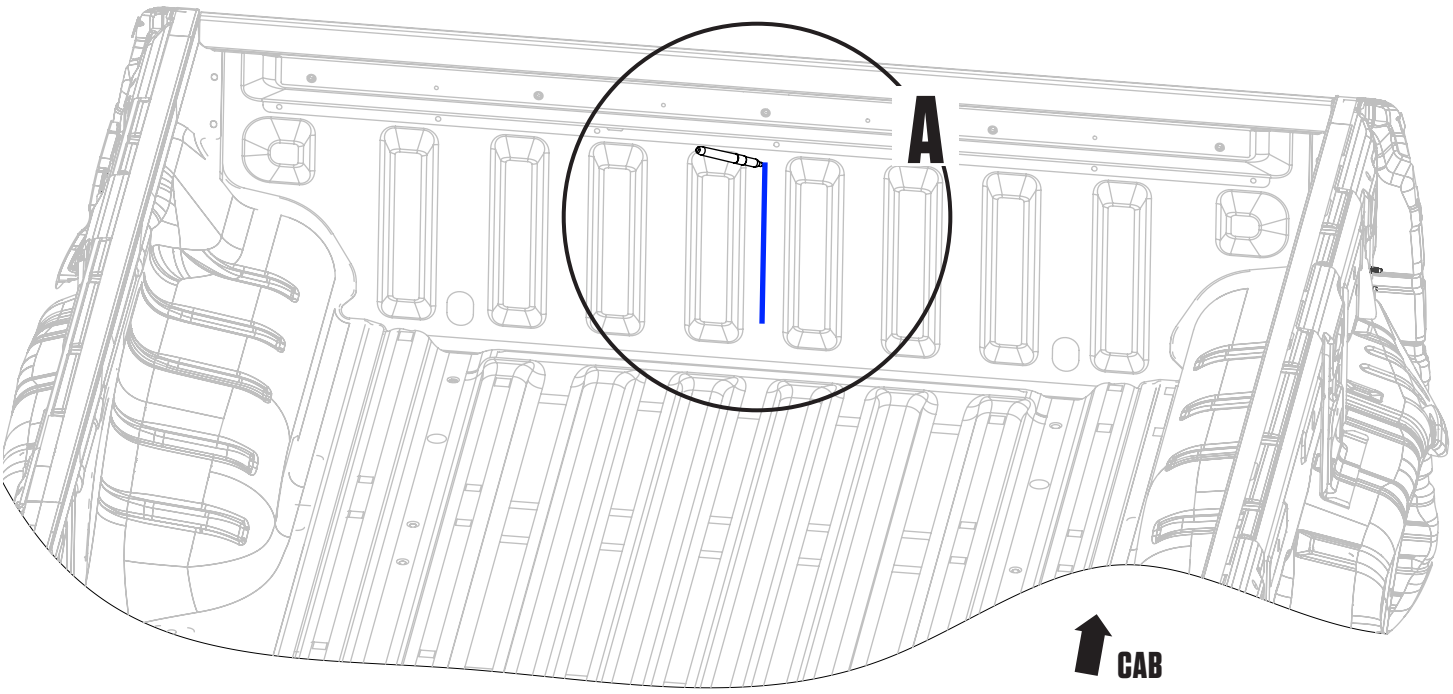

PREP BED: SHIMS

- **4 DOUBLE STACK SHIMS** that look like this can be found in your hardware kit.
- Using the information below:
    1) Clean the bed surface where the shims will be located. Isopropyl alcohol (do not drink) is recommended.
    2) Remove tape film and apply shim with the strength of 1000 men a.k.a push really hard.

DETAIL A

Align shim to channel in floor as shown. Place shim 7" from rear of bed (red).
Repeat passenger side.

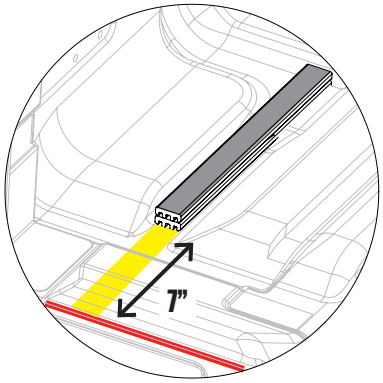

DETAIL B

Align shim to channel in floor shown. Place shim 7 3/4" from rear of bed (red).

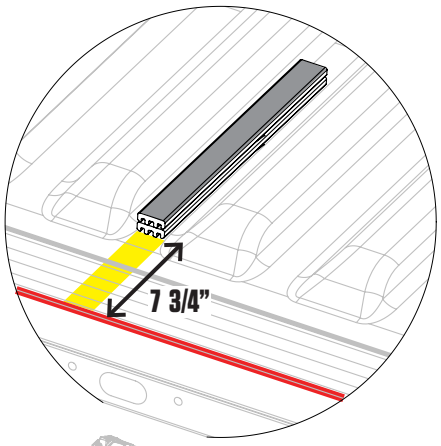

DETAIL C

Align shim to channel in floor shown. Place shim 1" from cabside panel of bed (red).

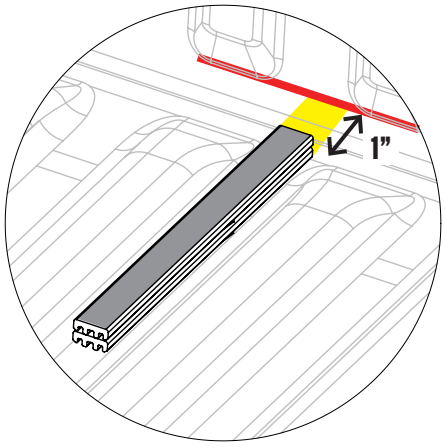

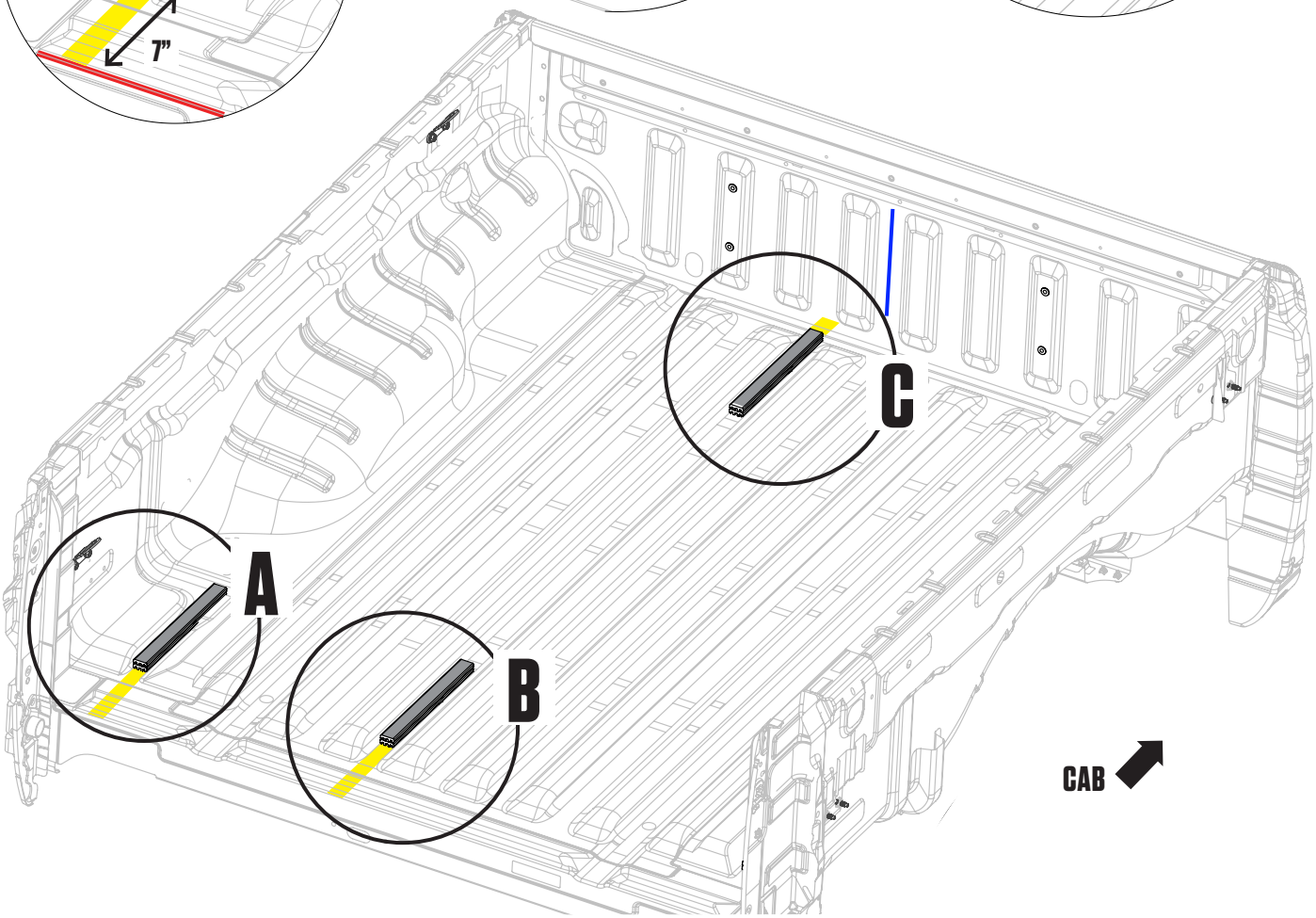

PREP BED: TAILGATE BRACKET

NOTE: You will need to grab a pal for this step (or have incredibly long and flexible arms).

- Remove factory tie down and bolts. Save all factory hardware.
- **DETAIL A:**
  - **STEP 1:** Mark bed as shown (green holes).
  - **STEP 2:** Drill two 5/16" holes that you marked with a 1/4" drill stop. **NOTE: To resist corrosion, seal the raw metal edges of the drilled holes with self-etching primer (available at most auto hardware stores).**
  - **STEP 3:** Play Rock Paper Scissors with your pal. The loser needs to hold the backing plate inside the wheel well and securely attach with the two factory bolts and two flanged nuts; BAG PREP-**MN4**
- Repeat passenger side.

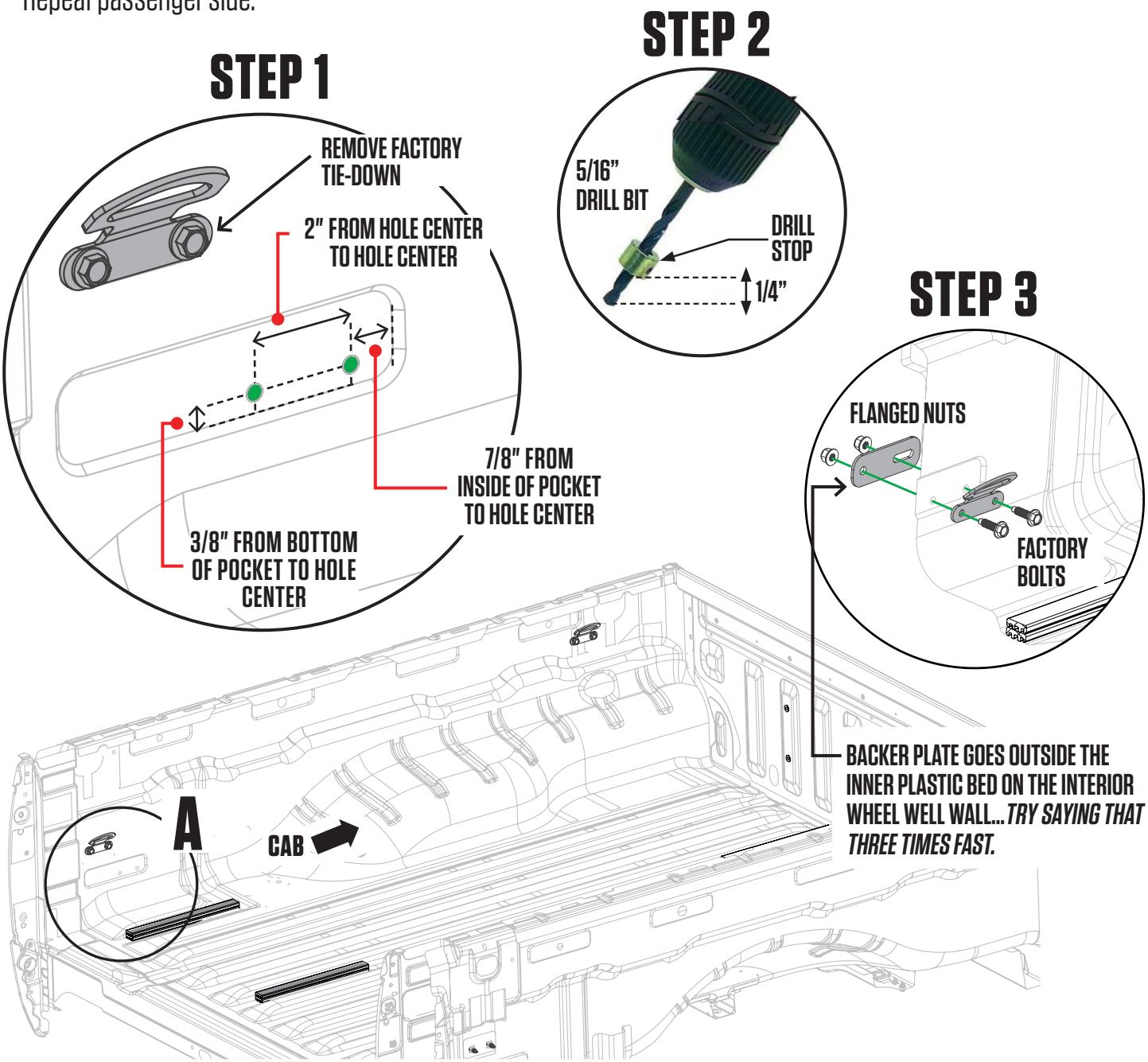

PREP BED: MARK CABSIDE HOLES

- Temporarily place cabside vert + center vert + stud assembly in truck bed.
- **DETAIL B:** Make sure centerline arrow on cabside vert is aligned with your centerline mark (blue).
- **DETAIL A, DETAIL C**: Mark the truck bed via the pre-drilled holes in cabside vert.
- Remove assembly from truck bed.

DETAIL A

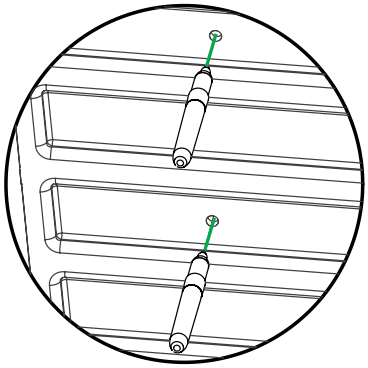

DETAIL B

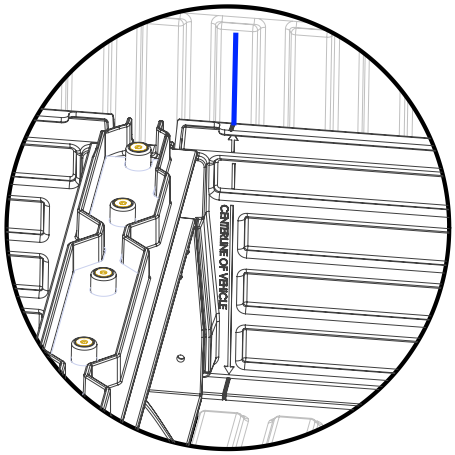

DETAIL C

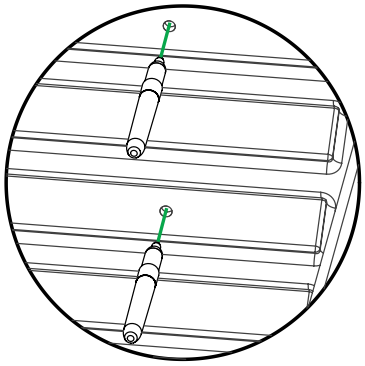

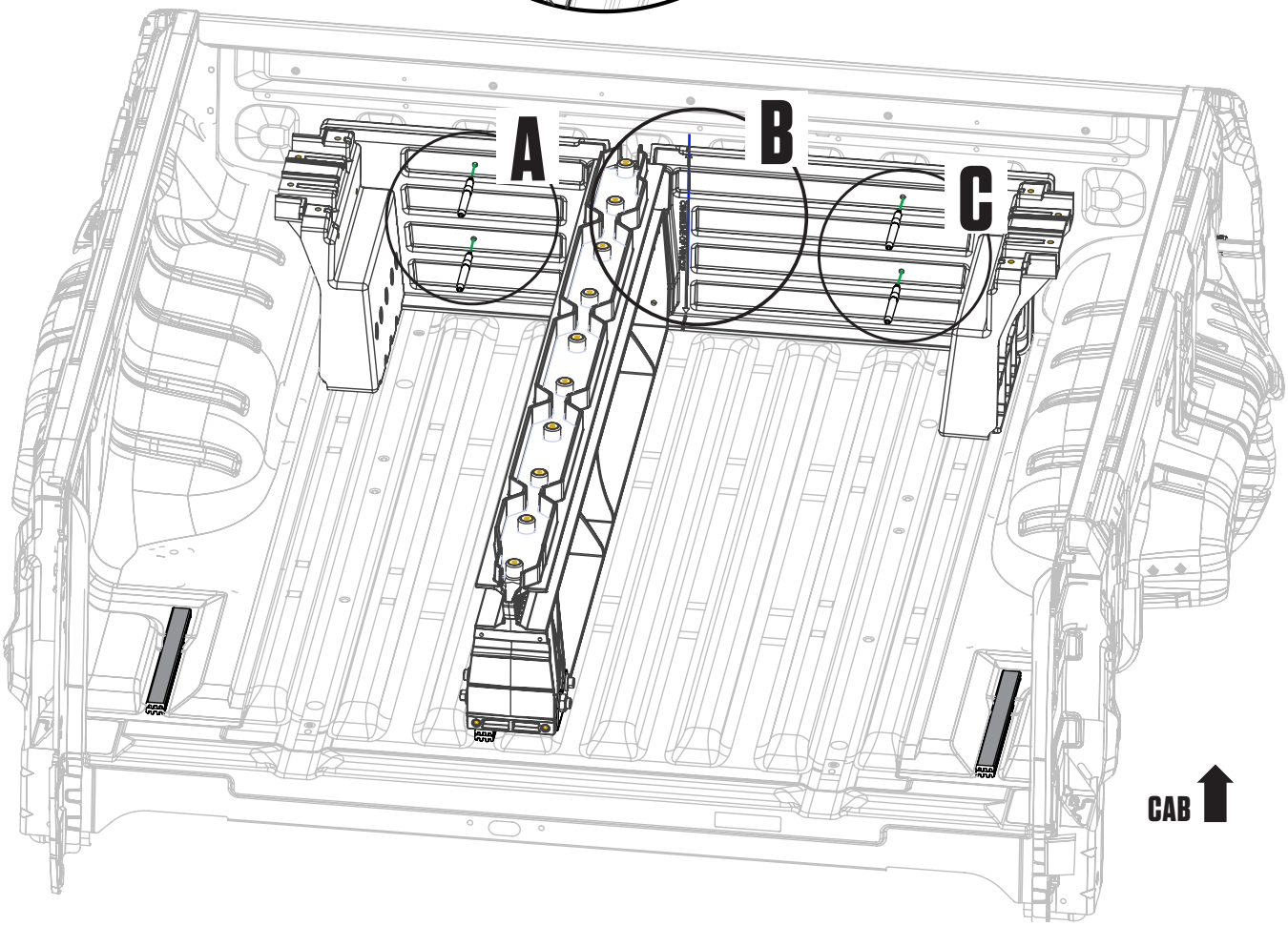

PREP BED: DRILL CABSIDE HOLES

- Drill four 7/16" holes at marked locations using a drill stop set to 1/4."
- **NOTE: To resist corrosion, seal the raw metal edges of the drilled holes with self-etching primer (available at most auto supply or hardware stores).**
- Install jacknut (yellow) onto jacknut wrench (orange) with 1" placement bolt; BAG PREP-**MN4.** **NOTE: Do not use the slightly shorter dogpoint bolts also found in your PREP BAG.**
- **DETAIL A:** Insert jacknut into hole. While holding jacknut wrench, tighten bolt with 3/8" socket until jacknut is fully crimped. Remove bolt.
- Repeat on the remaining three holes.

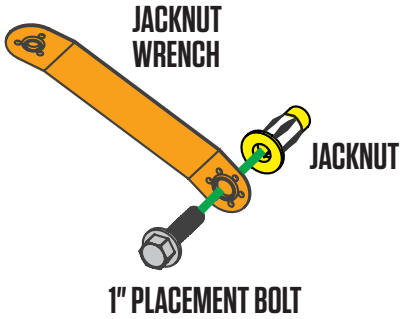

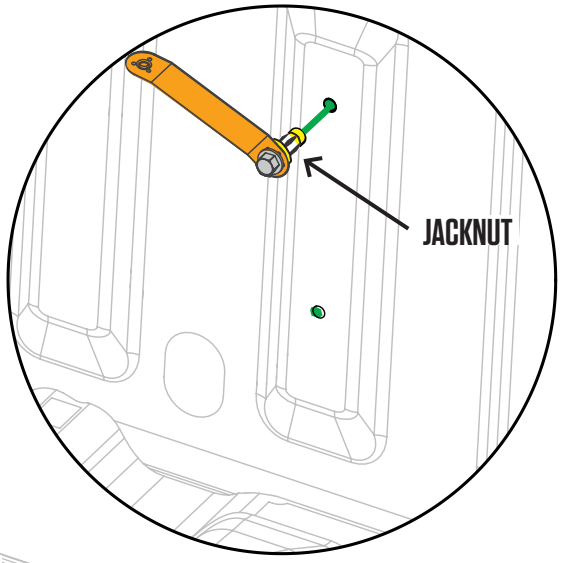

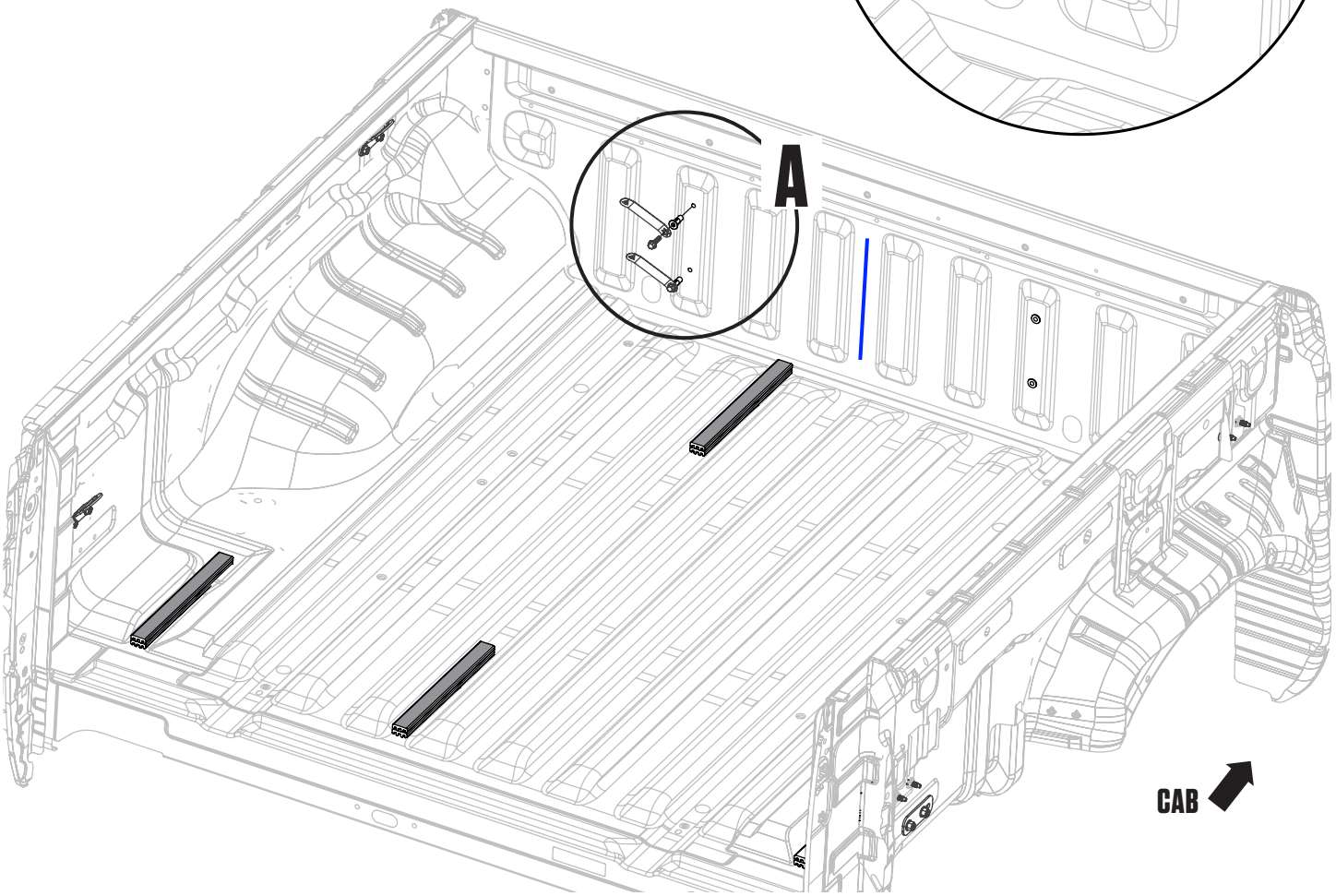

INSTALL: MOUNT ASSEMBLY

- Place cabside vert + center vert + stud assembly in truck bed.
- Secure assembly using two 9/10" dogpoint bolts and two washers; BAG PREP-**MN4.** **NOTE: These are the same bolts as the dogpoint bolts in your S1 BAG.**
- Repeat passenger side.

DETAIL A

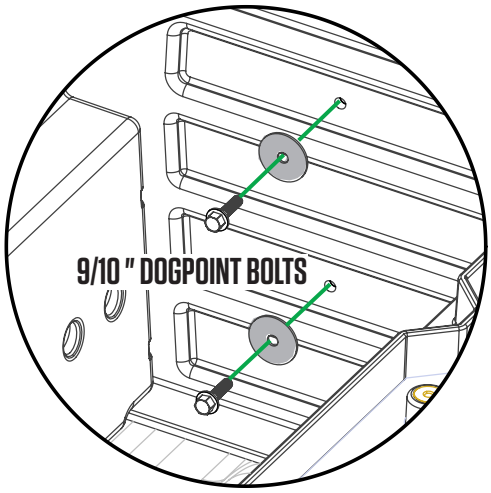

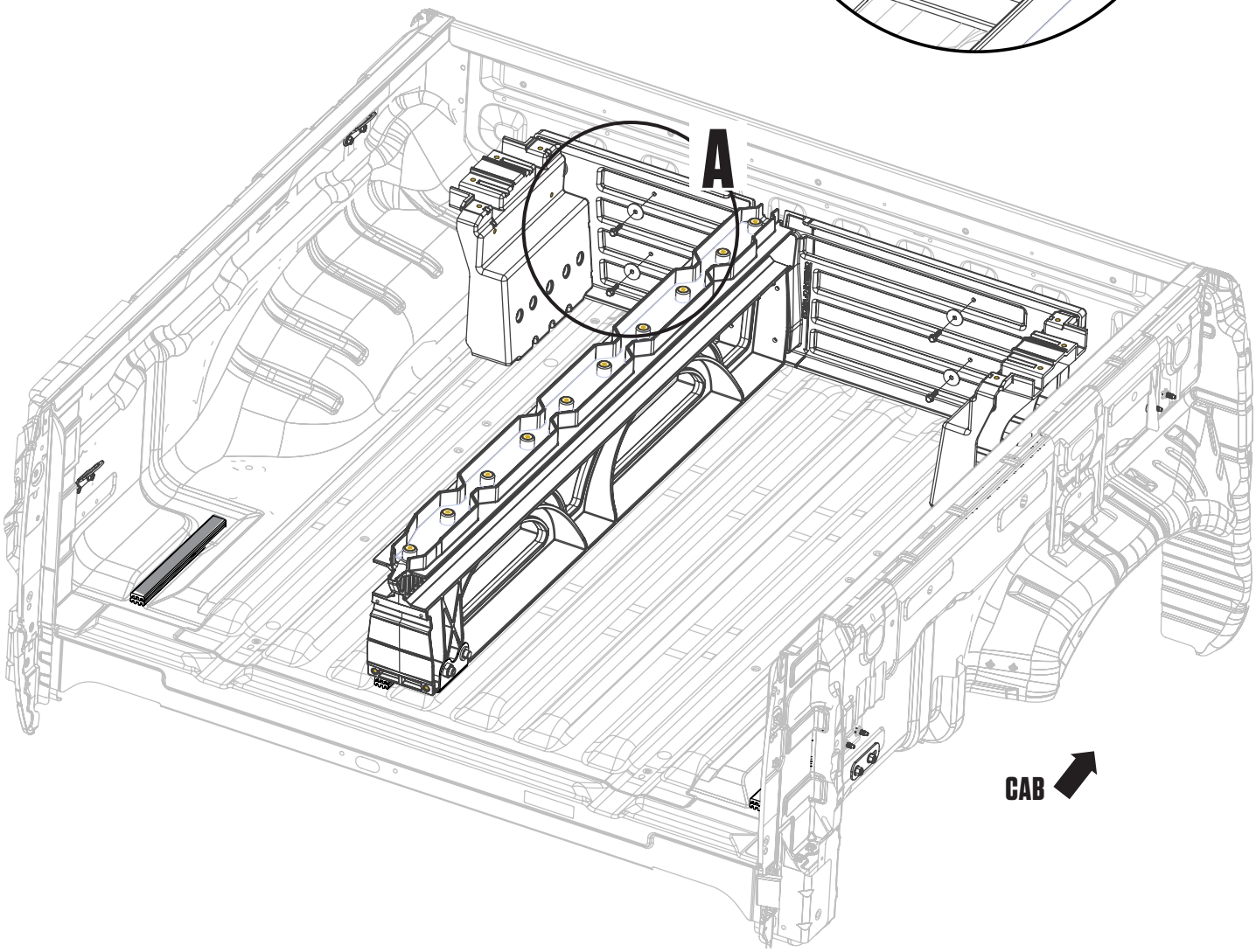

INSTALL: C-CHANNEL

- Loosely place driver side ammo can at tailgate corner of bed.
- Place driver side C-channel on ledge of stud and ammo can with end plate cabside.
- **DETAIL A:** Insert two bolts through C-channel into ammo can and **loosely** fasten with nut; BAG **S2,** BAG **N1.**
- **DETAIL B:** Tightly attach C-channel to stud; BAG **S1.**
- Repeat passenger side.

DETAIL A
KEEP LOOSE

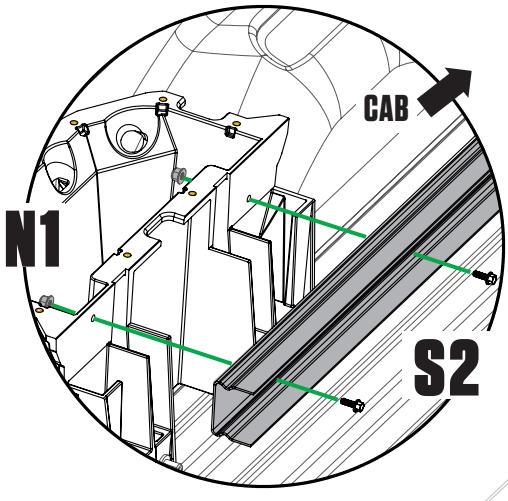

DETAIL B
TIGHTEN

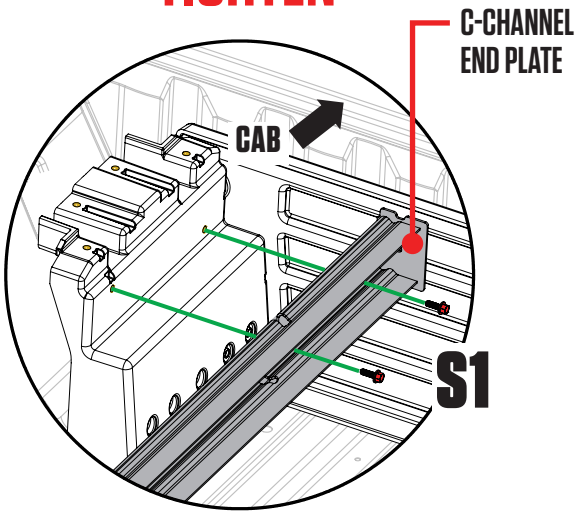

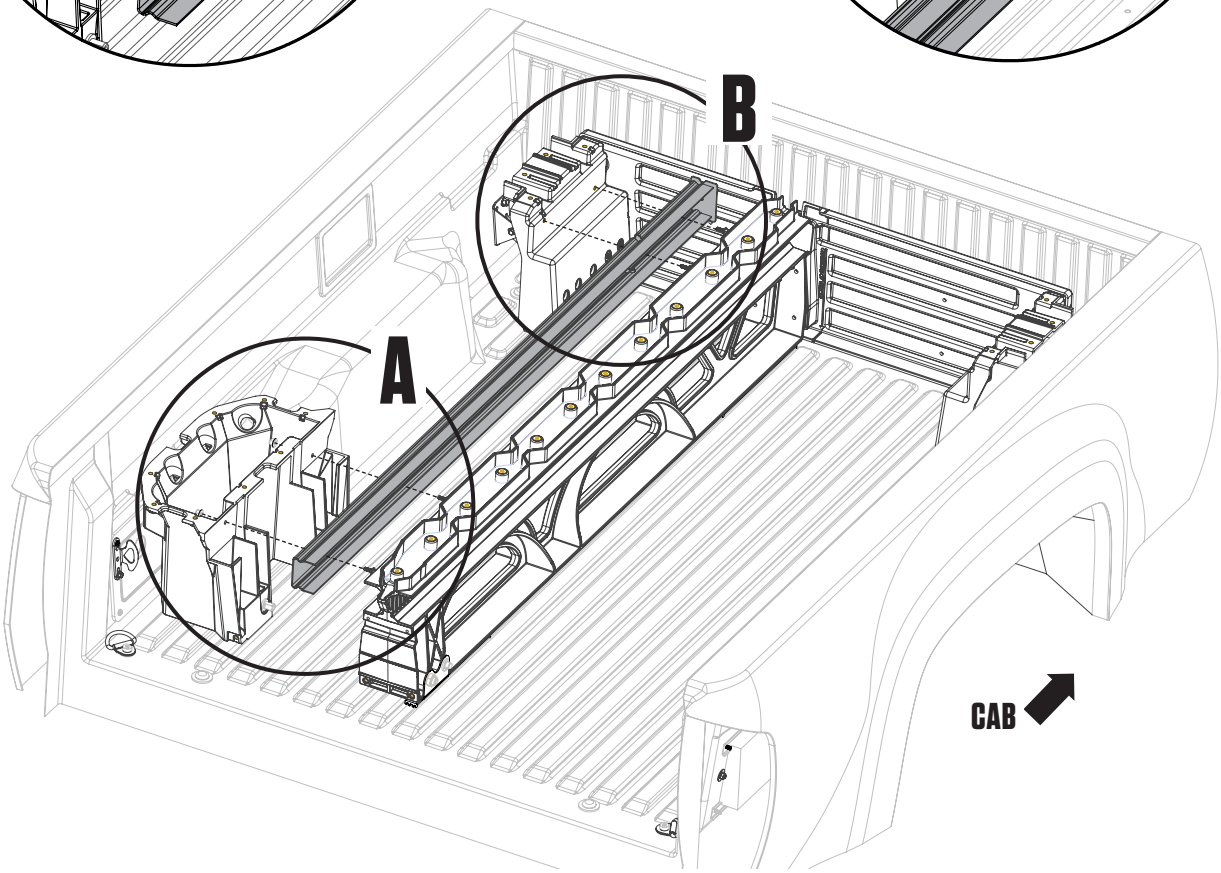

INSTALL: DECK HALVES

- Loosely place driver side deck panel on driver side stud, center vert and ammo can.
- Shift ammo can forward, rearward, L-R, as necessary to align with fully seated deck panel.
- Loosely assemble:
    - Six bolts (without O-rings) through deck panel into center vert; BAG **S1.**
    - Four bolts with O-rings through deck panel into stud; BAG **S1,** BAG **O-RINGS.**
    - Eight bolts with O-rings through deck panel into ammo can; BAG **S1,** BAG **O-RINGS.**
    - Tighten all S1 bolts.
    - **Securely tighten driver side C-Channel/ammo can nut and bolt.**
- Repeat passenger side **(make sure you don't forget to securely tighten passenger side C-Channel/ammo can nut and bolt).**

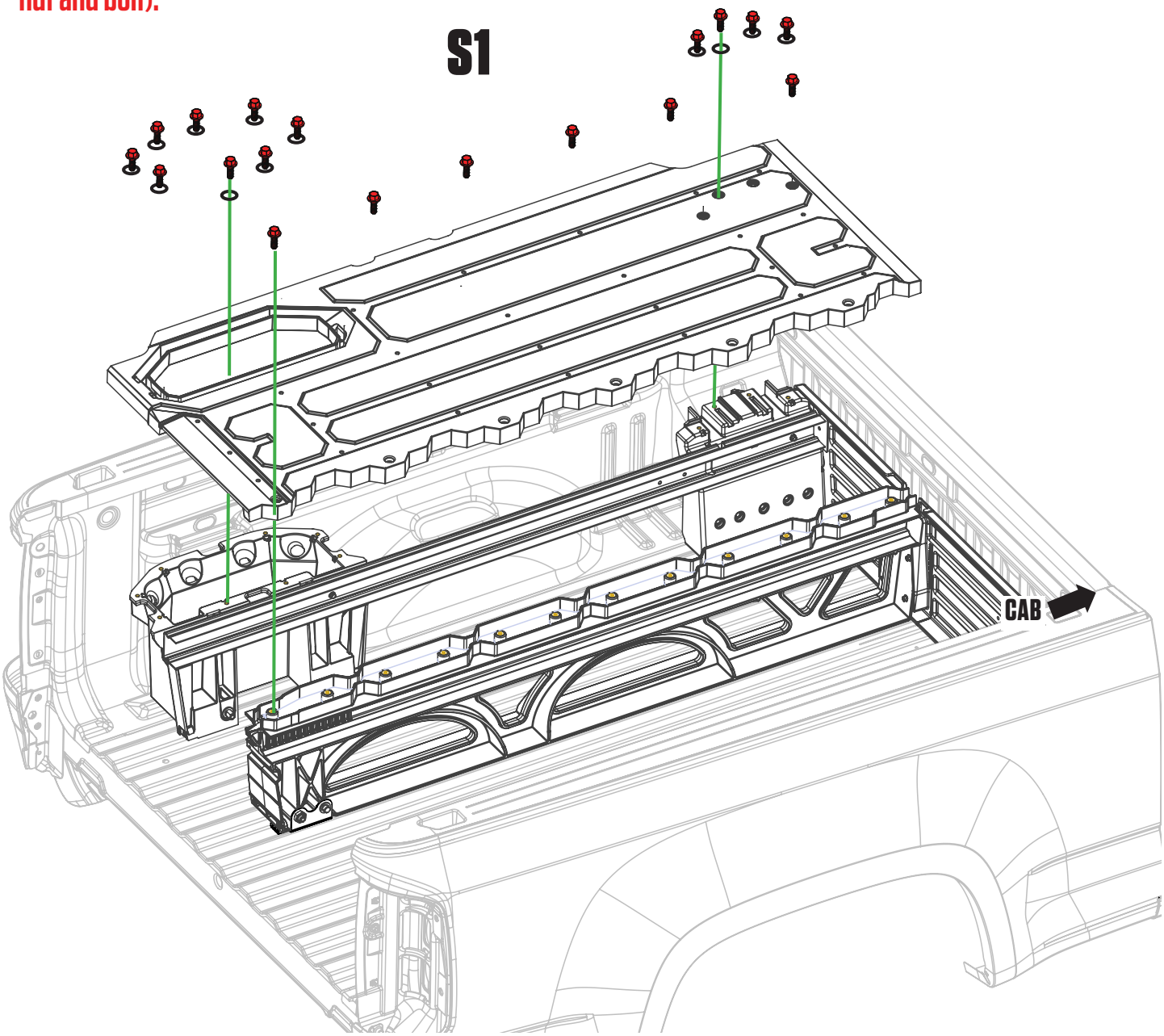

INSTALL: J-HOOKS

- **Loosely** assemble driver side J-hook assembly in order shown through second closest tailgate side hole in ammo can; BAG **J7.**
- Repeat passenger side.

DRIVER SIDE AMMO CAN

KEEP LOOSE

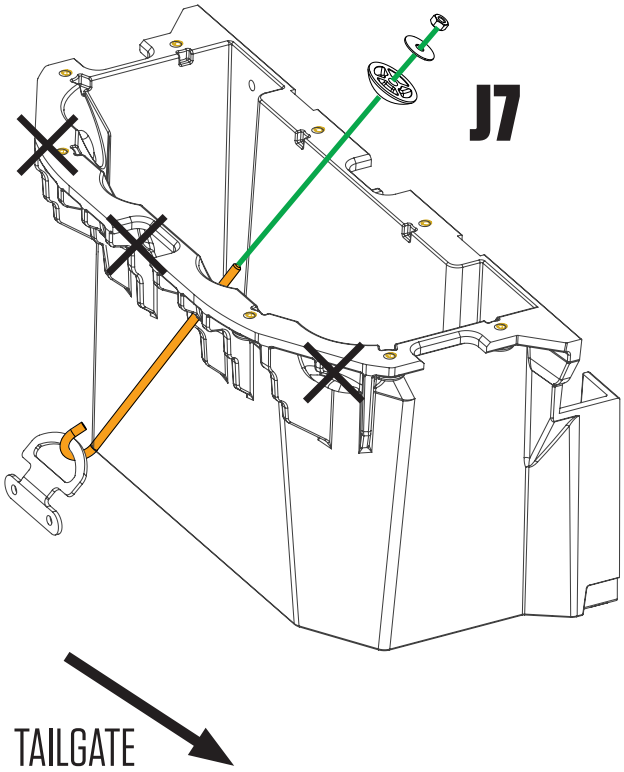

PASSENGER SIDE AMMO CAN

KEEP LOOSE

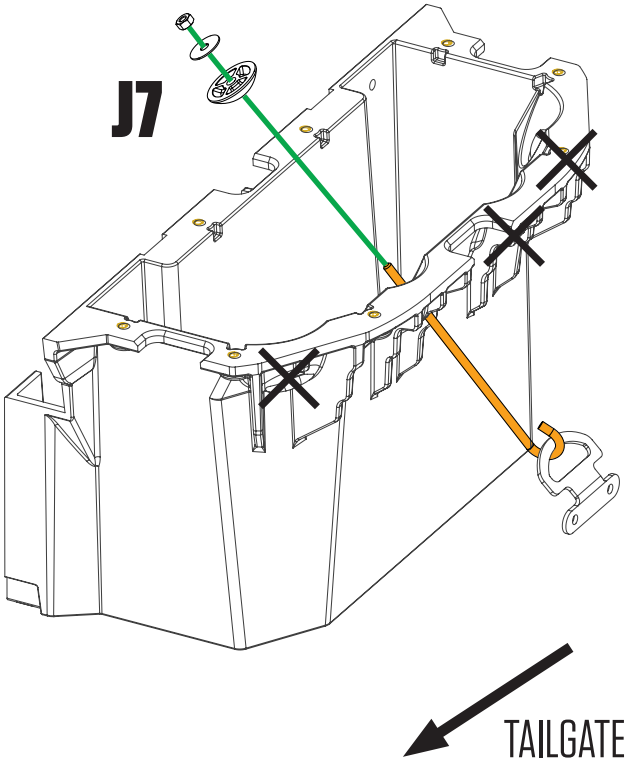

DRAWERS: BRACKETS + WHEELS

- Each drawer has a left and a right bracket. Bolt brackets into place via bottom two holes in bracket with 3/4" length bolts. Use the 2" length bolt for the upper cabside wall hole in bracket; BAG **DRAWER 1.**
- Install a tube brace in each drawer with two 3/4" length bolts; BAG **DRAWER 1,** BAG **DRAWER 2.**
- Attach wheels onto drawer brackets with a 7/32" hex wrench; BAG **WHEELS.**

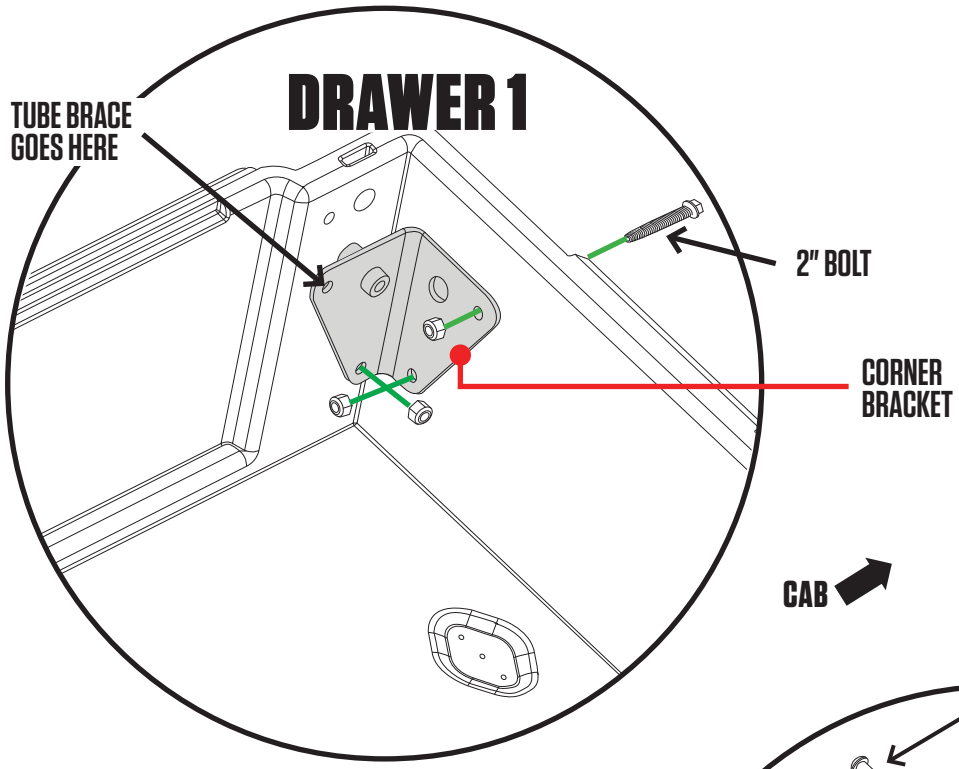

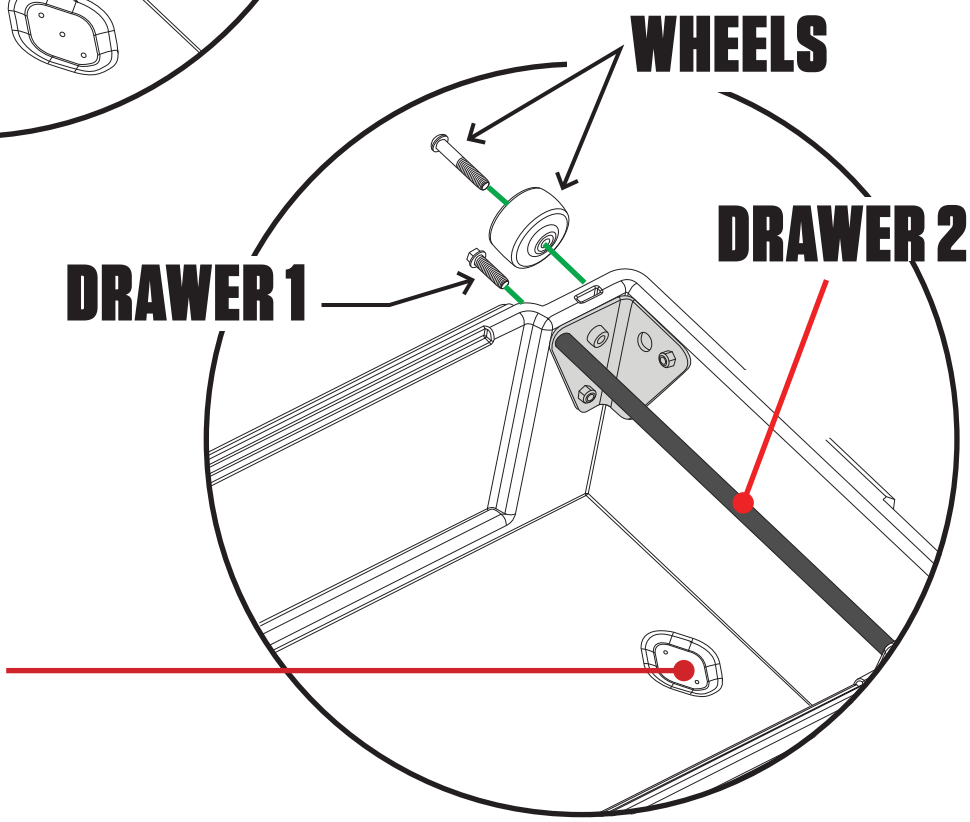

HELPFUL TIP: If you purchased drain plugs, install now (instructions are included with drain plugs).

DRAWERS: AXLE WHEELS + WEATHERSTRIPS

- Slide narrow drawer into driver side drawer cavity. **NOTE: It is easier to fully install narrow drawer first.**
- **DETAIL A:** Install two tailgate wheels onto narrow drawer axles with a 7/32" hex wrench; BAG **WHEELS.**
- Repeat with wide drawer.
- **DETAIL B:** Install weatherstrips on top of drawer edges ***WITH WIPER BLADE POINTING TOWARD DRIVER.***
  IMPORTANT: Facing the weatherstrip the wrong way will funnel water into drawer: DUH!

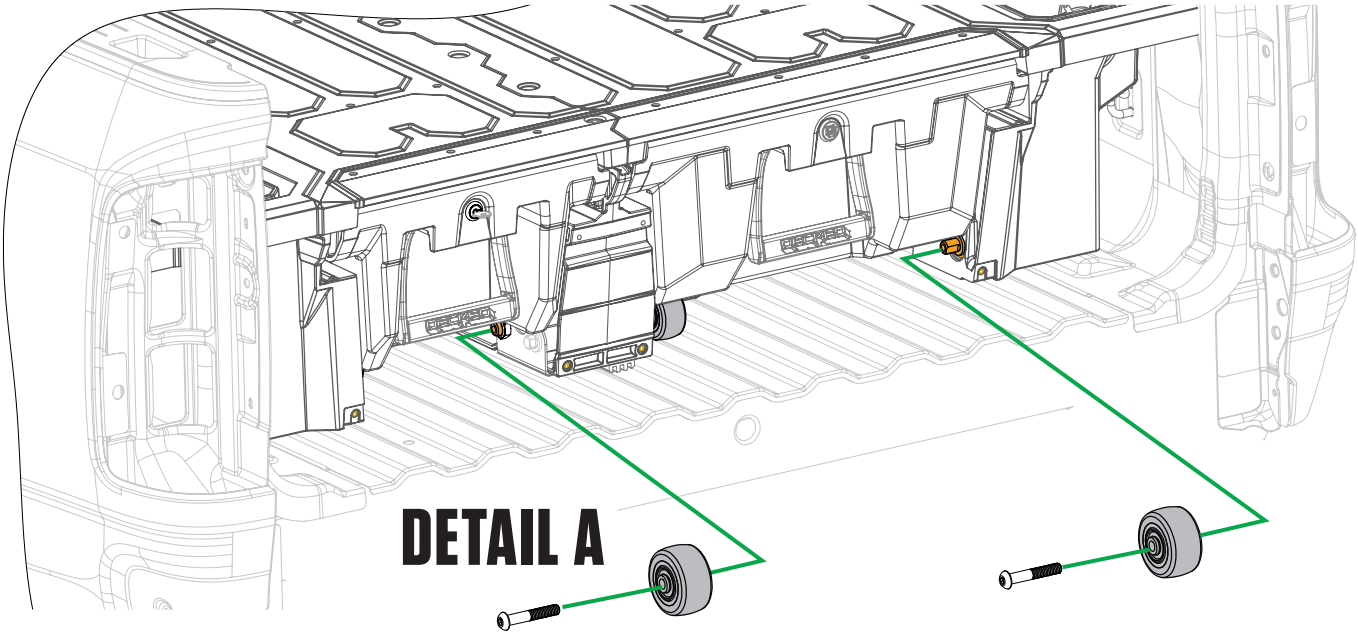

HELPFUL TIP: To make this step easier, jam a 2" piece of material under drawer, or get your pal to pinch the drawer up to the deck to give you better leverage.

HELPFUL TIP: Cut weatherstrips if they overhang.

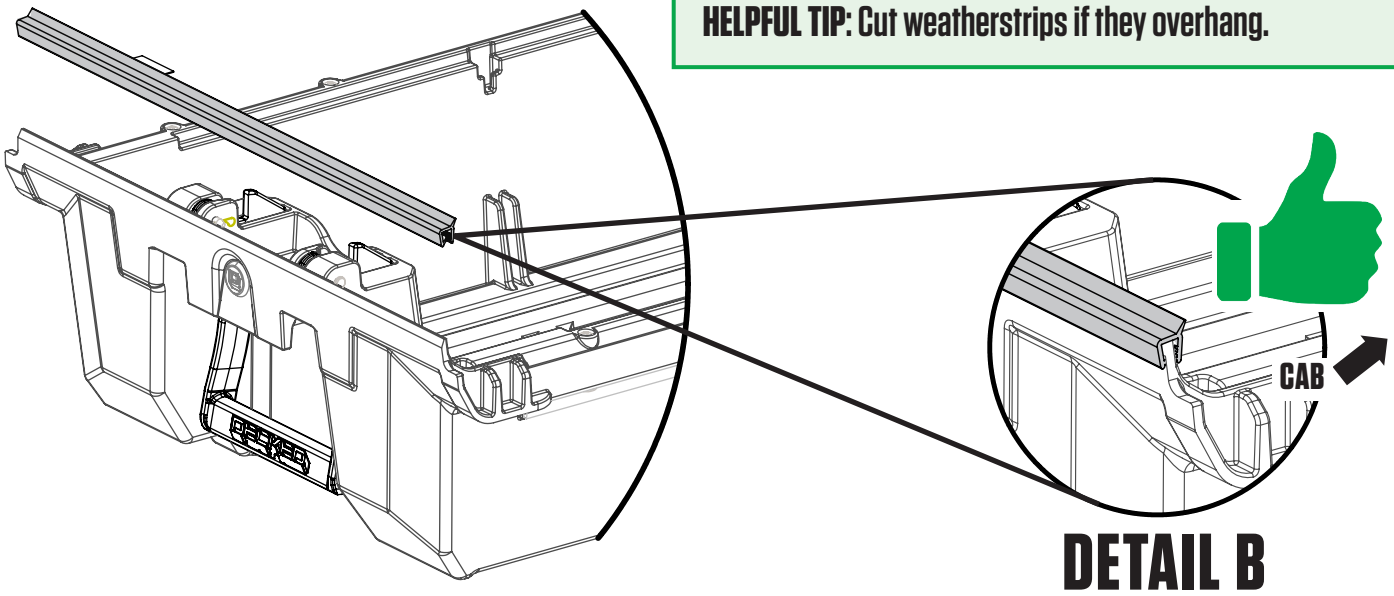

FINAL STEPS: TORSION BRACE + BOTTLE OPENER

- Slide torsion brace under center vert and tailgate ammo cans.
  NOTE: If you jumped the gun and tightened the J-hooks when installing, loosen them.
- Loosely install:
  - Two bolts with nylon washers through the end holes in torsion brace into ammo cans; BAG **S1.**
  - Two bolts with nylon washers through the bottom bottle opener holes and torsion brace into center vert; BAG **S1.**
  - Two 1/2" length bolts through upper holes in bottle opener into center vert; BAG **FINAL MID.**
- Align bottle opener to edges of center vert and tighten four bottle opener bolts.
- Tighten end bolts into tailgate ammo cans.
- **Finally.....Tighten the J-hooks! DO NOT OVER TIGHTEN, just make snug. Make sure the gap between the sidewall of the bed and the deck is equal on both sides.**

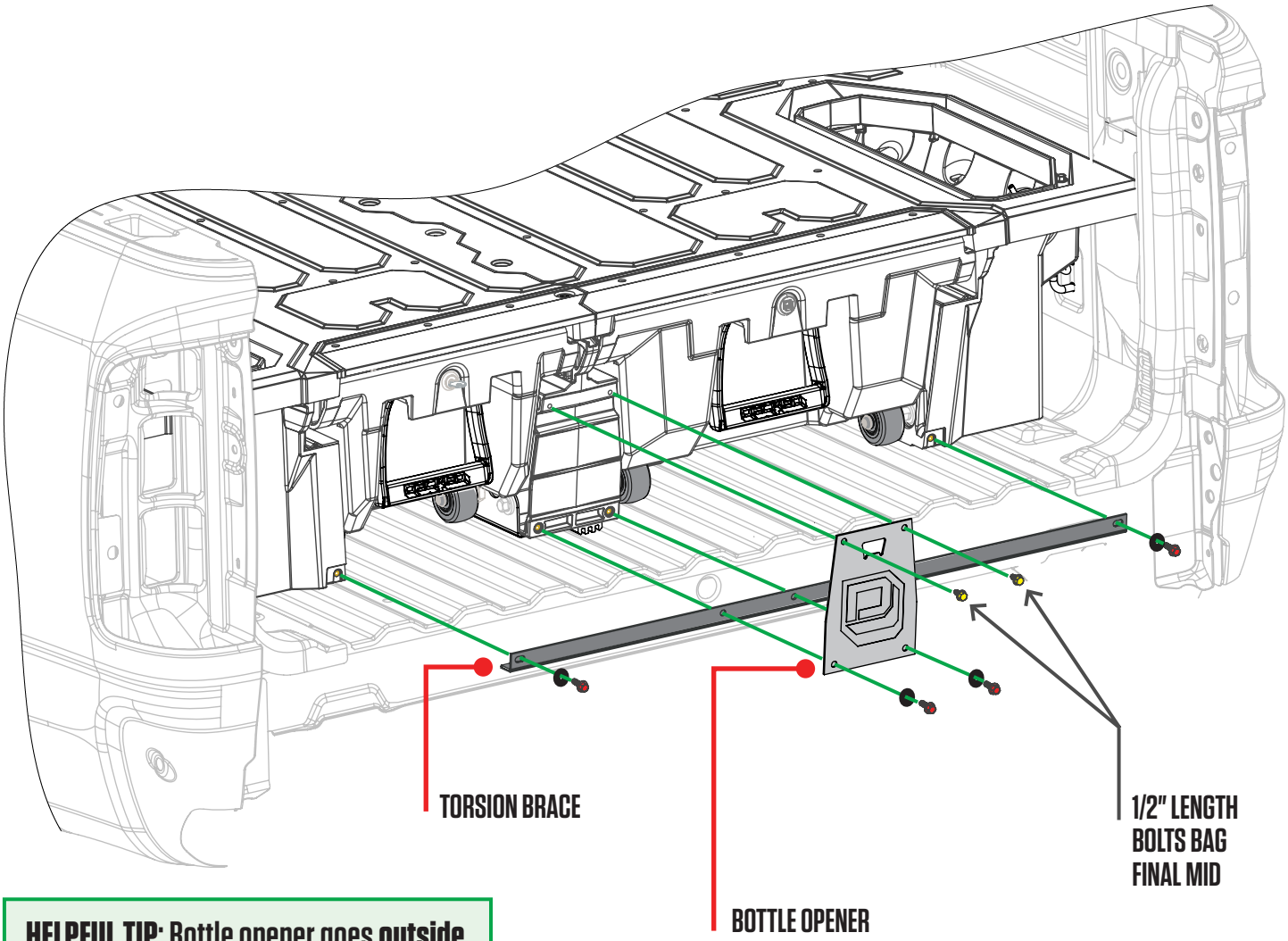

HELPFUL TIP: Bottle opener goes **outside** of torsion brace.

BAM BAM: THE RULER

- Center ruler in embossed area and screw three 1/2" length Phillips screws through the tailgate side holes directly into deck panels; BAG **FINAL MID.**

  NOTE: These are small gauge screws. Tighten to a light snuggle ONLY.
- For the three cabside ruler mounting holes, drill each with a 9/64" bit and a drill stop set to 1/2". There is a lateral steel tube that runs on the underside of the deck at this location. (SEE UNDERSIDE VIEW OF DECK).

  IMPORTANT: Only drill through TOP of steel tube; do not drill through bottom of tube, 'lest you want to pull a Niagara Falls and funnel water into your drawers.
- Screw three 3/4" length Phillips screws into the cabside ruler holes you just drilled; BAG **FINAL MID.**

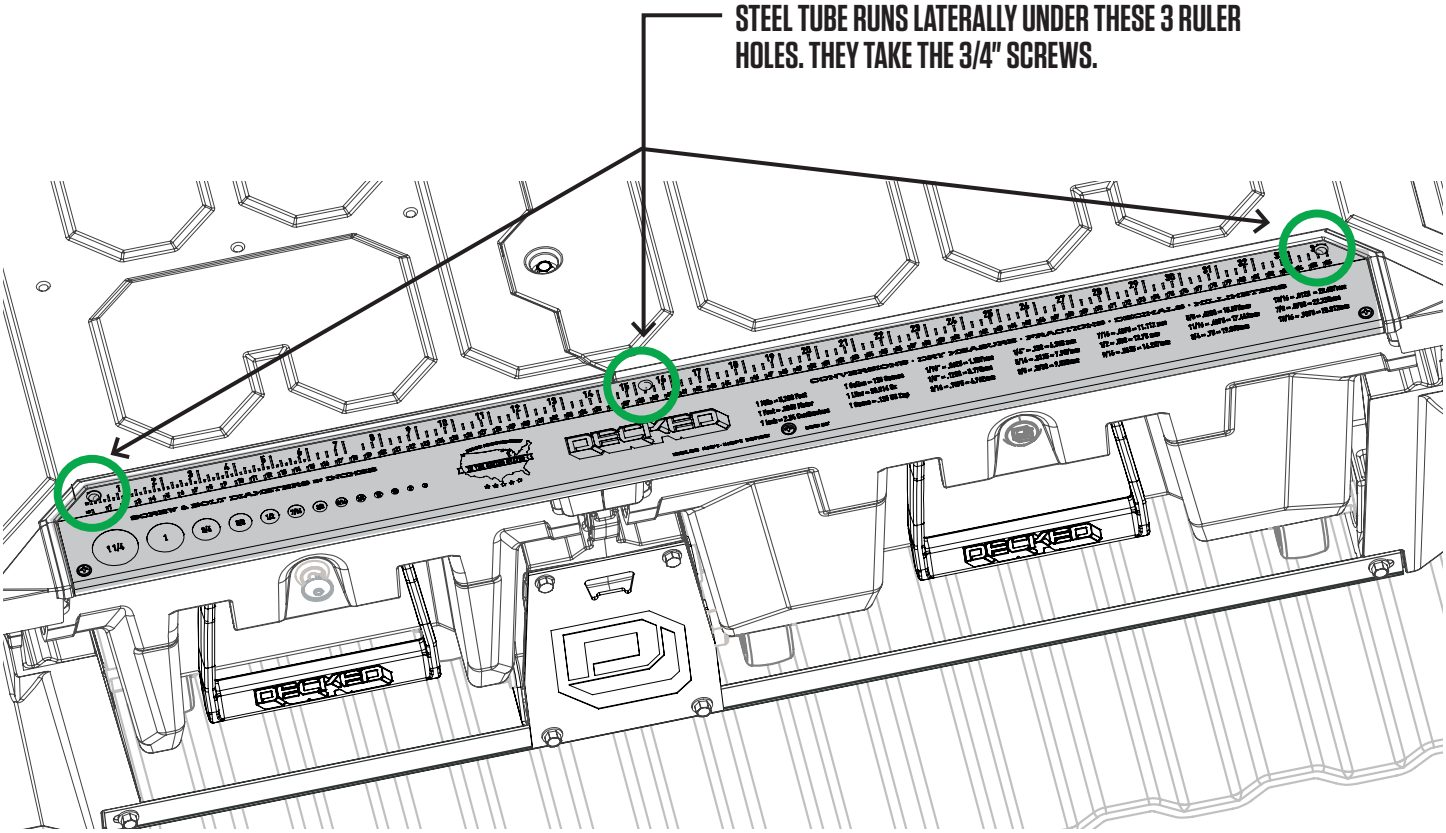

UNDERSIDE VIEW OF DECK

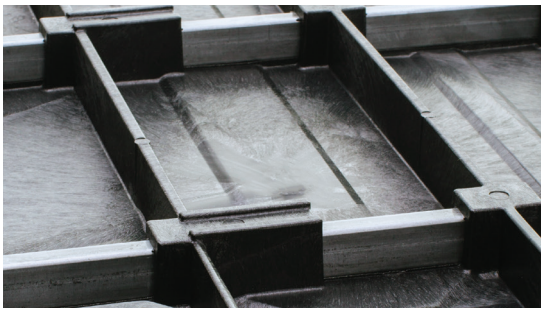

DO: Drill through the top of steel tube ONLY.

DO NOT: Drill through both sides of steel tube **= YOU'RE FIRED!**

FINAL STEPS: AMMO CAN LIDS

- **DETAIL A:** Ammo can lids are driver (marked L) and passenger (marked R) side specific.
- **DETAIL B:** Holding lid in orientation shown, insert tab on tailgate end of ammo can lid and push the cabside end of lid down to secure. Don't be afraid to give'r the Fonzi to close, it's rugged.
- Insert lock hole plugs, unless you ordered drawer locks! Install drawer locks now (instructions with locks); BAG **FINAL MID.**

IMPORTANT: Grab your favorite beverage, crack 'er open in the bottle opener and christen this ship! You did it. Immediately post a photo of your significant other, child or canine (in no order of significance) appreciating your accomplishment. Add hashtag #DECKEDUSA | @DECKEDUSA.

DETAIL A

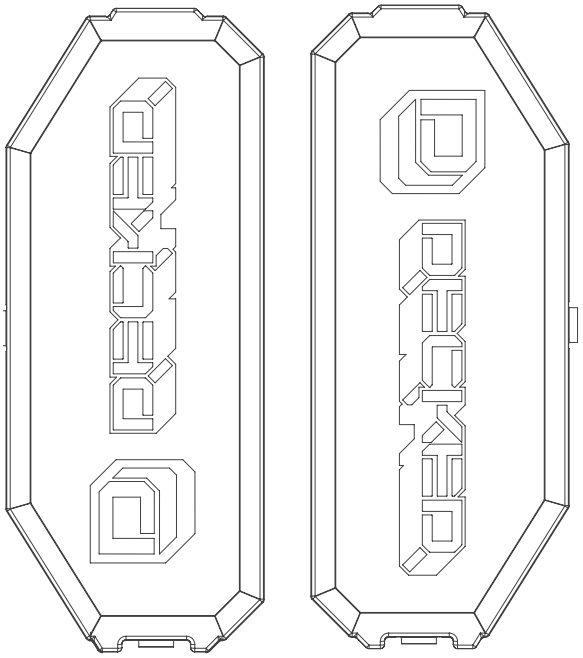

DRIVER SIDE AMMO CAN LID

PASSENGER SIDE AMMO CAN LID

DETAIL B

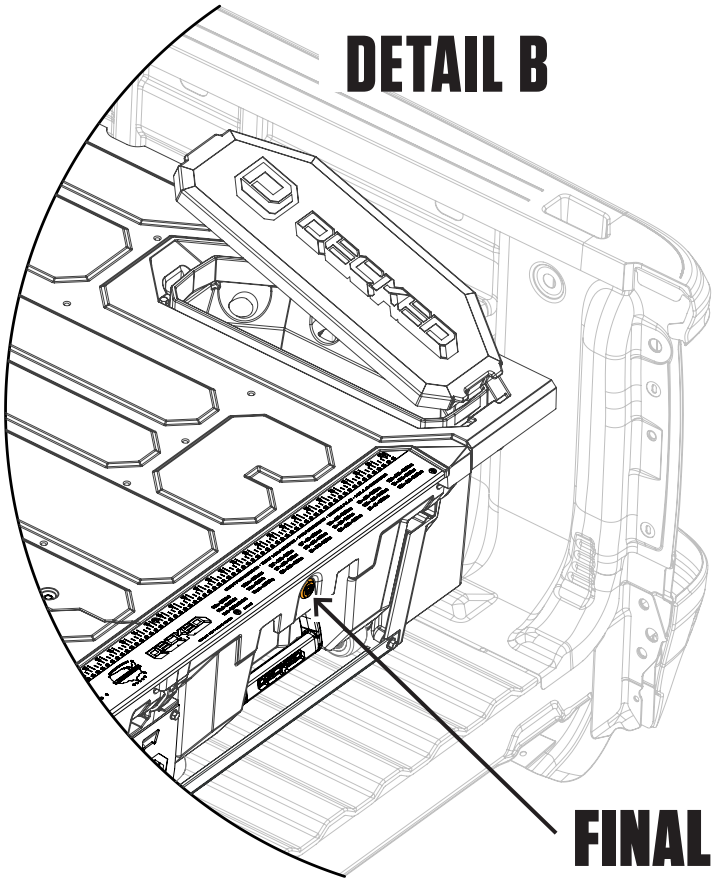

FINAL MID

#DECKEDUSA | @DECKEDUSA

DECKED 3-YEAR LIMITED WARRANTY (a.k.a LEGAL MUMBO JUMBO)

DECKED LLC warrants to the original purchaser of this product that the product will be free from manufacturing defects in workmanship and materials for a period of three (3) years from the date of the original purchase. If within three (3) years from the original date of purchase this product fails due to defect in materials or workmanship, DECKED LLC will replace any defective part at its option.

The original purchaser must contact the DECKED LLC customer service team and provide a description of the defective part, including digital pictures if requested, with the original purchase documentation as validation of warranty coverage or have previously activated their warranty online.

This warranty DOES NOT cover or apply to:

- Damage to the product due to misuse, mishandling and abuse.
- Products not used in accordance with the manufacturer's instructions or recommendations.
- Product not assembled or installed according to manufacturer's instructions.
- Normal wear and tear.
- Undeclared damage to the system during shipping, acts of God. In addition, consequential damage and incidental damages (including lost time) such as damage to persons or property are not covered under this warranty.

REGISTER YOUR PRODUCT FOR ANY FUTURE WARRANTY NEEDS AS WELL AS TO BE INFORMED OF PRODUCT IMPROVEMENTS, ISSUES OR SOLUTIONS SPECIFIC TO YOUR MODEL **DECKED.COM/REGISTER**