INSTALLATION SHEET

SOLID FOLD 2.0 UTV Bed Cover

extang truck bed covers

Applications:
2013 - 2018 Polaris Rangers
bed dimensions: 36.5" x 54" x 11.5"

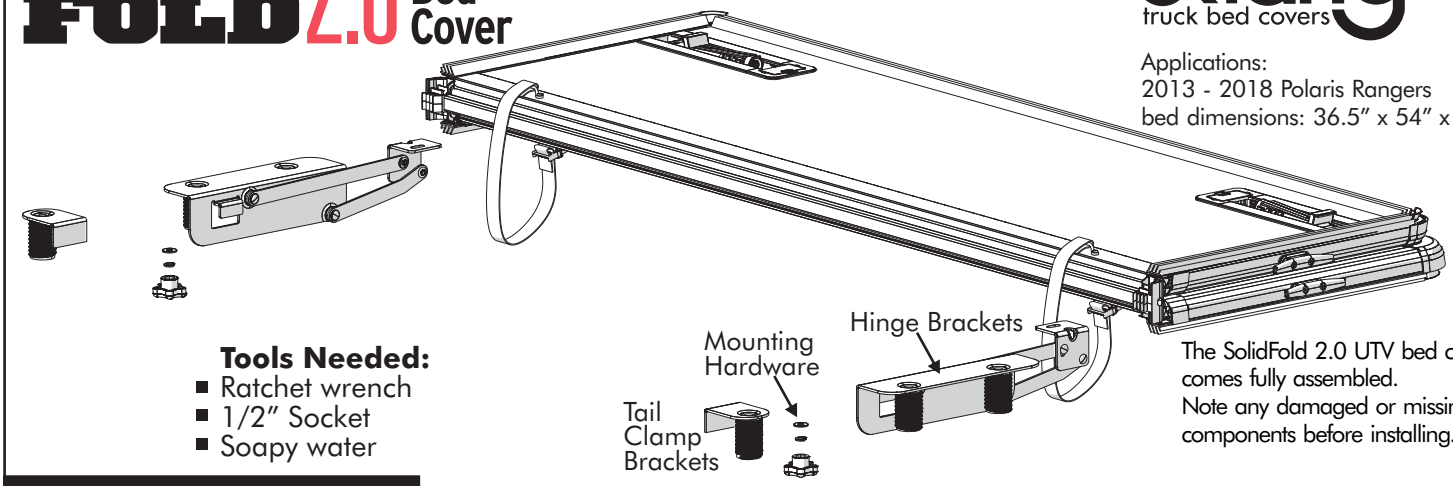

Tools Needed:
- Ratchet wrench
- 1/2" Socket
- Soapy water

The SolidFold 2.0 UTV bed cover comes fully assembled.
Note any damaged or missing components before installing.

1

It is important that all areas where the bed cover mounts are clean and free of debris prior to installing.

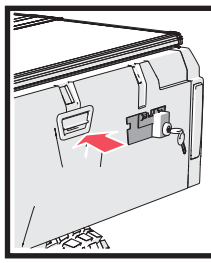

Optional Pop & Lock lock mechanism. Refer to the supplemental sheet for instructions and use.

MISSING PARTS???
call Extang at
1-800-877-2588
Any required parts will be shipped to you directly.
(DO NOT return whole kit to store)

2

Insert the hinge bracket into the 2nd and 3rd bed wall holes, facing toward the cab as shown.

Insert the tail clamp bracket into the last bed wall hole, as shown.

Both sides.

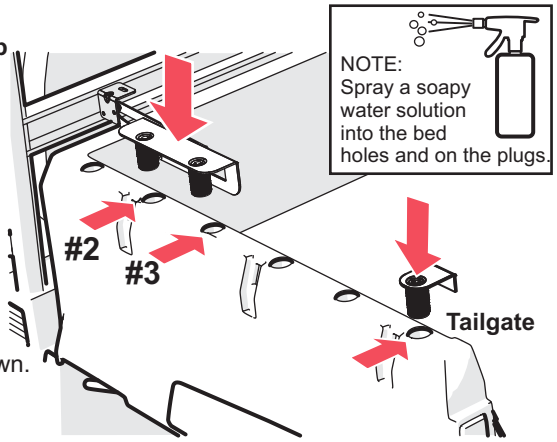

3

Tighten the six bracket nuts with a 1/2" socket, each to 7 ft-lb 9 Nm.

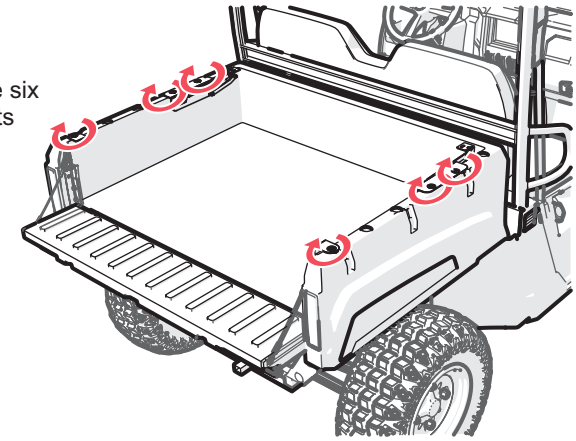

4

Place the folded cover assembly onto the front / cab end of the bed.

Note the positioning of the mounting hardware in the next step- 5.

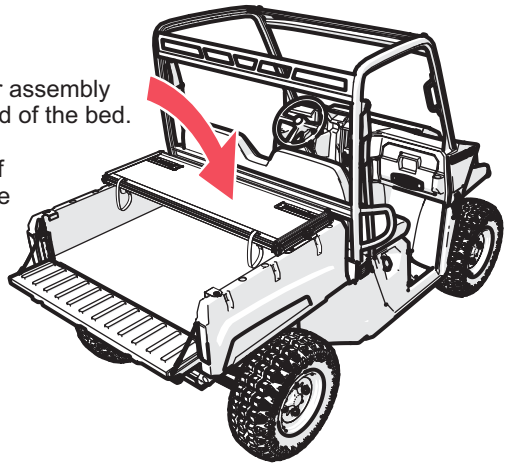

5

The threaded bolt included with the cover assembly should be inserted into the forward hinge bracket as shown, one on each side.

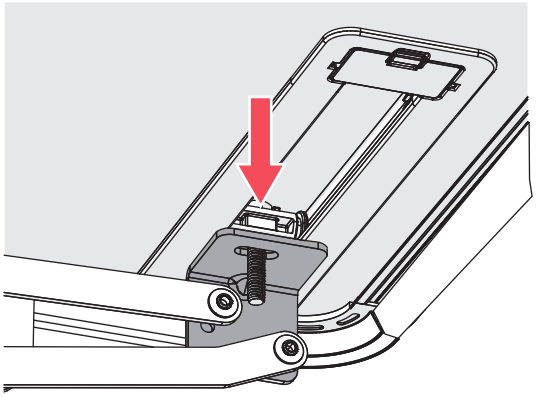

Extang Corporation
5400 S. State Road
Ann Arbor, MI 48108
734-677-0444, Fax: 734-677-8409

3 1 8 3 0 0 3 0 - 3 0

TRUCK HERO company

Item No. 31830030-30 7.18 DD
© Extang, Corp., 2018. Printed in USA

6

Install the cover mounting hardware on both sides.

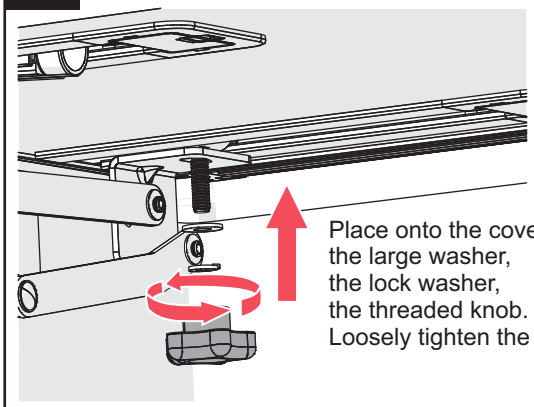

Place onto the cover threaded bolt
the large washer,
the lock washer,
the threaded knob.
Loosely tighten the knob.

7

Close the cover and the tailgate.
Align the bed cover so that it is square with the vehicle bed and that it is centered front to back and side to side.

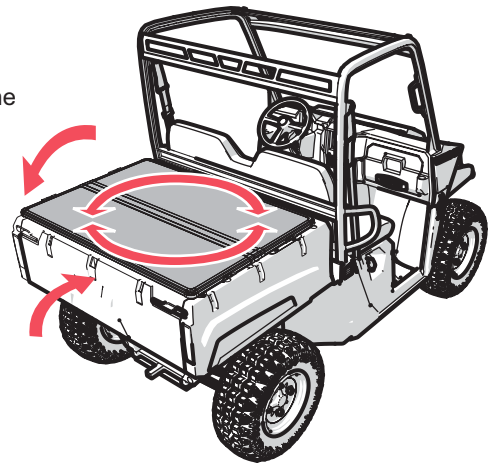

8

With the bed cover aligned with the vehicle bed, carefully open the cover without disturbing the alignment.

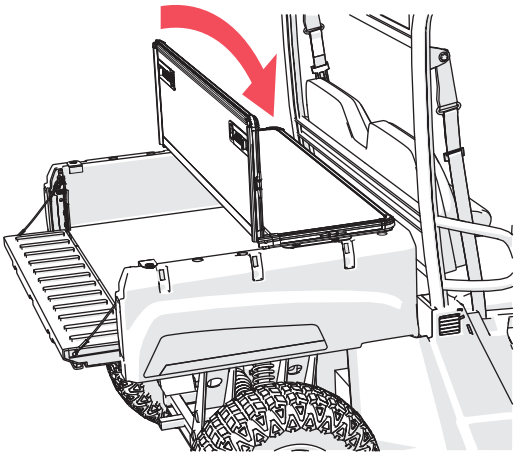

Firmly tighten both mounting knobs..

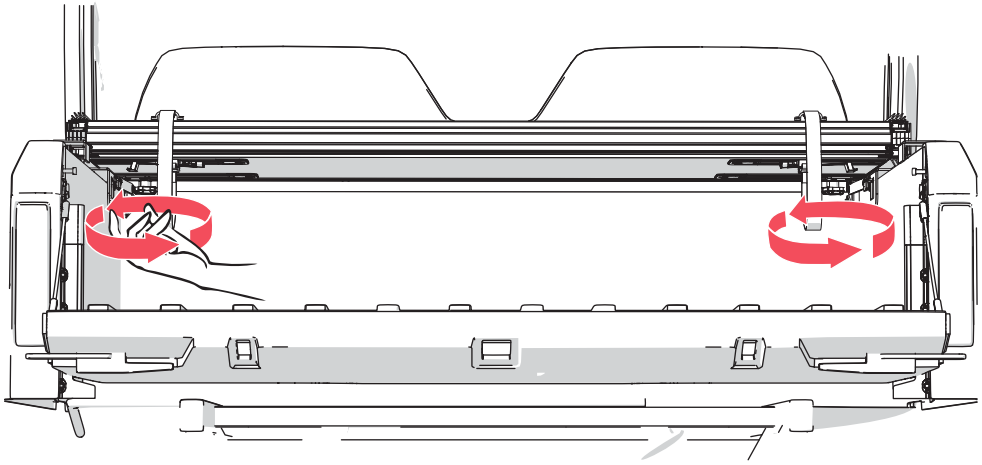

IMPORTANT
Re-tighten the front / cab knobs after every use.

9

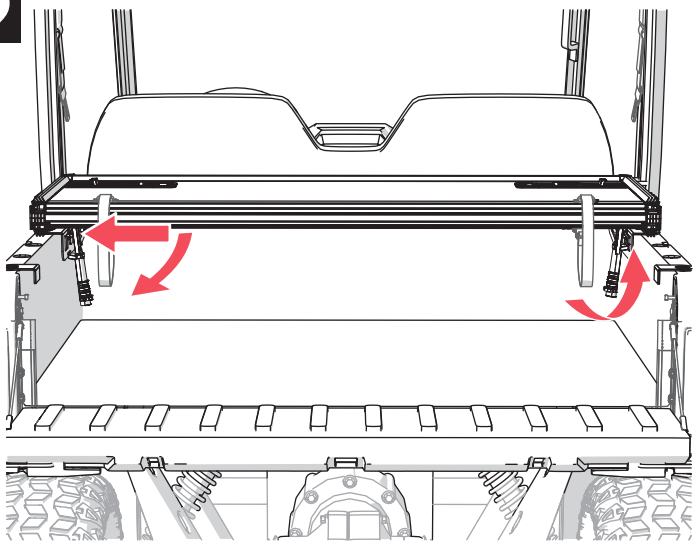

Rotate the middle clamps down from their stowed positions.
Slide the clamps out toward the vehicle bed.
Pull down on the clamps and swing them under the lip of the hinge bracket flanges.

10

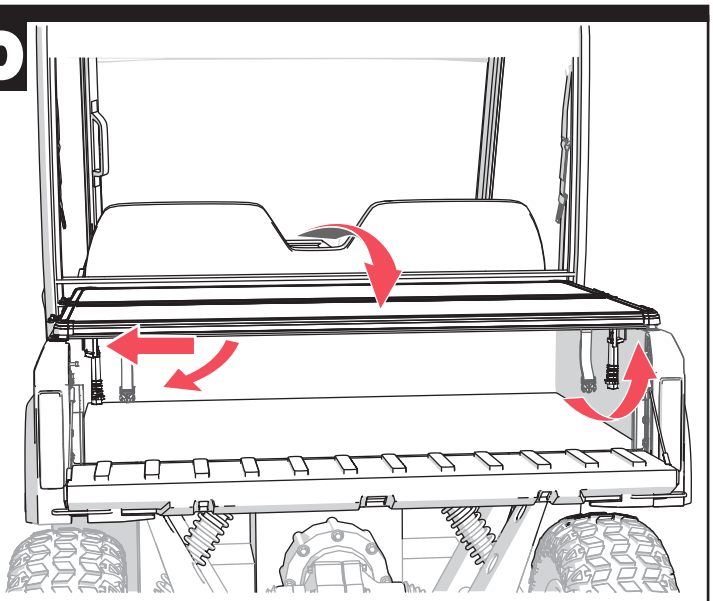

Fully close the cover. Rotate the tail clamps down from their stowed positions. Slide the clamps out toward the vehicle bed.
Pull down on the clamps and swing them under the lip of the tail bracket flanges.

11

To stow the bed cover in the open position, make sure the middle clamps are latched and secure. Snap both cab tie down straps into the front cover clasps.

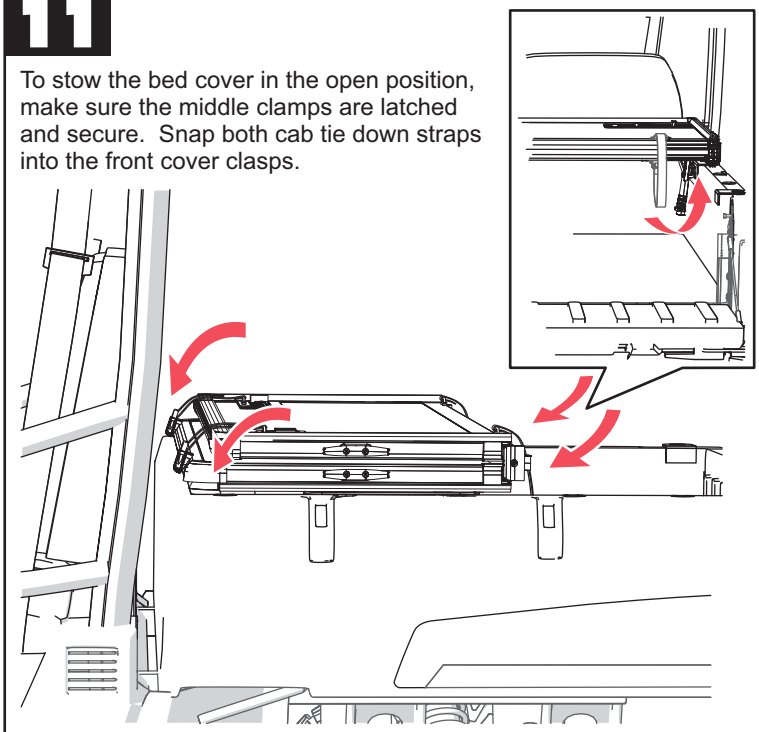

12

To stow the bed cover in the fully open and upright position, detach and stow the middle clamps into their pockets. Raise the cover to vertical. Use the roll bar straps to wrap tightly around the roll bar. Snap the strap back into the cover clasp. Tighten the straps.

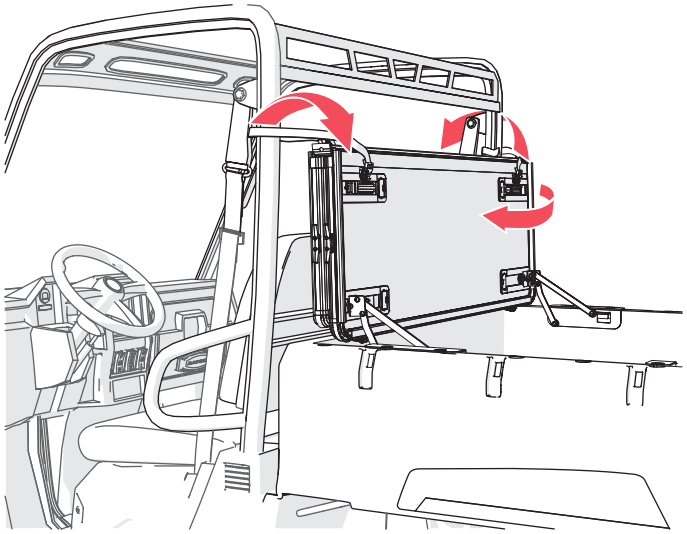

13*

Install the seal by hooking one side, then clipping the other side over the edge.

For XP1000 models remove the installed tail seal, and replace with the 32000120 seal.

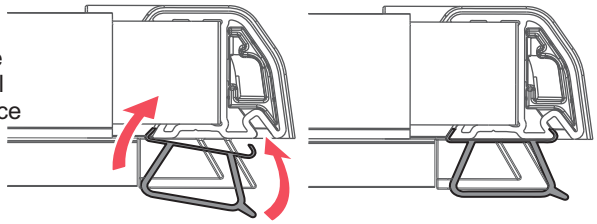

Replacement Parts

NOTE: To order replacement parts, contact the Customer Service Department for assistance at 800-877-2588. When ordering, xxx represents the 3-digit suffix, as referenced on the sales receipt or vehicle application list. An asterisk, *, requires more information such as the year, make, model, bed size or driver / passenger side.

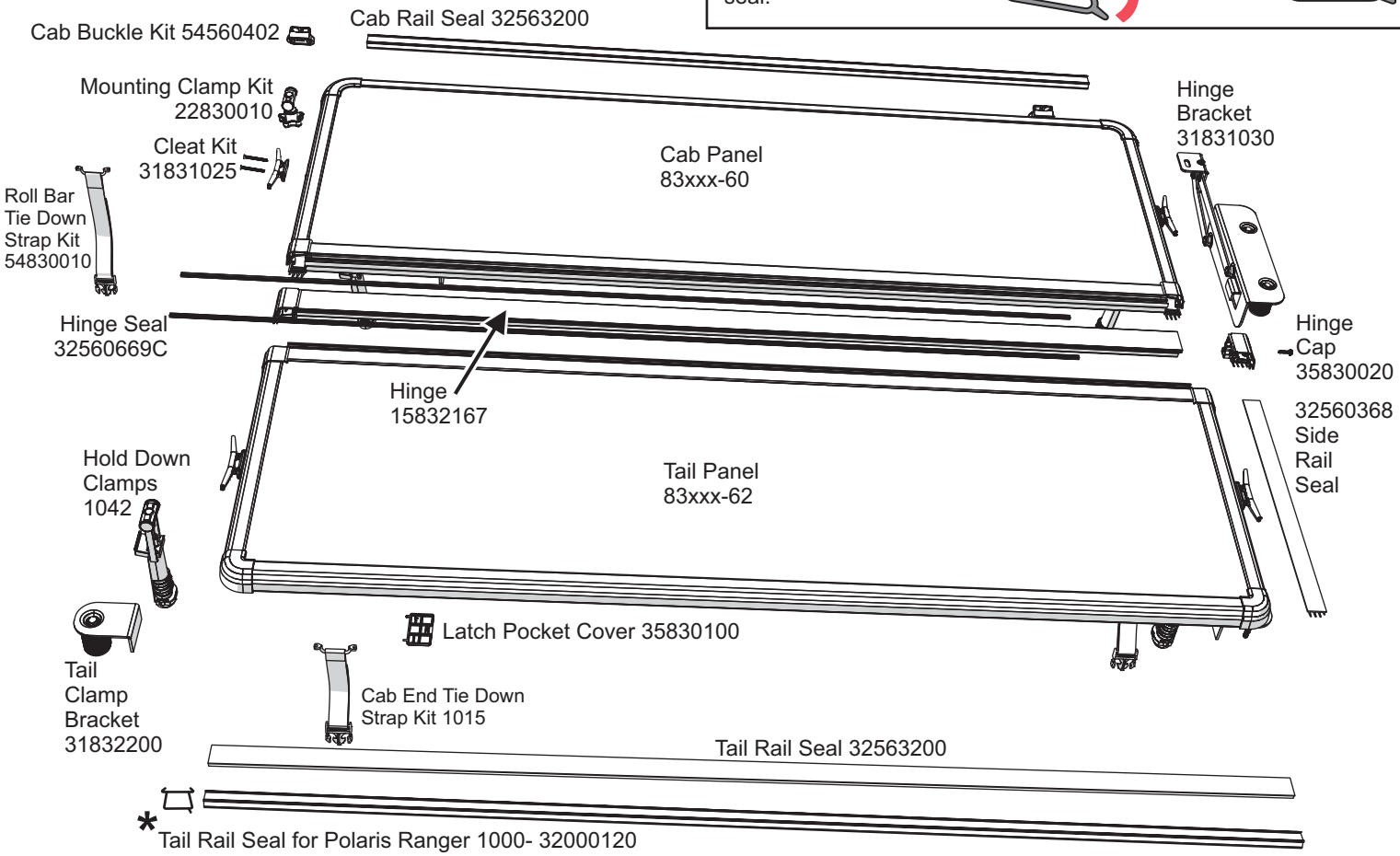

MAXIMUM STRENGTH WARRANTY

EXTANG LIMITED WARRANTY

WARRANTY DURATION

Extang offers 90 days of coverage from the date of purchase. Warranty is limited to original purchaser of bed cover and is nontransferable.

WARRANTY CONDITIONS

This warranty is against defective materials and workmanship. The warranty is void if the product has been damaged by accident, unreasonable use, neglect, improper service/installation/removal, modifications, normal wear and tear or other causes not arising out of defective materials or workmanship. Consequential and incidental damages are not covered under this warranty.

WARRANTY EXCLUSION

- Warranty is void if defect in materials and workmanship is not reported in writing within 90 days purchse.
- Warranty does not cover the cost of shipping, including the cost of returning the product for warranty service or inspection.
- Warranty does not cover scratches and dents to bed cover. Nor is damage covered from weight exceeding the noted maximum, or if it is not evenly distributed.
- Warranty will be void if shipping damage is not reported in writing within 3 business days of purchase.

THE FOLLOWING CONDITIONS WILL ALSO VOID THE WARRANTY

- DRIVING WITH PANELS OPEN OR IMPROPERLY SECURED – Prior to vehicle operation, clamps must be tightly secured so that clamp lip tightly grips the inner side of installation brackets.
- OPEN POSITION: tonneau must be completely folded and secured with BOTH buckles and front panel clamps secured. With all panels secured vehicle may be driven at full speed. Two Panels Position Open- tonneau must be secured with both buckles around the roll cage. Do not drive more than 10 mph with cover in the Two Panel Open position.
- CLOSED POSITION: Tonneau must be completely flat and secured at all 4 clamps.
- Top of tonneau MUST be free of foreign material including snow and ice before opening panels or severe damage may result.
- Do NOT tow or trailer the UTV with tonneau cover installed on the UTV.
- Load and weight limits: Max weight for the top of the cover is 250 lbs evenly distributed, do not put a large source of weight on the cover if not evenly distributed.
- Only use rubber bungee or standard bungee cords for attachment to tie down cleats

DO NOT use ratchet straps for attachment to tie down cleats

PERFORMANCE

Provided all warranty conditions are met Extang, will either repair or replace (at Extang's option) the product or component. Extang may require the original item to be returned postage prepaid for final determination. Extang reserves the right to substitute and offer the respective warranty discount on an entire replacement system or provide other remedies than those listed in this warranty for discontinued product or other reasons. A return authorization number must be obtained from our customer service department prior to returning any product. Shipping charges will apply for any repair or replacement. This warranty gives you specific legal rights and you may also have other legal rights which vary from state to state.

WARRANTY CONTACT

Please refer to the parts diagram and contact Extang Customer Service at 800-877-2588 or warranty@extang.com to have a specialist assist you with the correct part for your Extang bed cover and for warranty service.