TORLC2

TOYOTA

Rear suspension package
Ensemble pour suspension arrière
Ensemble para suspensión de trasero

INSTALLATION INSTRUCTIONS

a) Raise vehicle allowing the axle to hang freely.
b) Remove existing bump stop assembly & retain fasteners.
c) Assemble Aeon rubber spring and bracket as shown in the adjacent diagram.
d) Mount Timbren assembly using OEM fasteners.
e) Lower vehicle.

NOTES:
When removing OEM fasteners, use penetrating fluid.

Do not exceed vehicle manufacturer's recommended axle weight rating. Check for AEON® interference with vehicle components - Under load AEON® will "expand" in diameter.

INSTRUCTIONS DE MONTAGE

a) Soulever le véhicule de sorte que l'essieu soit dégagé.
b) Retirer l'assemblage de la butée de suspension existante et conserver la boulonnerie.
c) Assembler le ressort en caoutchouc Aeon et le support comme il est indiqué dans le schéma adjacent.
d) Monter l'assemblage Timbren en utilisant la boulonnerie du fabricant d'équipement.
e) Redescendre le véhicule.

REMARQUES:
Utiliser un fluide pénétrant, au moment de retirer la boulonnerie du fabricant d'équipement.

Ne pas dépasser le poids nominal sur l'essieu recommandé par le fabricant du véhicule. Vérifier que le ressort AEON® n'a pas d'incidence sur d'autres pièces du véhicle - Le ressort AEON® augmentera son diamètre avec la charge.

INSTRUCCIONES DE INSTALACIÓN

a) Levante el vehículo dejando que los ejes cuelguen libremente.
b) Retire la unidad del tope de suspensión existente y los pasadores de retención.
c) Ensamble el resorte de caucho Aeon y la abrazadera como se muestra en el diagrama adyacente.
d) Monte la unidad Timbren utilizando elementos de sujeción del fabricante original de equipo.
e) Baje el vehículo.

NOTAS:
Al remover los elementos de sujeción del fabricante original de equipo, utilice fluido penetrante.

No exceda la carga nominal en el eje recomendada por el fabricant del vehículo. Compruebe que no haya interferencia entre el ressorte AEON®y los otros componentes del vehículo. Bajo carga, el resorte AEON® se ampliá en diámetro.

Ref. = *Reference* = *No. de référence* = *Núm. de referencia*
Part = *Part #.* = *No. de pièce* = *Núm. de pieza*
Qty. = *Quantity* = *Quantité* = *Cantidad*

Ref	Part	Qty
1	F31051-350	2
2	OEM	6
3	K10496-003	2
4	A00535-65Q30	2
5	F11538-380	2

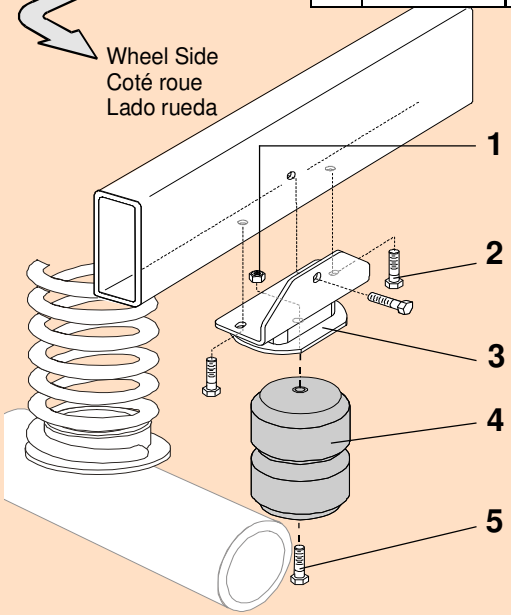

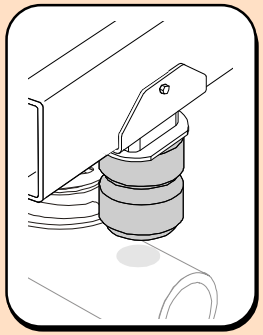

TIMBREN SES

Suspension Enhancement Systems

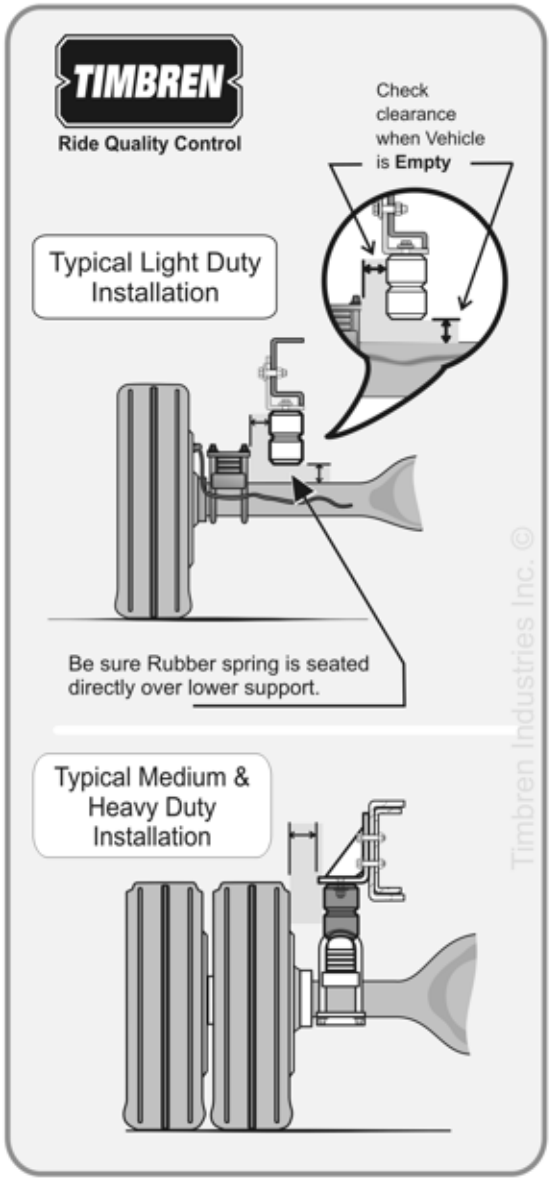

TIMBREN INDUSTRIES INC. © 10/02/09

Clearance Instructions

For Light Duty Pickups & Vans

Rear SES kits should have approximately 1" gap between rubber spring and axle for 1/2 and 3/4 tons, and for one ton the gap should be about 1/2" when the vehicle is completely unloaded. A cap or fifth wheel plate will reduce or eliminate this gap.

Front SES kits are usually in contact with the front suspension

For Medium Duty & Heavy Duty Trucks, Trailers, Motor Homes, and more

Medium & Heavy Duty vehicles often have pre-load as outlined in the instruction sheet. (*For specific Medium Duty applications with a constant load on the suspension like Rvs, Utility Vans or Cube Vans, the Timbren SES kits are pre-loaded.*)

Check clearances when vehicle is empty...

Consider Your Needs..!

Knowing the use of the vehicle will help you to select the right SES kit. For example a one ton truck can be configured as a pick-up, service vehicle or tow truck. Standard capacity or severe service applications are available for many applications.

Knowing that the suspension has been modified or is old and sagging should indicate the need to adjust the ride height to obtain the correct clearance.

This can be done by altering the SES kit (changing rubber spring or bracket) or re-arching the leaf springs to renew the optimum OEM ride height.

Lifetime Warranty

TIMBREN SES kits are warranted against defects in material and workmanship, under normal use and service, for the life of the vehicle on which the kit was originally installed. The warranty is not transferable and proof of purchase is required. The warranty is limited to the replacement of the failed part. TIMBREN will not be responsible for any labour or freight charges involved in the replacement of any product. TIMBREN shall be entitled to make its own inspection to determine the validity of the warranty claim. TIMBREN shall not be liable nor warrant the product in the event of alteration, misuse, overload, negligence or

If ride or performance of our product is unsatisfactory in any way, please call:

TIMBREN INDUSTRIES INC.

1-800-263-3113

LIFETIME SATISFACTION GUARANTEE WARRANTY

www.timbren.com

email: sales@timbren.com