BACKRACK™

FUNCTION AND STYLE FOR TODAY'S TRUCKS

INSTALLATION INSTRUCTIONS

BACKRACK KIT #30317, 30317TB

2005-2015 Toyota Tacoma

READ THIS NOW!

Your truck should look like the one shown. If you think you are missing any parts, think that this part number is not for your truck or have any installation question, call our customer service department at toll free:
800-265-8137 or locally **905 849-3633.**
Other ways to reach BACKRACK:
Fax **905-849-4116**
email: **techsupport@backrack.ca**



The BACKRACK is secured to your truck with a pair of"Stake Pocket Bolts" specifically designed for your make and model of truck. These bolts mount into each of the two front stake pockets. The BACKRACK assembly sits on the bed rails of your truck and is secured to these Stake Pocket Bolts. If your truck has a BEDLINER we suggest you remove it to install the Stake Pocket Bolts

PARTS LIST FOR KIT #30317

PART	DESCRIPTION	QTY
RMB317P	Rail Mount Bracket Passenger	1
RMB317D	Rail Mount Bracket Driver	1
HARDWARE BAG317		
INST043	Installation Instruction	1
FYZ008	1/2"-20 Nylon Hex Lock Nut	2
FYZ011	1/2" Flat Washer	10
FYZ014	1/2"-20 x 3.25" Carrige Bolt Grade 8	2
FYZ032	1/2" - 13 Weld Nut	6
FYZ033	1/2"-13 Hex Bolt Grade 5	6

PARTS LIST FOR KIT #30317TB

PART	DESCRIPTION	QTY
TB317D	Toolbox Bracket Driver	1
TB317P	Toolbox Bracket Passenger	1
HARDWARE BAG317		
INST043	Installation Instruction	1
FYZ008	1/2"-20 Nylon Hex Lock Nut	2
FYZ011	1/2" Flat Washer	10
FYZ014	1/2"-20 x 3.25" Carrige Bolt Grade 8	2
FYZ032	1/2" - 13 Weld Nut	6
FYZ033	1/2"-13 Hex Bolt Grade 5	6

FOR MORE INFORMATION SCAN HERE!

BACKRACK™

FUNCTION AND STYLE FOR TODAY'S TRUCKS

1

Install two (per side) T - nuts per side into C channel on truck bed, and one T - nut on the front C channel as shown.

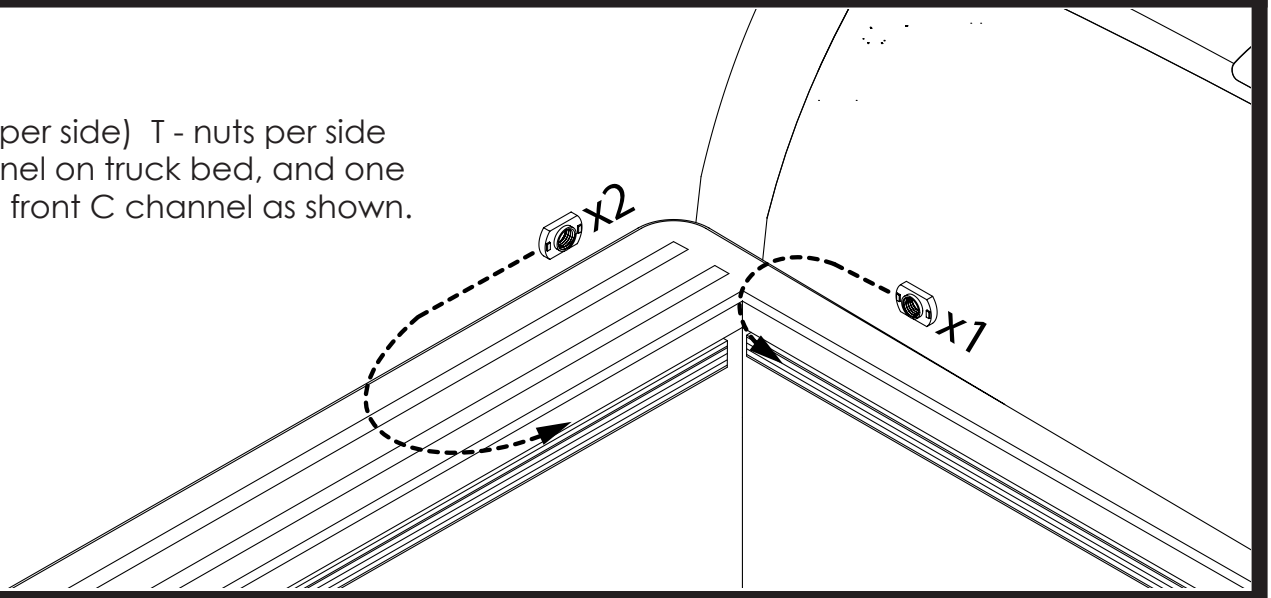

2

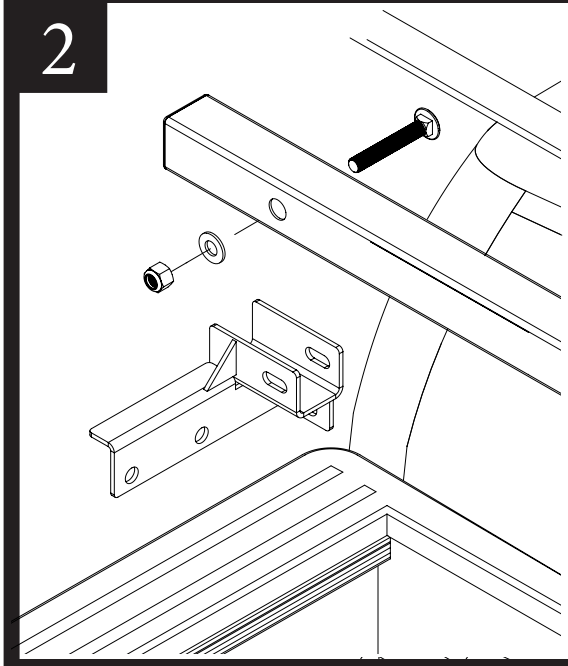

Fasten Backrack to the Rail mount bracket or Tool box bracket. Finger tighten at this stage.

IMPORTANT
Install the carriage bolt as shown in the diagram with the round head closest to the cab. Failure to do so could result in damage to the cab or rear window.

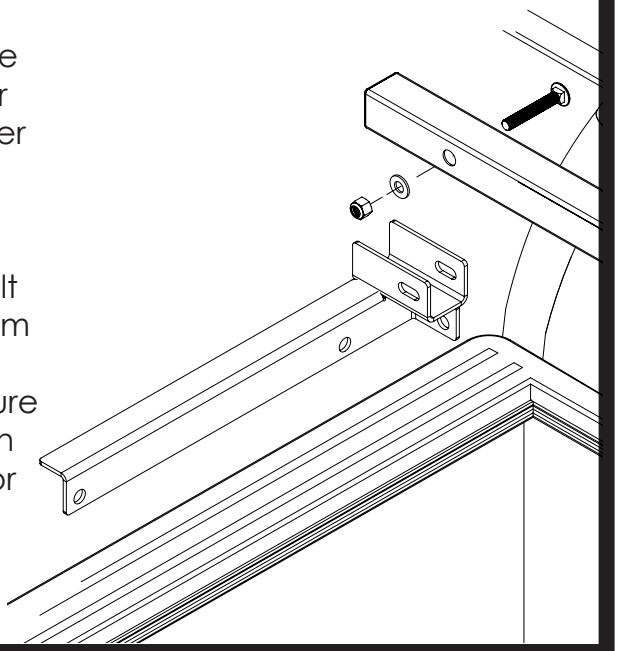

3

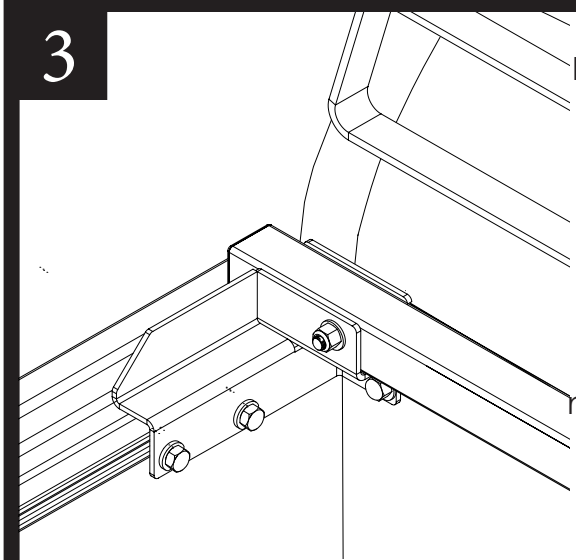

Fasten Backrack Assembly to the C channel on truck bed, align the T nuts and install bolt,and washer.
Center the Backrack assembly on the truck and final torque all bolts starting with the bolts on the inside of the truck bed left, then the rail mount bracket and finally the main BACKRACK carriage bolt

