IMPORTANT!

EARLY VEHICLES with MECHANCAL CLUTCH LINKAGE
may require a physical clutch pedal stop
to prevent over travel of the clutch pressure plate.

Most diaphragm clutch pressure plates require between 5/16” to 7/16” of release bearing travel (once the bearing contacts the clutch fingers) for proper clutch release. This should produce a 0.025” to 0.035” air gap between the pressure plate and the friction disc. Depressing the clutch fingers more than 1/2" can result in clutch pressure plate damage. Centerforce cannot warranty any clutch pressure plate that exhibits signs of over-travel.

Inspect the components of your entire clutch linkage system – replace any component that shows signs of fatigue or wear. Be sure to properly lubricate all moving parts.

Centerforce recommends a minimum of 1/4" freeplay between the clutch release bearing and the clutch fingers. An external clutch return spring is required to hold the clutch release bearing away from the clutch pressure plate fingers when the clutch is fully engaged. Clutch freeplay will diminish and should be re-adjusted and maintained over time as the clutch wears. At no time should the clutch release/engagement point be at or near the top of the clutch pedal travel. This indicates a misadjusted clutch linkage and possible release bearing pre-load condition (release bearing riding on the clutch fingers). Clutch slippage and/or failure can occur very quickly under release bearing pre-load conditions. Centerforce cannot warranty any clutch pressure plate that exhibits signs of release bearing pre-load.

Depending on personal preference, proper clutch engagement point should be a third to half the clutch pedal travel up from the floorboard.

Vehicles originally equipped with a 3 finger (coil spring type) clutch may have an under dash “helper” spring. When converting to a diaphragm type clutch, the under dash helper spring may need to be disabled in order to prevent the clutch pedal from “sticking” to the floor.

IMPORTANT

SST (Solid Street Twin) Installation:

Your new SST Twin Disc clutch set is like no other high-performance clutch on the market. Take a moment to read the following instructions.

Note that your new SST twin disc clutch assembly has already been precision balanced. During final assembly be sure the corresponding pressure plate, floater and flywheel balance markings (located on the outer diameter of the clutch assembly) are all in alignment.

Your SST Twin Disc clutch has been designed to work in conjunction with most factory O.E. bellhousings and clutch release mechanisms without modification. However, installing a new clutch release bearing is always recommended during every new clutch install.

Please be aware that vehicles with **HYDRAULIC** clutch release systems **MAY HAVE** an aftermarket shim or spacer installed between the release bearing and transmission – **PLEASE CHECK**! Your SST clutch system **WILL NOT WORK** in conjunction with **ANY** aftermarket shim or spacer between the release bearing and transmission.

---

1. Carefully unpack your SST twin disc clutch system. Your new clutch assembly has been shipped from the factory exactly as it should be installed in your vehicle. Remove the pressure plate assembly from the flywheel and take careful note of the placement of each component.
2. Please take special care of the three 1/4" diameter anti-rattle pins located on the outer diameter of the flywheel, facing toward the floater plate. Use caution and DO NOT bend or alter these pins.
3. Also, please take note of the six spacers located on the pressure plate studs between the clutch pressure plate and flywheel. Please be sure these spacers remain in place exactly as they were shipped.
4. Install the new clutch pilot bearing supplied (where applicable).
5. Install the flywheel to your engine; USE ONLY the flywheel to crankshaft bolts supplied with this clutch assembly. Torque the flywheel to crankshaft bolts to the supplied specifications.
6. Install the flywheel disc as marked ("Flywheel Side" decal toward the flywheel). Hold the flywheel disc in place and align with the enclosed disc alignment tool. Keep the disc alignment tool centered and in place until the clutch Pressure Plate is fully bolted to the flywheel.
7. Be sure to align the balance index mark on the floater plate to the balance index mark on the flywheel then, install the floater over the three floater drive spools located within the flywheel. The floater ant-rattle pins will locate within the floater plate, 3 places. Note: the floater drive spools are secured to the flywheel with threadlocking compound and have been pre-torqued to the flywheel from the factory. Please do not remove or further tighten the three socket head (Allen head) bolts retaining the floater drive spools.
8. Install the pressure plate disc as marked ("Floater Side" decal toward the floater).
9. During assembly, be sure to align the balance index mark on the pressure plate to the balance marks on the flywheel/ floater plate.
10. Install the clutch pressure plate over the pressure plate studs located within the flywheel. (Note: the clutch pressure plate studs are secured to the flywheel with threadlocking compound from the factory. Please do not remove or further tighten the six clutch pressure plate studs).
11. Threadlocking compound may be used to secure the pressure plate nuts to the flywheel studs if so desired. If using threadlocker on the pressure plate nuts, use only a SMALL amount of MEDIUM (blue) threadlocking compound. Tighten all six pressure plate nuts, ¼ turn at a time in a criss-cross pattern until the pressure plate is completely drawn-up to the spacers against the flywheel. Torque all six nuts to 35 – 38 ft/lbs.
12. Remove the disc alignment tool and install the transmission.

"NOTE"

Should you have questions or if you require further information in regards to your new Centerforce DYAD clutch system please contact our tech line below.

IMPORTANT

Please follow these instructions to maintain the warranty of your Centerforce® product!

Flywheels: All Centerforce® clutches need to be installed on a clean, properly resurfaced or brand new flywheel. Flywheels must be within original equipment specifications. Centerforce clutches are designed to be used on flywheels made of cast iron, steel, or aluminum with steel inserts.

Break-In: All Centerforce clutches require a break-in period of 450-500 miles of stop-and-go street driving before applying full engine power. This period is required to properly seat the disc with the pressure plate and flywheel.

Balance: All Centerforce clutches are balanced from the factory to meet or exceed Original Equipment (O.E.) specifications. Balancing with the Centerforce weights installed on the clutch assembly may cause an out-of-balance condition. Removing the weights without permission from Centerforce may void the warranty.

Centrifugal Weight System: If your new Centerforce clutch is equipped with the patented centrifugal weight system, do not remove the ring, weights, or spring wire retaining the weight system to the diaphragm fingers. If your Centerforce clutch does not include the centrifugal weight system, it is because there is not sufficient clearance for Centerforce to safely & effectively install the centrifugal weight system.

Aftermarket Hydraulic Release Bearings: When using an aftermarket hydraulic release bearing it is important to check for proper clearance between the bearing and the centrifugal weight system. Some aftermarket hydraulic bearings have an anti-rotator pin that may come into contact with the centrifugal weight system.

Failure to follow the above procedures will void your warranty and may result in decreased performance and/or premature wear!

Questions? Please contact the Tech Department at Centerforce

CENTERFORCE® THE PERFORMANCE CLUTCH®

CENTERFORCE DUAL FRICTION®

"NOTE" Centerforce tip sheets are for general reference only. Please refer to your owners manual for vehicle specifications.

IMPORTANT

GENERAL BELLHOUSING ALIGNMENT INSTRUCTIONS

BELLHOUSING ALIGNMENT IS CRUCIAL FOR PROPER CLUTCH FUNCTION AND RELIABILITY OF THE RELATED COMPONENTS. DUE TO MANUFACTURING TOLERANCES OF ENGINE BLOCKS AND BELLHOUSINGS, IT IS POSSIBLE FOR THE TRANSMISSION CENTERLINE AND CRANKSHAFT CENTERLINE TO BE MISALIGNED. THE RESULT OF THIS MISALIGNMENT MAY BE HARD SHIFTING, PILOT BEARING WEAR, TRANSMISSION MAIN SHAFT BEARING WEAR AND FAILURE OF CLUTCH DISC HUB.

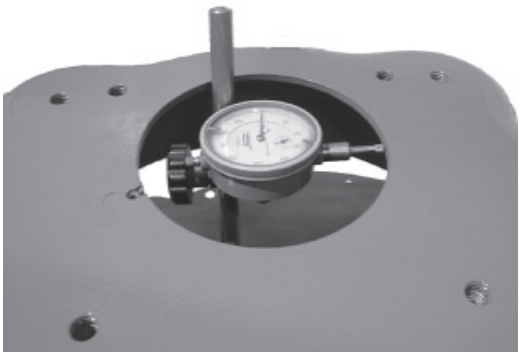

FIRST CHECK BELLHOUSING FOR BORE CONCENTRICITY. INSTALL MAGNETIC BASE TO FLYWHEEL OR PRESSURE PLATE, THEN INSTALL THE INDICATOR TO MEASURE THE BELLHOUSING BORE (SHOWN ABOVE). ROTATE THE CRANKSHAFT AND MARK DOWN THE INDICATOR READINGS (MARKING THE BELLHOUSING WORKS WELL). THE MAXIMUM OUT OF CONCENTRICITY IS .005".

NEXT, THE BELLHOUSING FACE SHOULD BE CHECKED FOR PARALLELISM TO THE BACK OF THE BLOCK. INSTALL THE INDICATOR (AS SHOWN ABOVE). ROTATE THE CRANKSHAFT AND MARK DOWN THE READINGS (BE SURE TO PUSH THE CRANKSHAFT AGAINST THRUST BEARING FOR ACCURATE MEASUREMENT). THE MAXIMUM OUT OF PARALLELISM IS .002"

NOTE: INSPECT BLOCK SURFACE AND BELLHOUSING FOR DENTS, BURRS, PAINT, DEBRIS, ETC. BEFORE INSTALLING AND CHECKING BELLHOUSING ALIGNMENT.

CENTERFORCE THE PERFORMANCE CLUTCH

CENTERFORCE DUAL FRICTION

"NOTE" Centerforce tip sheets are for general reference only. Please refer to your owners manual for vehicle specifications.

CONTINUED ON THE BACK SIDE

CONTINUED

TO CORRECT OFF-CENTER CONDITION, SELECT THE OFFSET DOWEL PIN PAIR THAT IS CLOSEST TO ONE-HALF OF THE INDICATOR READING (I.E., IF READING IS .016", 1/2R=.008" USE .007" DOWELS. IF READING IS .024", 1/2R=.012" USE .014 DOWELS).

EXAMPLE

THE BELLHOUSING WAS OFFSET TOWARD TOP OF ENGINE AND SLIGHTLY TO THE LEFT (AS VIEWED FROM BEHIND). TO ALIGN THE BELLHOUSING, INSTALL TWO .014" OFFSET DOWEL PINS WITH THE MAXIMUM OFFSET POSITIONED ROUGHLY AT THE 5 O'CLOCK POSITION.

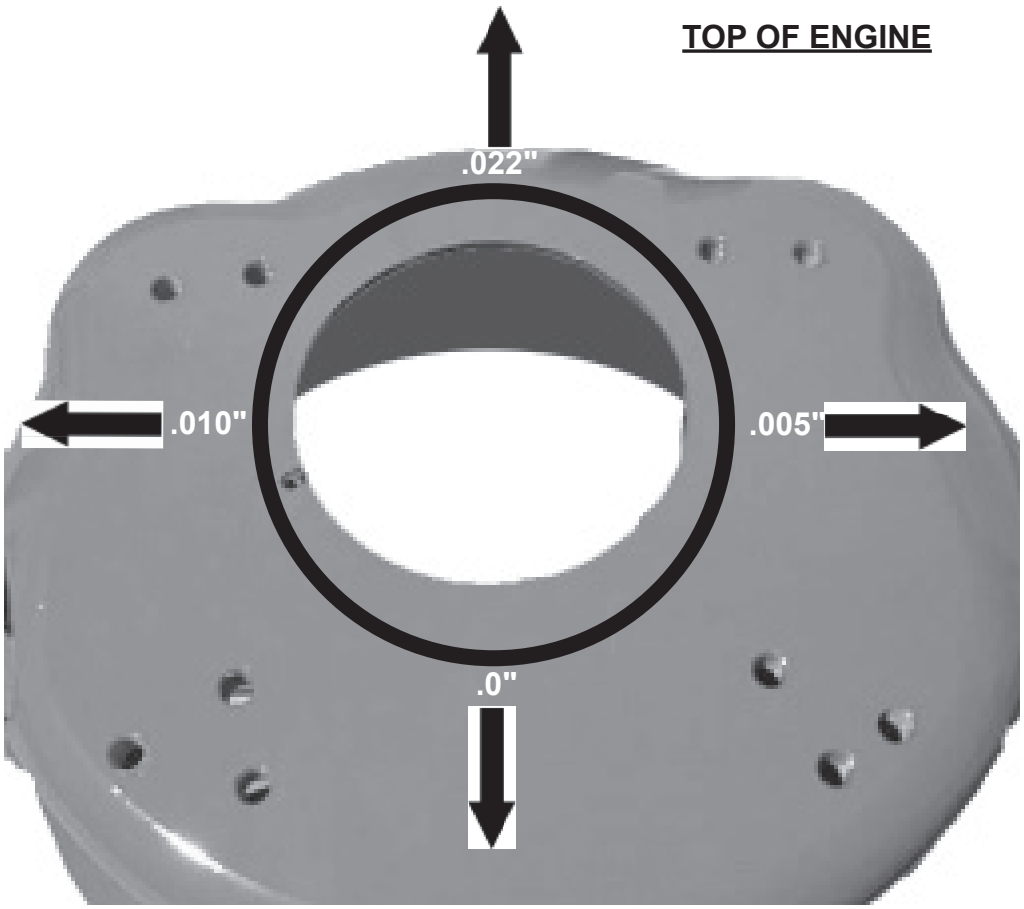

OFFSET DOWEL PIN CHART

TOTAL INDICATOR READING	ONE HALF TOTAL INDICATOR READING	SIZE DOWEL TO BE USED
.012" TO .020"	.006" TO .010"	.007"
.022" TO .034"	.011" TO .017"	.014"
.036" TO .052"	.018" TO .026"	.021"

	GM			FORD/CHRYSLER
	LAKEWOOD	MOROSO	TAVIA	LAKEWOOD
.007	15920	37934	02701	15950
.014	15930	37936	02702	15960
.021	15940	37938	02703	15970