LIPPERT COMPONENTS®

Solera® by Lippert Components®

Solera® Power Awning

Installation and Owner's Manual

(For Aftermarket Applications)

Table of Contents

Introduction 2
Prior To Installation 2
Resources Required 2
Awning Rail Installation (if needed) 3
Awning Installation 4
Securing The Fabric 6
Installation With Speakers Option 8
Installation With LED Options 8
- LED Roll Tube Installation 8
- LED Light Rail Installation 9
- Seal Wall Penetrations 9

Operation 9
- Extending the Awning 9
- Retracting the Awning 10
- Adjusting Pitch 10

Troubleshooting 11
- Manual Override 11

Solera Power Awning Troubleshooting 12
- Solera Power Awning Troubleshooting (Continued) 13

Maintenance - Solera Awnings 13
- Fabric Care 13

Notes 14

LIPPERT COMPONENTS®

Solera® Power Awning

Installation and Owner's Manual

(For Aftermarket Application)

Introduction

The Solera® Power Awning features an internal motor to steadily operate the awning. Additionally, the pitch arm assembly allows for rain dump and adjustable pitch features. The pitch arm assembly also provides added stability.

Additional information about this product can be obtained from lci1.com/support or by downloading the free myLCIapp. The app is available on iTunes® for iPhone® and iPad® and also on Google Play™ for Android™ users.

iTunes®, iPhone® and iPad® are registered trademarks of Apple Inc.

Google Play™ and Android™ are trademarks of Google Inc.

⚠WARNING

THIS MANUAL PROVIDES OPERATIONAL PROCEDURES FOR THE SOLERA POWER AWNING. OPERATING THE SOLERA POWER AWNING IN ANY OTHER MANNER THAN DESCRIBED MAY RESULT IN PERSONAL INJURY, DAMAGE TO THE RECREATIONAL VEHICLE UNIT OR THE AWNING ASSEMBLY AS WELL AS VOIDING THE LIPPERT COMPONENTS LIMITED WARRANTY.

⚠WARNING

THE "WARNING" SYMBOL ABOVE IS A SIGN THAT AN INSTALLATION PROCEDURE HAS A SAFETY RISK INVOLVED AND MAY CAUSE DEATH OR SERIOUS INJURY IF NOT PERFORMED SAFELY AND WITHIN THE PARAMETERS SET FORTH IN THIS MANUAL. ALWAYS WEAR EYE PROTECTION WHEN PERFORMING THIS INSTALLATION PROCEDURE. OTHER SAFETY EQUIPMENT TO CONSIDER WOULD BE HEARING PROTECTION, GLOVES, AND POSSIBLY A FULL FACE SHIELD, DEPENDING ON THE NATURE OF THE INSTALLATION PROCEDURE.

⚠CAUTION

MOVING PARTS CAN PINCH, CRUSH OR CUT. KEEP CLEAR AND USE CAUTION.

Prior To Installation

All screws supporting the awning assembly must have a backer within the structure of the wall of the unit. Refer to the unit manufacturer for proper location.

This manual will refer to the "drive side" and "idler side" throughout for various instructions. The "drive side" is the right hand side of the awning when facing the awning from the exterior of the unit. The "idler side" is the left hand side of the awning when facing the awning from the exterior of the unit.

Resources Required

- 1-3 People, depending on the task
- Cordless or Electric Drill or Screw Gun
- Appropriate Drive Bits
- Rivet Gun (if needed)
- Non-Permanent Method of Marking
- Silicone Sealant or Butyl Tape
- Screwdriver
- Silicone Lubricant
- Scissors/Utility Knife
- Wire Cutters/Strippers

Awning Rail Installation (if needed)

NOTE: Awning rail not included.

1. Position the awning rail along the line where roof and wall meet OR:

A. For pitched awnings: A minimum of 6" above doors or windows

B. For flat awnings: A minimum of 2 ½" above doors or windows

NOTE: The awning rail must be level and parallel with the floor line of the unit **(Fig.1)**.

2. After determining the awning rail's proper location, mark its position with a non-permanent method of marking.

3. Seal the back of the awning rail.

4. Align the awning rail on the wall and secure with #10 x ¾" screws, using all fastener holes.

Letter	Description
A	Awning Rail
B	Support Arm Assembly
C	Roll Tube Assembly

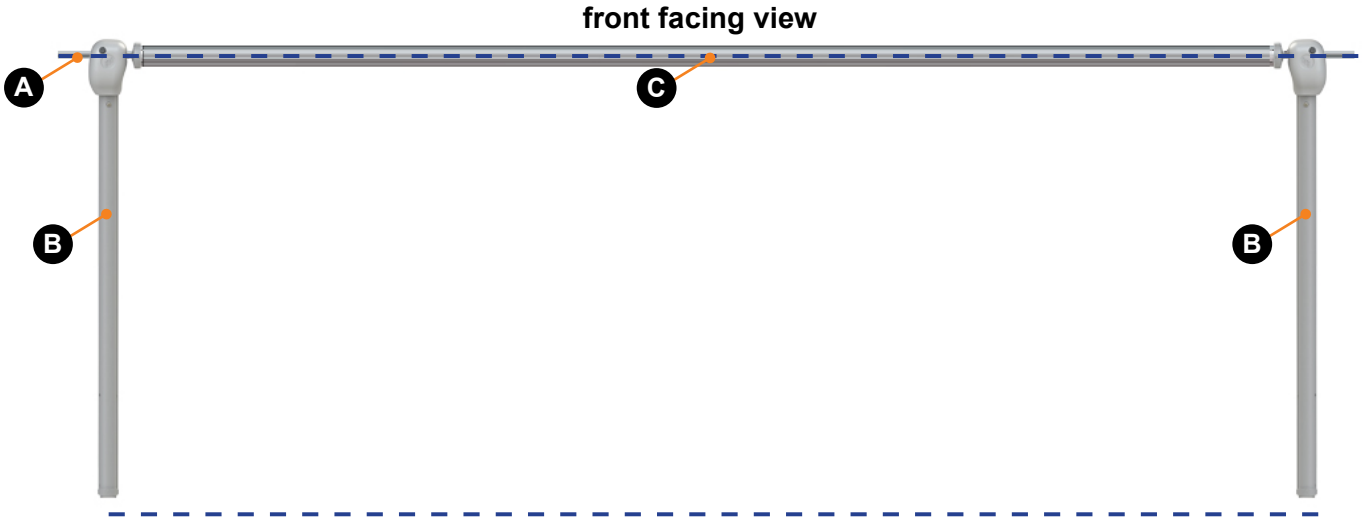

Fig.1

Awning Installation

1. On the awning rail, mark the position of the centerlines of the support arm assemblies. Make sure the support arm assemblies will not interfere with any lights, vents or other obstructions.

2. Using a non-permanent method of marking, mark a perpendicular line from the awning rail down to the floor line. This is the centerline of the support arm assembly **(Fig.2)**.

3. Insert the drive head assembly shaft into the end cap **(Fig.3)**. Align the holes and secure with waxed screw. Repeat process for idler head assembly at opposite end.

NOTE: Keep the head of the wax screw ⅛" from fastened to avoid compromising the structural integrity of the wax screw.

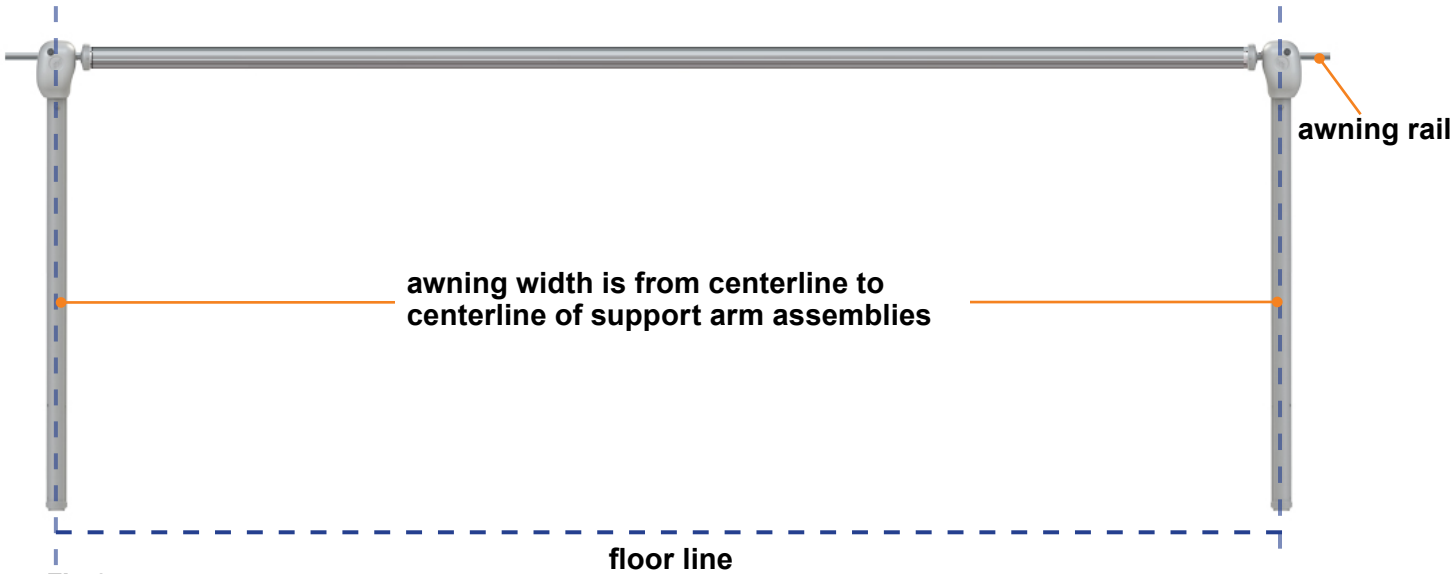

Fig.2

Fig.3

4. Use a screwdriver to spread open either end of the awning rail channel on the installation side **(Fig.4A)**.

5. To protect the fabric from damage during installation, file any sharp edges or burrs from the awning rail channel.

6. Use silicone lubricant and spray the inside of the awning rail channel **(Fig.4B)**.

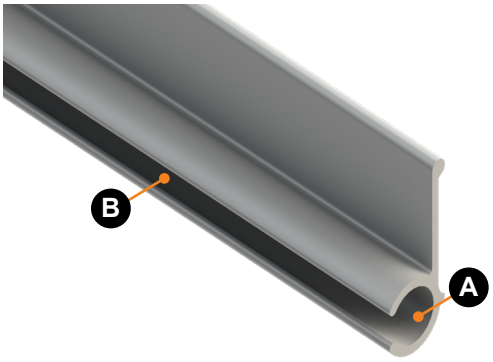

Fig.4

7. Remove the tape from the fabric. Unroll a small portion of fabric.

NOTE: The next steps will require three people: One to feed the polycord into the awning rail channel; two to walk the support arm assemblies along the awning rail while the fabric slides into position.

8. Slide the polycord into the awning rail channel and walk the support arm assemblies and fabric down the awning rail channel until the support arm assemblies are in line with the previously-made centerline marks.

9. Lift the support arm assembly up and secure by setting the awning assembly to the desired height and attaching it to the side of the unit with two #14 x 1 ¼" screws at the top **(Fig.5)** and two #14 x 1 ¼" screws at the bottom **(Fig.6)**.

Fig.5

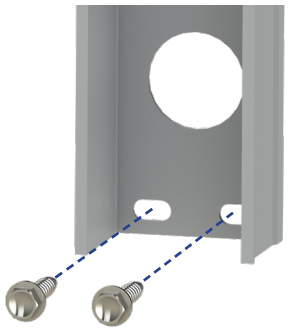

Fig.6

NOTE: Best practice for setting the awning height is to push the top of the support arm assemblies up to be flush with the bottom of the awning rail. The awning height can be adjusted lower if desired, but make sure the distance from the awning rail to the top of the support arm assemblies is consistent at both ends of the awning.

NOTE: Make sure the awning assembly is square on the unit prior to mounting the bottom two screws.

NOTE: Four rivets with 3⁄16" grip range can be used in place of the two middle and two lower screws on laminated walls.

10. Cut the zip ties and connect the wires from the drive head assembly to a power source and run the awning halfway out.

11. Remove the wire cover to expose the fastening points.

12. Install the remaining two #14 x 1 ¼" screws at any of the three locations shown **i**n the center of the support arm **(Fig. 7)**.

13. Repeat this process for the other side of the awning assembly.

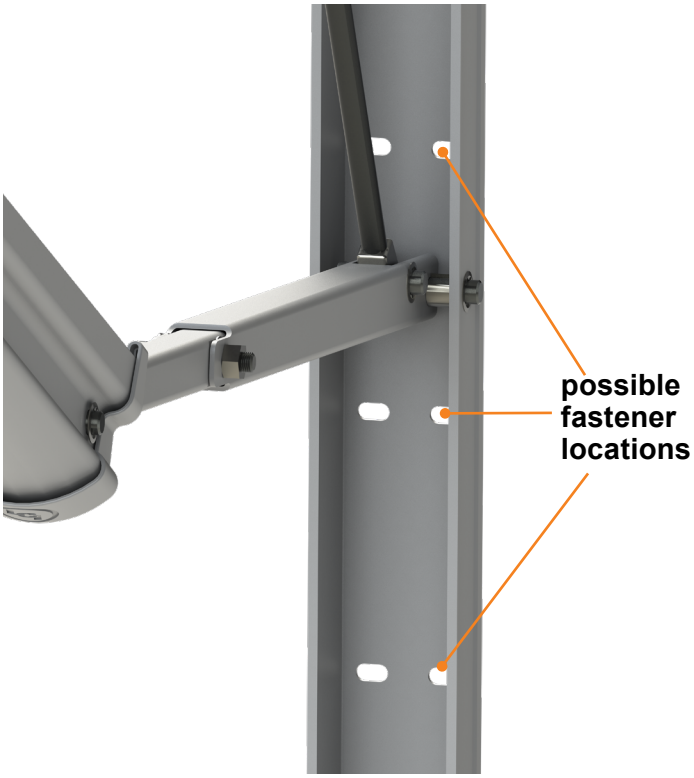

Fig.7

Securing The Fabric

1. Extend and retract the awning several times to make sure the fabric is square on the roll tube.

2. Secure the fabric in the awning rail no more than 1" inside the edge of the fabric on both ends using a #6 x ½" hex head screw.

3. Install the screw down through the awning rail into the fabric and the polycord **(Fig.8)**.

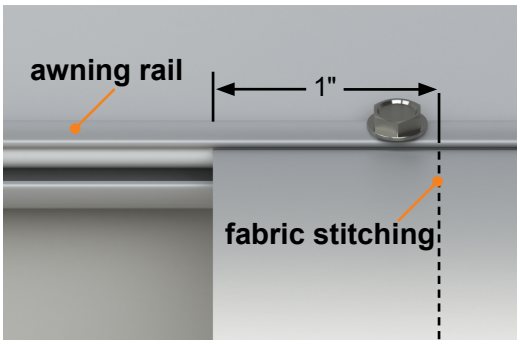

Fig.8

Awning Wiring

Solera Power Awning motors come stock with an internal 6A auto-reset breaker. If this breaker trips, it will reset in approximately 30 seconds. LCI recommends that the awning be wired into a 15A circuit breaker.

All wire shall be 14 AWG or higher AWG as necessary to provide 12V minimum at all times to the LCI-supplied power cable.

1. Pull the wires from the unit through the support arm assembly. These wires may be located at the bottom or the top of the support arm assembly.

2. Connect wiring from the unit to the switch and the awning drive head per the wiring diagram **(Fig.9)**.

NOTE: Check the manual rocker switch for normal operation. If the awning is running in reverse of what the switch indicates, reverse the wires.

NOTE: To prevent pinching of the wires, make sure all wires are routed on the outside of the pin that secures the pitch arm to the mount arm **(Fig.10)**.

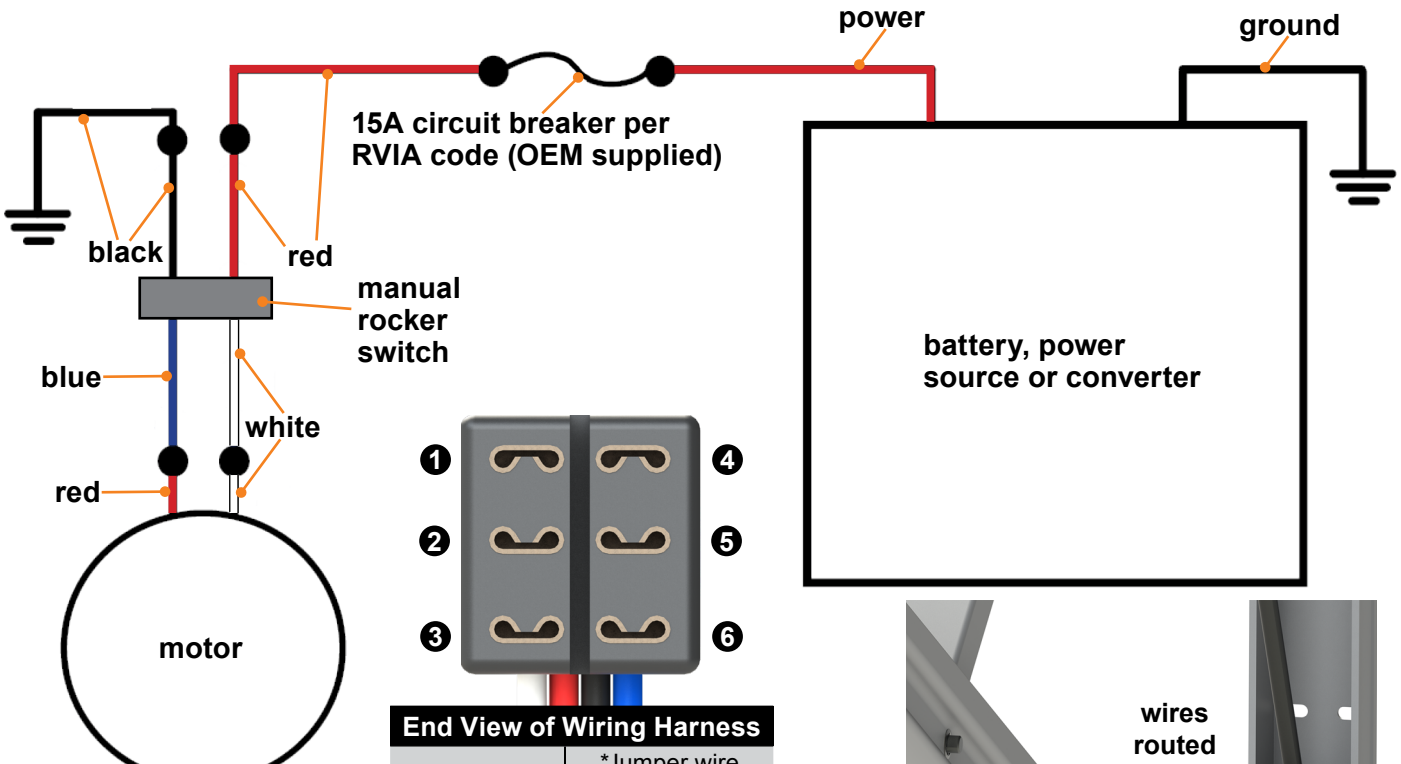

End View of Wiring Harness	
Red	*Jumper wire 1 to 6
Black	*Jumper wire 4 to 3
White	2
Blue	5

*Jumper wires are internal

Fig.9

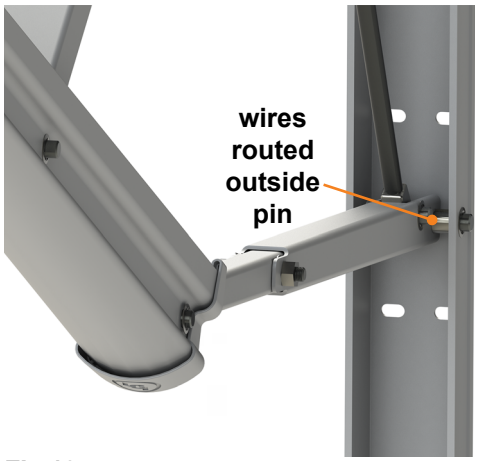

Fig.10

Installation With Speakers Option

1. Remove the wire covers in both mount arms.

2. At both support arm assemblies there will be a wire labeled "speakers." Connect these to the radio wires provided from the unit **(Fig.11)**.

NOTE: Speaker wire is indicated with a blue insulation on the wiring.

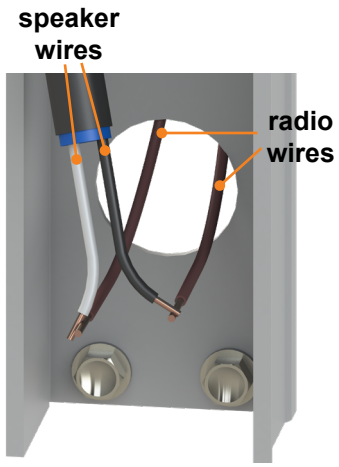

Fig.11

NOTE: On the drive side, the speaker wire will be connected at the same location on the support arm assembly as the power wire for the motor. On the idler side, the speaker wire may be connected at the top or bottom of the support arm assembly.

Installation With LED Options

LED Roll Tube Installation

1. Remove the wire covers in the idler side mount arm.

2. Make sure to align LED light wires **(Fig.12A)** coming from the idler head with the LED light on the roll tube **(Fig.12B)**.

3. Connect the plug from the idler head **(Fig.12A)** to the plug from the LED light **(Fig.12B)** on the roll tube.

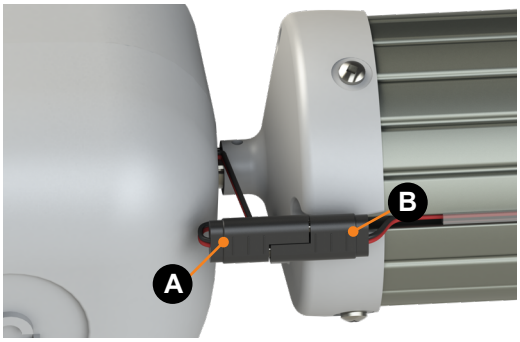

Fig.12

4. Take the LED power wire that is already fed through the idler leg and connect to the desired power wire from the unit.

NOTE: Make sure the black wire is connected to a ground wire and the red wire is connected to a 3A maximum fuse (usually behind the switch) and then to a power source from the unit.

LED Light Rail Installation

NOTE: Solera Power Awning must be installed prior to LED Light Rail installation.

1. Seal the back of the LED light rail with silicone sealant or Butyl tape.

2. Mount the LED light rail **(Fig.13B)** directly below the awning rail **(Fig.13A)** and secure to the side of the unit.

3. Remove the wire covers in the drive side mount arm.

4. Route the light wire over the top of the upper brackets on the drive side mount arm and run the light wire down through the mount arm **(Fig.13C)**.

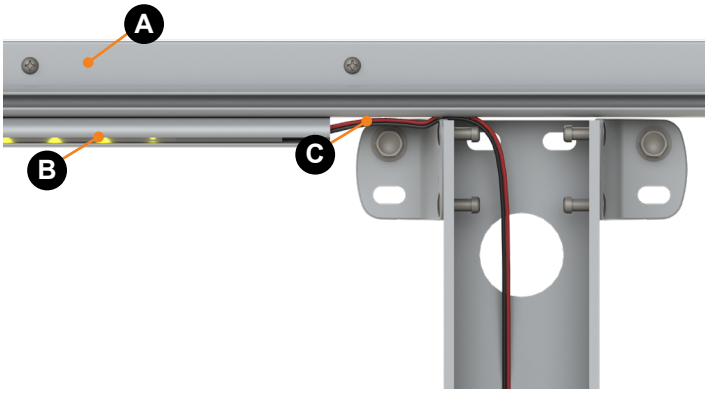

Fig.13

5. Cut the power and ground wires to the desired length and connect to the unit wiring. Make sure to connect the red wire on the light side to the power wire on the unit side and connect the black wire from the light side to the ground wire from the unit side.

NOTE: The LED light rail must be wired through a 3A maximum fused circuit.

Seal Wall Penetrations

1. Seal all fastener locations and wire penetrations to protect against water intrusion **(Fig.14)**.

Fig.14

2. Reinstall all wire covers into the support arm assemblies.

Operation

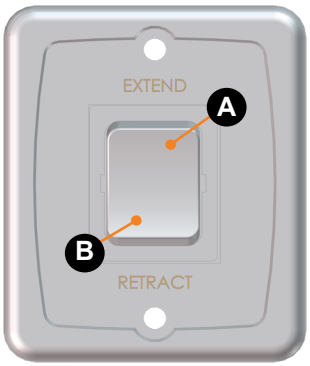

Fig.15

NOTE: Some units may not use the LCI switch **(Fig.15)**.

Extending the Awning

1. Verify the RV battery is fully charged and connected to the electrical system.

2. Locate the locking latch on the side of the support arm, if equipped, and unlock the latch.

NOTE: This latch is optional and may or may not be installed on one or both support arms.

3. Press and hold EXTEND **(Fig.15A)** until the awning is extended completely.

Extension is considered complete when the fabric is completely unrolled, the valance is hanging down from the roll tube and a section of the roll tube is exposed **(Fig.16).**

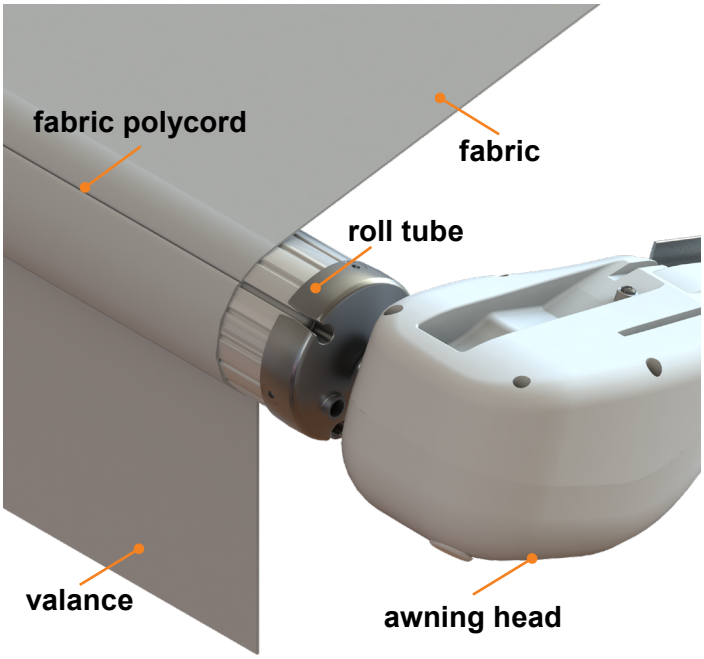

Fig.16

The awning fabric should always be above the roll tube. However, if the EXTEND switch is engaged too long or EXTEND is hit inadvertently instead of RETRACT, the awning will roll up backward. This is not a defect. To correct the fabric orientation, press the RETRACT button **(Fig.15B)**. The awning will then extend to its correct orientation and normal operation can resume.

⚠ CAUTION

TYING DOWN THE ROLL TUBE ONCE THE AWNING IS EXTENDED WILL NOT ALLOW THE FREE-FLOATING SUPPORT ARMS TO WORK AS DESIGNED AND MAY CAUSE DAMAGE TO THE AWNING OR UNIT.

Retracting the Awning

1. Verify the RV battery is fully charged and connected to the electrical system.

NOTE: The awning can be retracted without resetting the pitch.

2. Press and hold RETRACT **(Fig.15B)** until the awning is retracted completely.

3. Locate the locking latch on the side of the support arm, if equipped, and lock the latch.

NOTE: This latch is optional and may or may not be installed on one or both support arms.

Adjusting Pitch

NOTE: The awning will pitch itself to purge the pooling of excess water and may dump a significant amount of water without notice.

4. Pitch can be set by adjusting the pitch arm to tip one side of the awning to allow water runoff or shade.

5. Extend the awning to the fully open position.

6. Choose the side of the awning for optimum shade or convenient water runoff. Pull downward on the joint of the pitch arm until desired pitch is set **(Fig.17)** to allow for water runoff.

NOTE: Do not push the joint of the pitch arm up past the point where the two sections are in line. This will put tension on the gas strut, which can cause the strut to break.

Fig.17

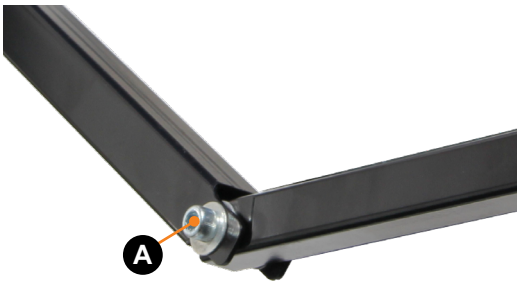

Fig.18

NOTE: The awning can be retracted without resetting the pitch.

NOTE: Belleville washers and bolts **(Fig.18A)** allow the joint to remain in the position set by the operator. If the pitch arm does not hold position, it can be tightened by adjusting the bolt **(Fig.18A)** in the center of the pitch arm.

Troubleshooting

Manual Override

In the event of power loss or motor failure, the awning can be extended and retracted manually. Perform the following procedure to manually retract the awning.

NOTE: This procedure may also be performed to extend or retract the awning in the event of dry camping or camping without a battery.

1. Remove the rubber grommet **(Fig.19A)** from the drive head assembly, exposing the manual override nut on the motor.

Fig.19

NOTE: The drive head assembly is always located on the right side of the awning as it is viewed from outside of the unit.

2. Using a 7⁄16" socket and cordless or electric drill or screw gun, spin the manual override nut counterclockwise to retract the awning **(Fig.20)**.

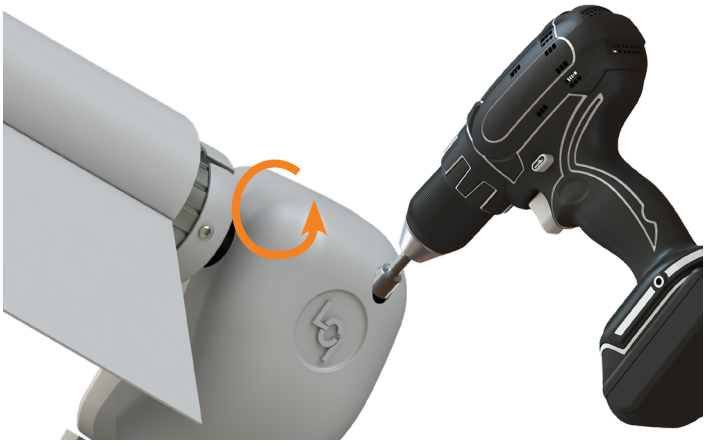

Fig.20

NOTE: Use caution when retracting the awning manually. The use of a step stool or ladder may be required to completely retract the awning.

3. When the awning is completely retracted, replace the rubber grommet in the drive head assembly **(Fig.19A)**.

NOTE: The motor's internal drive system prevents the awning from moving (extend or retract) on its own. If the motor is damaged or disabled, make sure to secure the awning in the retracted position with a strap around both the outer arm and the mount arm before the manual override nut is released.

⚠ CAUTION

DURING INCIDENTS OF HIGH WIND, HEAVY RAIN OR EXTENDED TIME AWAY FROM THE UNIT, IT IS ADVISABLE TO RETRACT THE AWNING COMPLETELY TO PREVENT DAMAGE TO THE AWNING AND THE UNIT.

Solera Power Awning Troubleshooting

What's Happening?	What Should Be Done?
Awning won't open or close.	If optional travel locks are installed, make sure that they have been unlocked.
	Verify the fuse is good.
	Check for power at the motor when the switch is in the extended or retracted position.
Awning pitch won't stay in the flat position.	Check for bad gas strut.
	Check pitch arm bolt for proper tension. (High winds can cause the pitch arm to deviate from the flat position due to the built-in safety feature of the awning.)
	Make sure all three washers are in the proper location of the pitch arm.
Awning doesn't close all the way.	The awning is considered completely closed as long as the outer arm is overlapping the mount arm. This overlap can vary.
	Make sure there are no obstructions in the support arm assemblies preventing the awning from closing.
	Verify the fabric is square from unit to roll tube and is rolling up straight on the roll tube.
Awning runs slow.	The awning will run slower during retract than extend. Retract is approximately 35 seconds while extend is approximately 27 seconds on a fully-charged battery.
	Make sure there are 12 volts where the unit wire meets the awning wire during retract.
	Make sure pitch arms are not bent in an upward direction.
	Make sure the ground wire before the switch has a good connection to the battery or chassis.
Lights won't work.	There is a resettable fuse that can take up to 30 seconds to reset.
	Make sure to have 12 volts to the red wire on the light.
Awning seems to wobble when extending or retracting.	Make sure the bolts that hold the head to the support arm assemblies are tight.
	Make sure end caps are seated properly on the roll tube.
	Make sure the shaft coming out of the head going to the end cap isn't bent.
	Make sure the wall mount is properly secured to the wall.
	Make sure no part of the support arm assemblies are bent.
	Make sure the wear collar spacers are all properly located in the support arm assemblies.

Solera Power Awning Troubleshooting (Continued)

What's Happening?	What Should Be Done?
Awning works in opposite direction of what switch shows.	Wires going to awning have been reversed or switched. Reverse the wires.
Awning rolls up backward.	The awning fabric should always be above the roll tube. However, if the extend switch is engaged too long or EXTEND is hit inadvertently instead of RETRACT, the awning will roll up backward. This is not a defect. To correct the fabric orientation, press the RETRACT button. The awning will then extend to its correct orientation and normal operation can resume.

Maintenance - Solera Awnings

Fabric Care

If the awning is retracted while wet, extend the awning and let it dry as soon as conditions allow before again retracting. This will help prevent the formation of mildew and add to the life of the awning.

NOTE: Mildew does not form on the fabric itself, but on the accumulated dust, dirt and grime.

Periodically clean vinyl or woven acrylic fabric using a mixture of ¼ cup of dish soap and five gallons of warm water.

1. Liberally apply the mixture on the top of the fabric and retract the awning for five minutes.

2. Apply the mixture to the bottom of the fabric as well.

3. Extend the awning and hose off with fresh water.

4. Repeat if necessary.

5. Allow to dry before retracting.

Notes

Notes

Notes

LIPPERT COMPONENTS®

Manual information may be distributed as a complete document only, unless Lippert Components provides explicit consent to distribute individual parts.

All manual information is subject to change without notice. Revised editions will be available for free download at lci1.com. Manual information is considered factual until made obsolete by a revised version.

Please recycle all obsolete materials and contact Lippert Components with concerns or questions.