IMPORTANT

DYAD DS and DYAD XDS Installation:

Your new DYAD DS & DYAD XDS Twin Disc clutch set is like no other high-performance clutch on the market. Take a moment to read the following instructions. Also, see the enclosed component diagram to familiarize yourself with the various unique parts of your new DYAD DS & DYAD XDS clutch system. Lastly, find your enclosed clutch specification card. Please keep this and all DYAD DS & DYAD XDS clutch related paper work in a safe place for future reference.

Note that your new DYAD DS & DYAD XDS twin disc clutch assembly has already been precision balanced. See the enclosed specification card for the exact balance results. During final assembly be sure the corresponding pressure plate, floater and flywheel balance markings (located on the outer diameter of the clutch assembly) are all in alignment.

Although an SFI approved aftermarket bellhousing is recommended, your DYAD DS & DYAD XDS Twin Disc clutch has been designed to work in conjunction with most factory O.E. bellhousings and clutch release mechanisms without modification. However, installing a new clutch release bearing is always recommended during every new clutch install.

Please be aware that vehicles with **HYDRAULIC** clutch release systems **MAY HAVE** an aftermarket shim or spacer installed between the release bearing and transmission – **PLEASE CHECK**! Your DYAD DS & DYAD XDS clutch system **WILL NOT WORK** in conjunction with **ANY** aftermarket shim or spacer between the release bearing and transmission.

---

1. Carefully unpack your DYAD DS & DYAD XDS twin disc clutch system. Your new clutch assembly has been shipped from the factory exactly as it should be installed in your vehicle. Remove the pressure plate assembly from the flywheel and take careful note of the placement of each component.
2. Please take special care of the three 1/4" diameter anti-rattle pins located on the outer diameter of the flywheel, facing toward the floater plate (see component diagram). Use caution and DO NOT bend or alter these pins.
3. Also, please take note of the six spacers located on the pressure plate studs between the clutch pressure plate and flywheel. Please be sure these spacers remain in place exactly as they were shipped.
4. Install the new clutch pilot bearing supplied (where applicable).
5. Install the flywheel to your engine; USE ONLY the flywheel to crankshaft bolts supplied with this clutch assembly. Torque the flywheel to crankshaft bolts to the supplied specifications.
6. Install the drive disc as marked ("Flywheel Side" decal toward the flywheel). Note: the six disc drive pins will face toward the transmission. Hold the drive disc in place and align with the enclosed disc alignment tool. Keep the disc alignment tool centered and in place until the clutch Pressure Plate is fully bolted to the flywheel.
7. Be sure to align the balance index mark on the floater plate to the balance index mark on the flywheel then, install the floater over the three floater drive spools located within the flywheel. The floater ant-rattle pins will locate within the floater plate, 3 places. Note: the floater drive spools are secured to the flywheel with threadlocking compound and have been pre-torqued to the flywheel from the factory. Please do not remove or further tighten the three socket head (Allen head) bolts retaining the floater drive spools.
8. Install the floating disc as marked ("Floater Side" decal toward the floater) and engage over the six drive pins from the drive disc.
9. During assembly, be sure to align the balance index mark on the pressure plate to the balance marks on the flywheel/ floater plate.
10. Install the clutch pressure plate over the pressure plate studs located within the flywheel. (Note: the clutch pressure plate studs are secured to the flywheel with threadlocking compound from the factory. Please do not remove or further tighten the six clutch pressure plate studs).
11. Threadlocking compound may be used to secure the pressure plate nuts to the flywheel studs if so desired. If using threadlocker on the pressure plate nuts, use only a SMALL amount of MEDIUM (blue) threadlocking compound. Tighten all six pressure plate nuts, ¼ turn at a time in a criss-cross pattern until the pressure plate is completely drawn-up to the spacers against the flywheel. Torque all six nuts to 35 – 38 ft/lbs.
12. Remove the disc alignment tool and install the transmission.

"NOTE"

Should you have questions or if you require further information in regards to your new Centerforce DYAD clutch system please contact our tech line below.

IMPORTANT

DYAD DS & DYAD XDS COMPONENT DIAGRAM

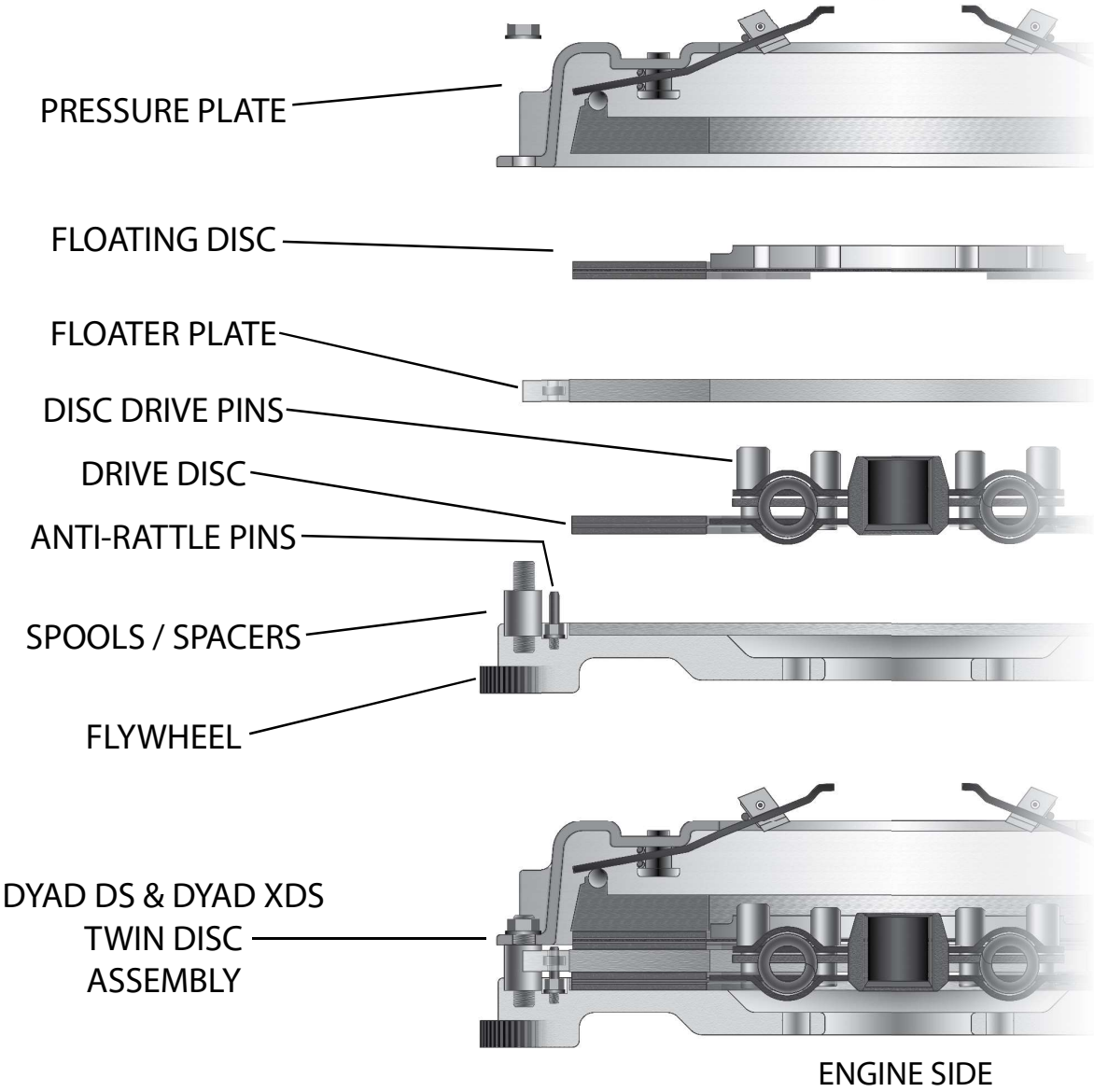

"NOTE"

Please observe the critical 500 mile clutch break-in period as described within the enclosed tip sheet.
Centerforce tip sheets are for general reference only.
Please refer to your owners manual for vehicle specifications.
Should you have questions or if you require further information in regards to your new Centerforce DYAD clutch system please contact our tech line.

IMPORTANT

2011-17 Ford Mustang 5.0L engine
w/ 23 Spline input shaft transmission

If your Original Equipment transmission included a spacer behind the release bearing, please re-use this spacer. Some OE transmissions did not require a release bearing spacer, and therefore your vehicle may not have one.

Upon replacing your release bearing, please verify the bellhousing face to release bearing (fully extended) dimension as shown to the right. This dimension can be obtained by using a long straight edge or yard stick across the mouth of the bellhousing and then measuring to the face of the release bearing (DO NOT include the thickness of the straight edge in your measurement).

Regardless of transmission type (with or without the OE bearing spacer) your measurement should be 2-3/8” (+/- 1/16”) as shown. If you obtain a measurement outside of this tolerance, please contact our Technical Department for additional information.

If your bellhousing to release bearing measurements meets the 2-3/8” depth specification, proceed with the clutch/ transmission installation as normal.

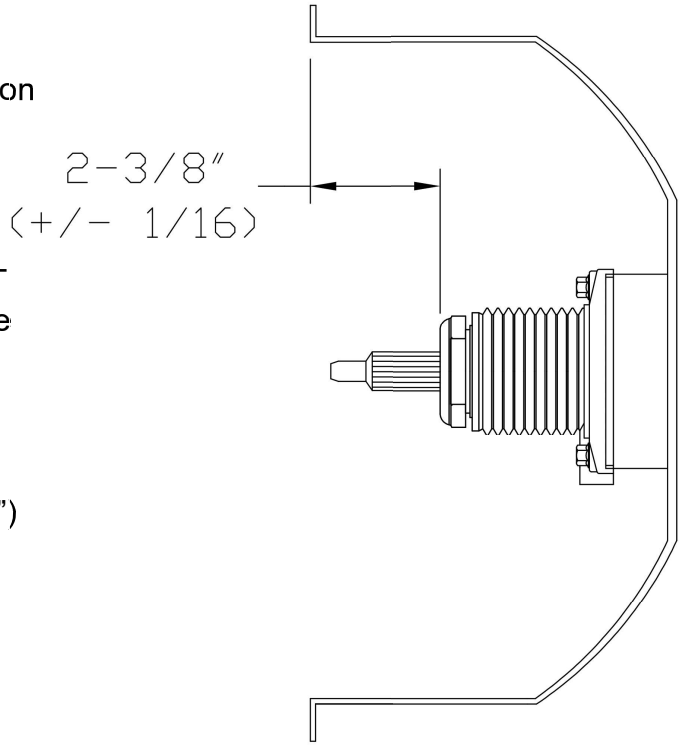

BELLHOUSING
SIDE VIEW CUT-A-WAY

Should you have questions or require further information,

please contact our Tech Line at: (928) 771-8422

"NOTE" Centerforce tip sheets are for general reference only. Please refer to your owners manual for vehicle specifications.

IMPORTANT

IMPORTANT

2011-Up Ford V8 engines with the check engine light displayed after a clutch replacement

Per Ford TSB 21474: Not all, but some vehicle owners may get a Check Engine light and Random Cylinder Misfire Code (P030x) after performing a clutch replacement. To clear this code, you must use a Ford Integrated Diagnostic System (IDS) scan tool or equivalent. Your Ford Dealer or trained Auto Repair facility will need to perform a Misfire Monitor Neutral Profile Correction using the IDS scan tool.

For more information, please contact your local Ford Dealer or consult your Ford Factory Service Manual.

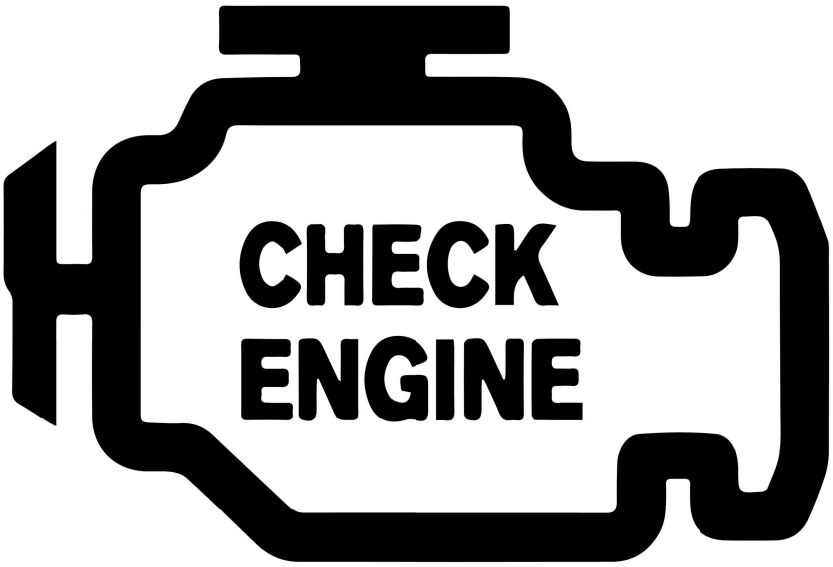

Should you have questions or require further information,

please contact our Tech Line at: (928) 771-8422

"NOTE" Centerforce tip sheets are for general reference only. Please refer to your owners manual for vehicle specifications.

IMPORTANT

IMPORTANT

Please follow these instructions to maintain the warranty of your Centerforce® product!

Flywheels: All Centerforce® clutches need to be installed on a clean, properly resurfaced or brand new flywheel. Flywheels must be within original equipment specifications. Centerforce clutches are designed to be used on flywheels made of cast iron, steel, or aluminum with steel inserts.

Break-In: All Centerforce clutches require a break-in period of 450-500 miles of stop-and-go street driving before applying full engine power. This period is required to properly seat the disc with the pressure plate and flywheel.

Balance: All Centerforce clutches are balanced from the factory to meet or exceed Original Equipment (O.E.) specifications. Balancing with the Centerforce weights installed on the clutch assembly may cause an out-of-balance condition. Removing the weights without permission from Centerforce may void the warranty.

Centrifugal Weight System: If your new Centerforce clutch is equipped with the patented centrifugal weight system, do not remove the ring, weights, or spring wire retaining the weight system to the diaphragm fingers. If your Centerforce clutch does not include the centrifugal weight system, it is because there is not sufficient clearance for Centerforce to safely & effectively install the centrifugal weight system.

Aftermarket Hydraulic Release Bearings: When using an aftermarket hydraulic release bearing it is important to check for proper clearance between the bearing and the centrifugal weight system. Some aftermarket hydraulic bearings have an anti-rotator pin that may come into contact with the centrifugal weight system.

Failure to follow the above procedures will void your warranty and may result in decreased performance and/or premature wear!

Questions? Please contact the Tech Department at Centerforce

CENTERFORCE® THE PERFORMANCE CLUTCH®

CENTERFORCE DUAL FRICTION®

"NOTE" Centerforce tip sheets are for general reference only. Please refer to your owners manual for vehicle specifications.