IMPORTANT

Please follow these instructions in regards to the installation and use of your new Centerforce DFX

Flywheels: Be sure to install your new Centerforce DFX clutch on a clean and properly resurfaced or brand new flywheel. Centerforce recommends DFX to be used in conjunction with an aftermarket Billet Steel or Billet Aluminum (with steel insert) flywheel. Nodular Cast Iron OE flywheels are also approved. Gray Cast Iron OE flywheels are NOT recommended for use with Centerforce DFX (If you are unsure of what type of cast flywheel you have please call the tech office).

Break-In: The Centerforce DFX series clutch will perform best after a minimum 100-mile break-in period. Stop and go type driving is best for this procedure. Please do not apply full engine power or excessively slip the clutch during the break-in period. This period is required to properly seat the disc with the pressure plate and flywheel friction surfaces.

Centrifugal Weight System: If your new Centerforce DFX clutch is equipped with the patented Centerforce centrifugal weight system, do not remove the ring, weights or retaining spring wire that attaches the weight system to the clutch diaphragm fingers. If your Centerforce DFX clutch does not include the centrifugal weight system, it is because there is not sufficient clearance for Centerforce to safely and effectively install the centrifugal weight system for your application. In these cases Centerforce has made other, internal modifications to improve the clutch holding capacity.

Aftermarket Hydraulic Release Bearings: When using an aftermarket hydraulic release bearing it is important to check for proper clearance between the bearing and the centrifugal weight system. Some aftermarket hydraulic bearings have an anti-rotator pin that may come into contact with the centrifugal weight system.

Due to its positive engagement characteristics, the Centerforce DFX clutch is designed primarily for competition use. However, DFX can also be used in high-powered street or dual-purpose vehicles with excellent results. Please be advised that the increased holding capacity of this clutch can contribute to clutch chatter and/or cause an audible noise during operation.

Failure to follow the above procedures will void your warranty and may result in decreased performance and/or premature wear!

CENTERFORCE® THE PERFORMANCE CLUTCH®

CENTERFORCE DUAL FRICTION®

"NOTE" Centerforce tip sheets are for general reference only. Please refer to your owners manual for vehicle specifications.

IMPORTANT

IMPORTANT

GM "LS" Engine Pilot bearing instructions

Enclosed you will find THREE GM pilot bearings with different OUTSIDE DIAMETERS. It is IMPERATIVE that you follow these instructions and install the correct pilot bearing for your application.

*** REFERENCE DRAWING BELOW ***

Pilot bearing for crankshaft position "A" is a SMALL outside diameter (1.094") GM pilot bearing that fits into the inner most pocket of the crankshaft flange. This bearing is typically (but, NOT ALWAYS) used with Transmission/Bell housings on GM; LS1 powered vehicles from 1998 to 2002. (NOTE: if using the small GM pilot bearing, the internal O-ring seal faces the transmission when installed properly).

Pilot bearing for crankshaft position "B" is a MEDIUM outside diameter (1.652") GM pilot bearing that fits into the outer pocket of the crankshaft flange. This bearing is typically (but, NOT ALWAYS) used with Transmission/Bell housings on GM; LS3, LSA, LSX and LS9 powered vehicles from 2003 to 2012. (NOTE: This is a double sealed bearing and it may be installed either direction into the crankshaft).

Oversize Pilot bearing for crankshaft position "B" is a LARGER outside diameter (1.705") GM pilot bearing that fits into the outer pocket of the crankshaft flange. This bearing can be used with SOME aftermarket crankshafts and/or GM CRATE engines where the crankshaft pilot bearing bore is oversized AND you are using a Transmission/Bell housing combination from a 2003 to 2012 GM vehicle. (NOTE: This is a double sealed bearing and it may be installed either direction into the crankshaft).

In most cases, you can dimensionally match the old pilot bearing to one of the new enclosed pilot bearings. (IMPORTANT NOTE: many GM LS engines use a press-in oil plug deep inside the crankshaft flange, DO NOT move or disturb this plug when removing or installing a pilot bearing. Your old pilot bearing must be removed by means of a mechanical pilot bearing puller – DO NOT attempt to use a "hydraulic" method to push-out or remove your old pilot bearing!).

The best method to determine the correct pilot bearing and pilot bearing position for your application is by using a straight edge or yard stick across the front of your transmission Bell housing and measure the distance that your transmission input shaft protrudes past the front of the Bell housing.

If your transmission input shaft dimension is between 3/4 to 1 inch (19mm to 25.4mm) use the SMALL diameter pilot bearing in crankshaft position (A) and disregard the remaining pilot bearings.

If your transmission input shaft dimension is between 1/4 to 3/8 inch (6.3mm to 9.5mm) test fit the MEDIUM outside diameter pilot bearing into crankshaft position (B). The pilot bearing should be a slight press fit into the crankshaft. If the MEDIUM diameter bearing is a loose fit, please use the LARGE outside diameter bearing for a slight press fit into the crankshaft.

Be sure to install your pilot bearing into the crankshaft by driving or pressing on the outer most part of the bearing ONLY. The pilot bearing must be straight and fully seated into the crankshaft… DO NOT FORCE the installation. Once installed, the inner portion of the bearing must spin free and smoothly.

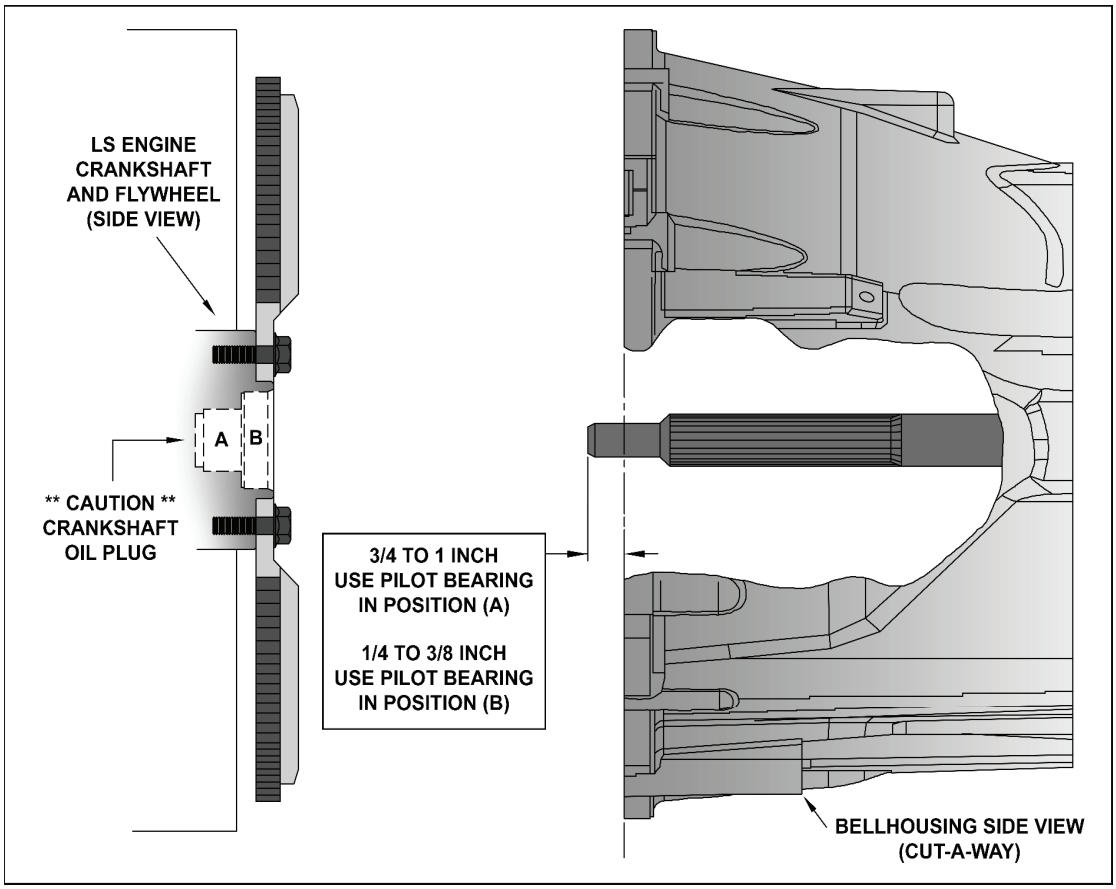

"NOTE"

Centerforce tip sheets are for general reference only. Please refer to your owners manual for vehicle specifications.

IMPORTANT

9" TWIN DISC DYAD DS CLUTCH INSTALLATION INSTRUCTIONS and TIPS:

Your new DYAD DS Twin Disc clutch set is like no other high-performance clutch on the market. Take a moment to read the ENTIRE enclosed instruction and specification sheets. Pay particular attention to the installed (or clutch "working") range dimensions contained on your specification sheet. This information will be needed to properly set your release bearing system for proper operation. Please keep the specification sheet and all DYAD DS clutch related paper work in a safe place for future reference. This is a high torque capacity clutch set – however, due to its small size, metal mass and therefore heat capacity is reduced when compared to a larger diameter clutch set. Heat caused by intentionally slipping the clutch (such as holding the vehicle on an incline or loading the vehicle on a trailer without the aid of a winch) will cause premature clutch wear and possible failure.
Note that your new DYAD DS twin disc clutch assembly has been precision balanced from the factory; this clutch set is ready to bolt-up and GO. During final assembly be sure the corresponding pressure plate and flywheel balance markings (located on the outer diameter of the clutch assembly) are all in alignment.

---

1. Carefully unpack your DYAD twin disc clutch system. Your new clutch assembly has been shipped from the factory exactly as it should be installed in your vehicle. Remove the NINE Socket Head Cap Screws and flat washers that retain the Clutch Pressure Plate to the flywheel assembly. DO NOT remove the THREE Socket Head Cap Screws (marked with a RED dot) that hold the starter ring gear to the flywheel (Note: The THREE ring gear retention screws have been secured with threadlocking compound from the factory – please DO NOT remove or further tighten these screws). Remove the Clutch Pressure Plate and the splined drive disc (Note: the starter ring gear, driven disc and floater plate will remain attached/contained within the flywheel assembly). It may be necessary to use a flat object to carefully pry the Clutch Pressure Plate off the flywheel assembly dowel pins.
2. Rotate the driven disc by hand so that the six drive slots align with the six flywheel to crankshaft bolt holes. Install the flywheel to your engine; USE ONLY the flywheel to crankshaft bolts supplied with this clutch assembly. Final torque the flywheel to crankshaft bolts to the supplied specifications.
3. Install the drive disc as marked ("Floater side" decal toward the floater plate, NOTE: the six disc drive pins will face toward the flywheel) and engage the six center drive pockets in the driven disc. Hold the drive disc in place and align with the enclosed disc alignment tool. Keep the disc alignment tool centered and in place until the clutch is Pressure Plate is fully bolted to the flywheel.
4. During assembly, be sure to align the RED balance index mark on the Pressure Plate to the RED balance index mark on the flywheel assembly.
5. Install the clutch Pressure Plate over the 3 dowel pins contained within the flywheel/ring gear assembly.
6. Install the NINE Socket Head Cap Screws and flat washers into the Clutch Pressure Plate/Flywheel assembly. Threadlocking compound may be used to secure the Pressure Plate screws to the flywheel if so desired. If using threadlocker, use only a SMALL amount of MEDIUM (blue) threadlocking compound. Tighten all NINE Pressure Plate Screws 1/4 turn at a time in a criss-cross pattern until the Pressure Plate is completely drawn-up to the flywheel assembly. Final torque all NINE Pressure Plate Screws to 25-28 ft/lbs.
7. Remove the disc alignment tool and install the transmission.

"NOTE"

Should you have questions or if you require further information in regards to your new Centerforce DYAD clutch system please contact our tech line below.