IMPORTANT

Please follow these instructions to maintain the warranty of your Centerforce® product!

Flywheels: All Centerforce® clutches need to be installed on a clean, properly resurfaced or brand new flywheel. Flywheels must be within original equipment specifications. Centerforce clutches are designed to be used on flywheels made of cast iron, steel, or aluminum with steel inserts.

Break-In: All Centerforce clutches require a break-in period of 450-500 miles of stop-and-go street driving before applying full engine power. This period is required to properly seat the disc with the pressure plate and flywheel.

Balance: All Centerforce clutches are balanced from the factory to meet or exceed Original Equipment (O.E.) specifications. Balancing with the Centerforce weights installed on the clutch assembly may cause an out-of-balance condition. Removing the weights without permission from Centerforce may void the warranty.

Centrifugal Weight System: If your new Centerforce clutch is equipped with the patented centrifugal weight system, do not remove the ring, weights, or spring wire retaining the weight system to the diaphragm fingers. If your Centerforce clutch does not include the centrifugal weight system, it is because there is not sufficient clearance for Centerforce to safely & effectively install the centrifugal weight system.

Aftermarket Hydraulic Release Bearings: When using an aftermarket hydraulic release bearing it is important to check for proper clearance between the bearing and the centrifugal weight system. Some aftermarket hydraulic bearings have an anti-rotator pin that may come into contact with the centrifugal weight system.

Failure to follow the above procedures will void your warranty and may result in decreased performance and/or premature wear!

Questions? Please contact the Tech Department at Centerforce

CENTERFORCE THE PERFORMANCE CLUTCH®

CENTERFORCE DUAL FRICTION®

"NOTE" Centerforce tip sheets are for general reference only. Please refer to your owners manual for vehicle specifications.

IMPORTANT

GENERAL BELLHOUSING ALIGNMENT INSTRUCTIONS

BELLHOUSING ALIGNMENT IS CRUCIAL FOR PROPER CLUTCH FUNCTION AND RELIABILITY OF THE RELATED COMPONENTS. DUE TO MANUFACTURING TOLERANCES OF ENGINE BLOCKS AND BELLHOUSINGS, IT IS POSSIBLE FOR THE TRANSMISSION CENTERLINE AND CRANKSHAFT CENTERLINE TO BE MISALIGNED. THE RESULT OF THIS MISALIGNMENT MAY BE HARD SHIFTING, PILOT BEARING WEAR, TRANSMISSION MAIN SHAFT BEARING WEAR AND FAILURE OF CLUTCH DISC HUB.

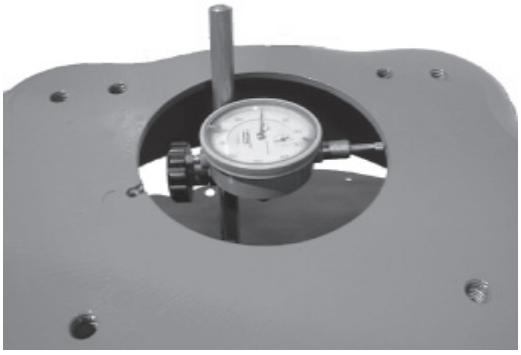

FIRST CHECK BELLHOUSING FOR BORE CONCENTRICITY. INSTALL MAGNETIC BASE TO FLYWHEEL OR PRESSURE PLATE, THEN INSTALL THE INDICATOR TO MEASURE THE BELLHOUSING BORE (SHOWN ABOVE). ROTATE THE CRANKSHAFT AND MARK DOWN THE INDICATOR READINGS (MARKING THE BELLHOUSING WORKS WELL). THE MAXIMUM OUT OF CONCENTRICITY IS .005".



NEXT, THE BELLHOUSING FACE SHOULD BE CHECKED FOR PARALLELISM TO THE BACK OF THE BLOCK. INSTALL THE INDICATOR (AS SHOWN ABOVE). ROTATE THE CRANKSHAFT AND MARK DOWN THE READINGS (BE SURE TO PUSH THE CRANKSHAFT AGAINST THRUST BEARING FOR ACCURATE MEASUREMENT). THE MAXIMUM OUT OF PARALLELISM IS .002"

NOTE: INSPECT BLOCK SURFACE AND BELLHOUSING FOR DENTS, BURRS, PAINT, DEBRIS, ETC. BEFORE INSTALLING AND CHECKING BELLHOUSING ALIGNMENT.

"NOTE" Centerforce tip sheets are for general reference only. Please refer to your owners manual for vehicle specifications.

CONTINUED ON THE BACK SIDE

CONTINUED

TO CORRECT OFF-CENTER CONDITION, SELECT THE OFFSET DOWEL PIN PAIR THAT IS CLOSEST TO ONE-HALF OF THE INDICATOR READING (I.E., IF READING IS .016", 1/2R=.008" USE .007" DOWELS. IF READING IS .024", 1/2R=.012" USE .014 DOWELS).

EXAMPLE

THE BELLHOUSING WAS OFFSET TOWARD TOP OF ENGINE AND SLIGHTLY TO THE LEFT (AS VIEWED FROM BEHIND). TO ALIGN THE BELLHOUSING, INSTALL TWO .014" OFFSET DOWEL PINS WITH THE MAXIMUM OFFSET POSITIONED ROUGHLY AT THE 5 O'CLOCK POSITION.

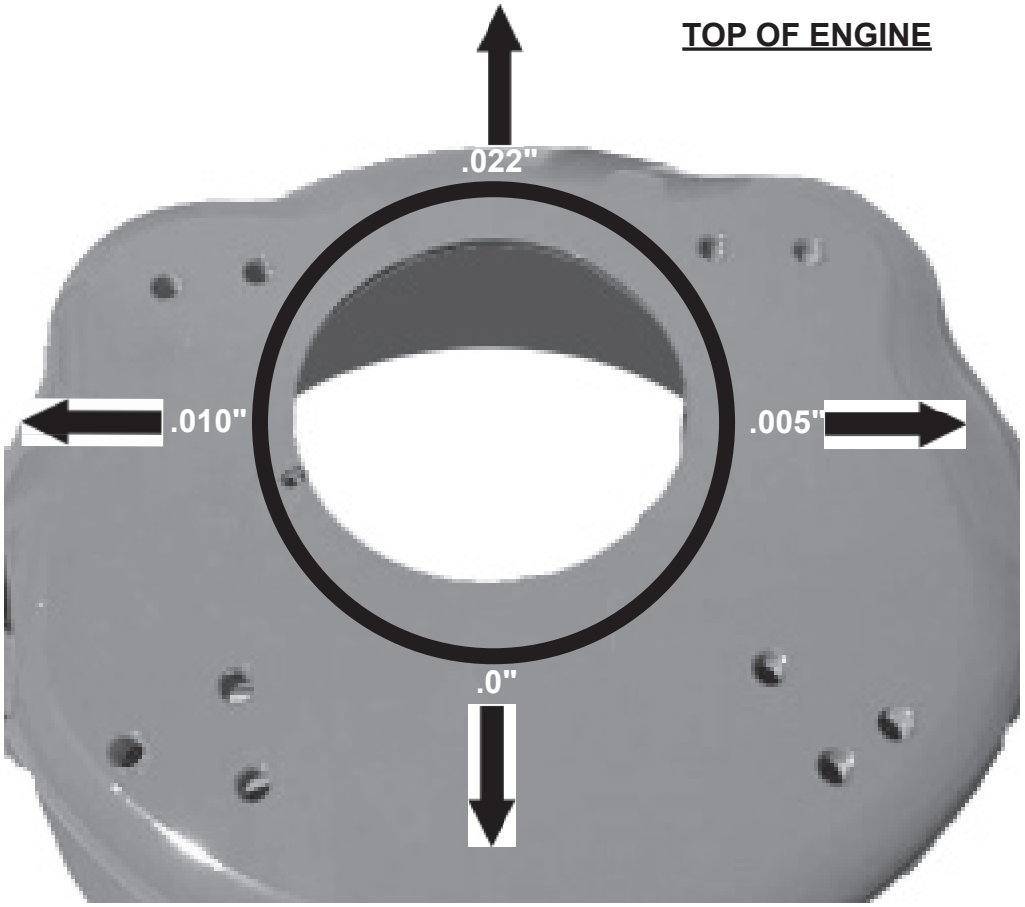

OFFSET DOWEL PIN CHART

TOTAL INDICATOR READING	ONE HALF TOTAL INDICATOR READING	SIZE DOWEL TO BE USED
.012" TO .020"	.006" TO .010"	.007"
.022" TO .034"	.011" TO .017"	.014"
.036" TO .052"	.018" TO .026"	.021"

	GM			FORD/CHRYSLER
	LAKEWOOD	MOROSO	TAVIA	LAKEWOOD
.007	15920	37934	02701	15950
.014	15930	37936	02702	15960
.021	15940	37938	02703	15970

IMPORTANT

DODGE, CHRYSLER & PLYMOUTH VEHICLES

WHEN REPLACING A COIL SPRING CLUTCH ASSEMBLY (3 FINGER TYPE) WITH A CENTERFORCE DIAPHRAGM TYPE PRESSURE PLATE, IT IS POSSIBLE FOR THE CLUTCH PEDAL TO STAY IN THE FULLY DEPRESSED POSITION DURING THE OPERATION OF THE CLUTCH PEDAL. THIS IS CAUSED DUE TO THE REDUCED PEDAL EFFORT REQUIRED TO OPERATE THE CENTERFORCE DIAPHRAGM TYPE PRESSURE PLATE.

THIS PROBLEM IS USUALLY CAUSED DUE TO THE PEDAL ASSIST/ OVER-CENTER SPRING INSTALLED BY THE VEHICLE MANUFACTURER DESIGNED TO REDUCE THE PEDAL EFFORT REQUIRED WITH THE O.E.M. (3 FINGER TYPE) CLUTCH SYSTEM VERSUS THE EFFORT CREATED BY THE NEW CENTERFORCE DIAPHRAGM STYLE PRESSURE PLATE.

TO FIX THIS PROBLEM, YOU MUST EITHER REMOVE THE PEDAL ASSIST SPRING FROM UNDER THE DASHBOARD OR ADD A HEAVY DUTY CLUTCH PEDAL RETURN SPRING.

CENTERFORCE® THE PERFORMANCE CLUTCH®

CENTERFORCE DUAL FRICTION®

"NOTE" Centerforce tip sheets are for general reference only. Please refer to your owners manual for vehicle specifications.

IMPORTANT