IMPORTANT

FOR ALL GENERAL MOTORS APPLICATIONS UTILIZING STAMPED STEEL THROW OUT BEARING ARMS (FORKS).

THE FORK SPRING CLIPS MUST BE INSTALLED BETWEEN THE THROWOUT BEARING COLLAR FLANGES. IF THE CLIPS ARE INSTALLED ABOVE THE TOP FLANGE AS SHOWN BELOW, PROPER ADJUSTMENT CANNOT BE MADE.

WE RECOMMEND THAT OUR THROW OUT BEARING PART NUMBER N1716 BE USED WHICH IS A SELF ALIGNING TYPE BEARING

NOTE: SELF ALIGNING TYPE THROWOUT BEARINGS WHEN REMOVED FROM THE BOX MAY APPEAR TO BE OFF CENTER, HOWEVER, THEY ARE NOT DEFECTIVE AND WILL PROPERLY ALIGN DURING USE.

CAUTION: IF YOUR VEHICLE IS EQUIPPED WITH A CAST IRON THROWOUT BEARING ARM, N1716 MAY WORK IF IT HAS A FORK GROOVE OF 0.503". IF THE GROOVE IS UNDERSIZED YOU WILL REQUIRE CENTERFORCE THROWOUT BEARING N1430.

CORRECT

INCORRECT

CENTERFORCE THE PERFORMANCE CLUTCH®

CENTERFORCE DUAL FRICTION®

"NOTE" Centerforce tip sheets are for general reference only. Please refer to your owners manual for vehicle specifications.

IMPORTANT

IMPORTANT

CHEVROLET, PONTIAC, OLDSMOBILE & BUICK V-8 ENGINES WITH MECHANICAL CLUTCH LINKAGE

To help achieve proper mechanical clutch linkage geometry, you will need to measure your flywheel deck height (distance from the flywheel crankshaft flange surface to the clutch friction surface) as shown in FIG. 1. Aftermarket flywheel variances and/or flywheel resurfacing may have reduced your flywheel deck height from the Original Equipment (O.E.) flywheel measurement of 0.960".

FIG. 1

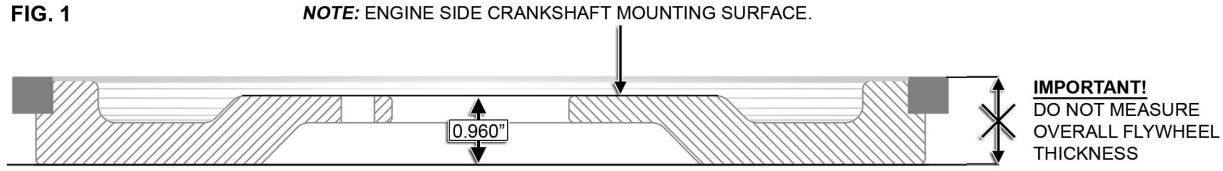

1. SET THE FLYWHEEL ON A FLAT SURFACE OR BENCH TOP WITH THE FRICTION SURFACE DOWN.
2. MEASURE DOWN THROUGH ONE OF THE CRANKSHAFT BOLT HOLES TO THE BENCH TOP.
3. RECORD AND SAVE THE FLYWHEEL DECK HEIGHT DIMENSION.

FIG 2 shows the O.E. clutch fork pivot ball height of 4.750" as measured from the engine block side of the Bellhousing plate (block saver) to the flat of the clutch fork pivot ball. If your flywheel deck height measures between 0.910" and 0.960", be sure your clutch fork pivot ball height is 4.750". If your flywheel deck height is less than 0.910" you will need to adjust the clutch fork pivot ball height to accommodate the thinner flywheel as follows:

Enter your flywheel Deck Height measurement here:_____ and SUBTRACT from 0.960" (O.E. standard flywheel deck height) = "Pivot ball adjustment distance".

Then: SUBTRACT "Pivot ball adjustment distance" from 4.750" (O.E. standard pivot ball height) to find the correct clutch fork pivot ball height.

EXAMPLE: a flywheel deck height of 0.850" SUBTRACT from 0.960" = 0.110"

Use an aftermarket adjustable pivot ball to move the clutch fork pivot ball 0.110" CLOSER to the engine:

0.110" SUBTRACT from 4.750" = 4.640" (adjust the clutch fork pivot ball height to 4.640" in this example.)

These dimensions are for mechanical clutch release systems using Centerforce P/N: N1716 release (O.E. type) bearing. For use with other release bearings and/or if you have questions, please contact or Technical Department at: (928) 771-8422.

FIG. 2

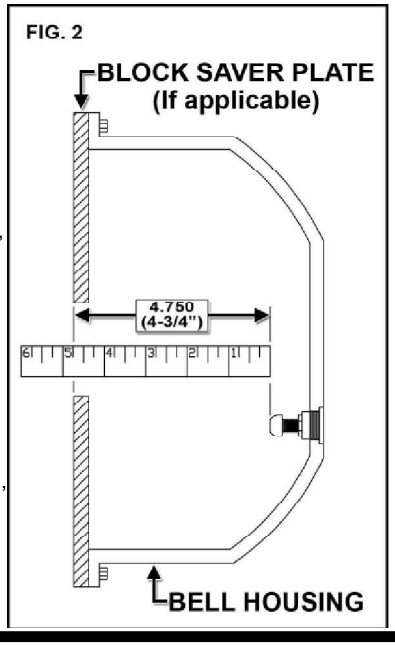

Notes:

1) If your flywheel deck height thickness is significantly below the O.E. specification, the clutch disc springs may contact the flywheel crankshaft bolts resulting in improper or failed clutch operation.

2) Centerforce DOES NOT recommend any shims/spacers or aftermarket balance plates to be used between the crankshaft and the flywheel.

PIVOT BALL REFERENCE INFORMATION

NON ADJUSTABLE	ADJUSTABLE PIVOT BALLS
GENERAL MOTORS	LAKEWOOD P/N: 15501
P/N 3790556 LONG 1.680"	MR GASKET P/N: 3855
P/N 3729000 SHORT 1.380"	McLEOD P/N: 16908

CONTINUED ON THE BACK SIDE

IMPORTANT

MECHANICAL CLUTCH LINKAGE GEOMETRY FINAL CHECK

Once the clutch assembly, release bearing, clutch fork and Bellhousing are bolted in place you can visually ensure the clutch fork ball stud is adjusted properly. Do not connect the remainder of the clutch linkage at this point. Move the clutch fork by hand until the release bearing contacts the clutch fingers. The outer end of the clutch fork should point towards the engine, ahead of the ball stud centerline as shown in FIG 3. If the outer end of the clutch fork is behind the ball stud centerline (pointing towards the transmission), your clutch linkage geometry is incorrect. Please re-visit the clutch fork pivot ball adjustment instructions or call the Centerforce Tech line at (928) 771-8422 for further assistance. Once the geometry is correct, connect the remainder of the clutch linkage and then adjust to where the clutch engagement point is approximately half-way up the pedal travel. Small adjustments can be made to suit individual driving preferences. Lastly, fully retract the release bearing away from the clutch fingers and visually check to ensure that you have at least 1/4" clutch wear allowance gap between the release bearing and the clutch fingers. Throughout the service life of your clutch, be sure to periodically check the wear allowance gap and adjust as needed. Caution! If the clutch engagement point is at or near the top of your clutch pedal travel – your clutch may be pre-loaded (release bearing too close or touching the clutch fingers). Continued operation with the clutch in a pre-loaded condition will void the warranty and cause poor performance as well as significant damage.

FIG. 3

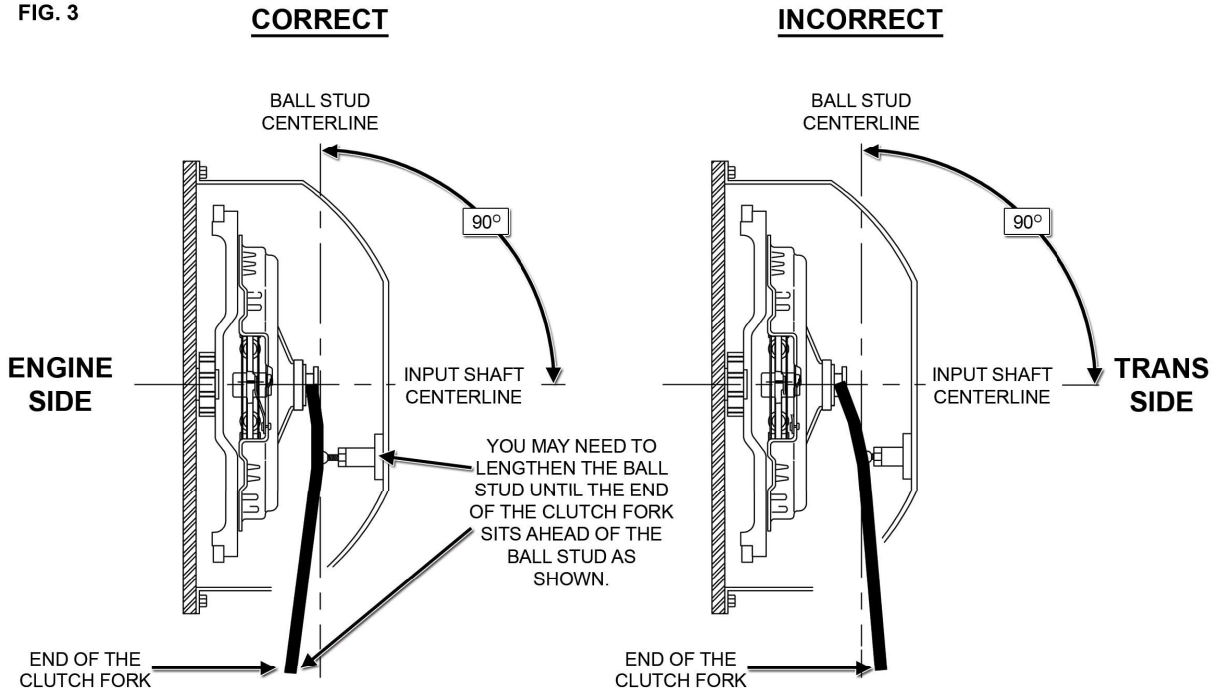

"NOTE" Centerforce tip sheets are for general reference only. Please refer to your owners manual for vehicle specifications.

IMPORTANT

Please follow these instructions to maintain the warranty of your Centerforce® product!

Flywheels: All Centerforce® clutches need to be installed on a clean, properly resurfaced or brand new flywheel. Flywheels must be within original equipment specifications. Centerforce clutches are designed to be used on flywheels made of cast iron, steel, or aluminum with steel inserts.

Break-In: All Centerforce clutches require a break-in period of 450-500 miles of stop-and-go street driving before applying full engine power. This period is required to properly seat the disc with the pressure plate and flywheel.

Balance: All Centerforce clutches are balanced from the factory to meet or exceed Original Equipment (O.E.) specifications. Balancing with the Centerforce weights installed on the clutch assembly may cause an out-of-balance condition. Removing the weights without permission from Centerforce may void the warranty.

Centrifugal Weight System: If your new Centerforce clutch is equipped with the patented centrifugal weight system, do not remove the ring, weights, or spring wire retaining the weight system to the diaphragm fingers. If your Centerforce clutch does not include the centrifugal weight system, it is because there is not sufficient clearance for Centerforce to safely & effectively install the centrifugal weight system.

Aftermarket Hydraulic Release Bearings: When using an aftermarket hydraulic release bearing it is important to check for proper clearance between the bearing and the centrifugal weight system. Some aftermarket hydraulic bearings have an anti-rotator pin that may come into contact with the centrifugal weight system.

Failure to follow the above procedures will void your warranty and may result in decreased performance and/or premature wear!

Questions? Please contact the Tech Department at Centerforce

CENTERFORCE® THE PERFORMANCE CLUTCH®

CENTERFORCE DUAL FRICTION®

"NOTE" Centerforce tip sheets are for general reference only. Please refer to your owners manual for vehicle specifications.

IMPORTANT

GENERAL BELLHOUSING ALIGNMENT INSTRUCTIONS

BELLHOUSING ALIGNMENT IS CRUCIAL FOR PROPER CLUTCH FUNCTION AND RELIABILITY OF THE RELATED COMPONENTS. DUE TO MANUFACTURING TOLERANCES OF ENGINE BLOCKS AND BELLHOUSINGS, IT IS POSSIBLE FOR THE TRANSMISSION CENTERLINE AND CRANKSHAFT CENTERLINE TO BE MISALIGNED. THE RESULT OF THIS MISALIGNMENT MAY BE HARD SHIFTING, PILOT BEARING WEAR, TRANSMISSION MAIN SHAFT BEARING WEAR AND FAILURE OF CLUTCH DISC HUB.

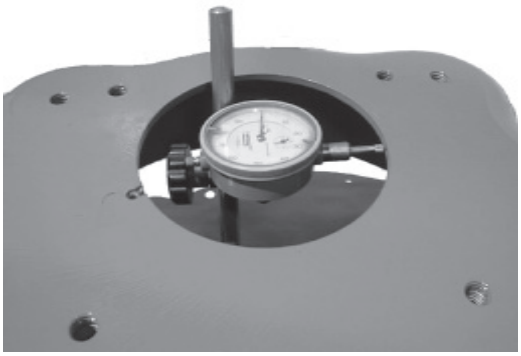

FIRST CHECK BELLHOUSING FOR BORE CONCENTRICITY. INSTALL MAGNETIC BASE TO FLYWHEEL OR PRESSURE PLATE, THEN INSTALL THE INDICATOR TO MEASURE THE BELLHOUSING BORE (SHOWN ABOVE). ROTATE THE CRANKSHAFT AND MARK DOWN THE INDICATOR READINGS (MARKING THE BELLHOUSING WORKS WELL). THE MAXIMUM OUT OF CONCENTRICITY IS .005".

NEXT, THE BELLHOUSING FACE SHOULD BE CHECKED FOR PARALLELISM TO THE BACK OF THE BLOCK. INSTALL THE INDICATOR (AS SHOWN ABOVE). ROTATE THE CRANKSHAFT AND MARK DOWN THE READINGS (BE SURE TO PUSH THE CRANKSHAFT AGAINST THRUST BEARING FOR ACCURATE MEASUREMENT). THE MAXIMUM OUT OF PARALLELISM IS .002"

NOTE: INSPECT BLOCK SURFACE AND BELLHOUSING FOR DENTS, BURRS, PAINT, DEBRIS, ETC. BEFORE INSTALLING AND CHECKING BELLHOUSING ALIGNMENT.

CENTERFORCE THE PERFORMANCE CLUTCH

CENTERFORCE DUAL FRICTION

"NOTE" Centerforce tip sheets are for general reference only. Please refer to your owners manual for vehicle specifications.

CONTINUED ON THE BACK SIDE

CONTINUED

TO CORRECT OFF-CENTER CONDITION, SELECT THE OFFSET DOWEL PIN PAIR THAT IS CLOSEST TO ONE-HALF OF THE INDICATOR READING (I.E., IF READING IS .016", 1/2R=.008" USE .007" DOWELS. IF READING IS .024", 1/2R=.012" USE .014 DOWELS).

EXAMPLE

THE BELLHOUSING WAS OFFSET TOWARD TOP OF ENGINE AND SLIGHTLY TO THE LEFT (AS VIEWED FROM BEHIND). TO ALIGN THE BELLHOUSING, INSTALL TWO .014" OFFSET DOWEL PINS WITH THE MAXIMUM OFFSET POSITIONED ROUGHLY AT THE 5 O'CLOCK POSITION.

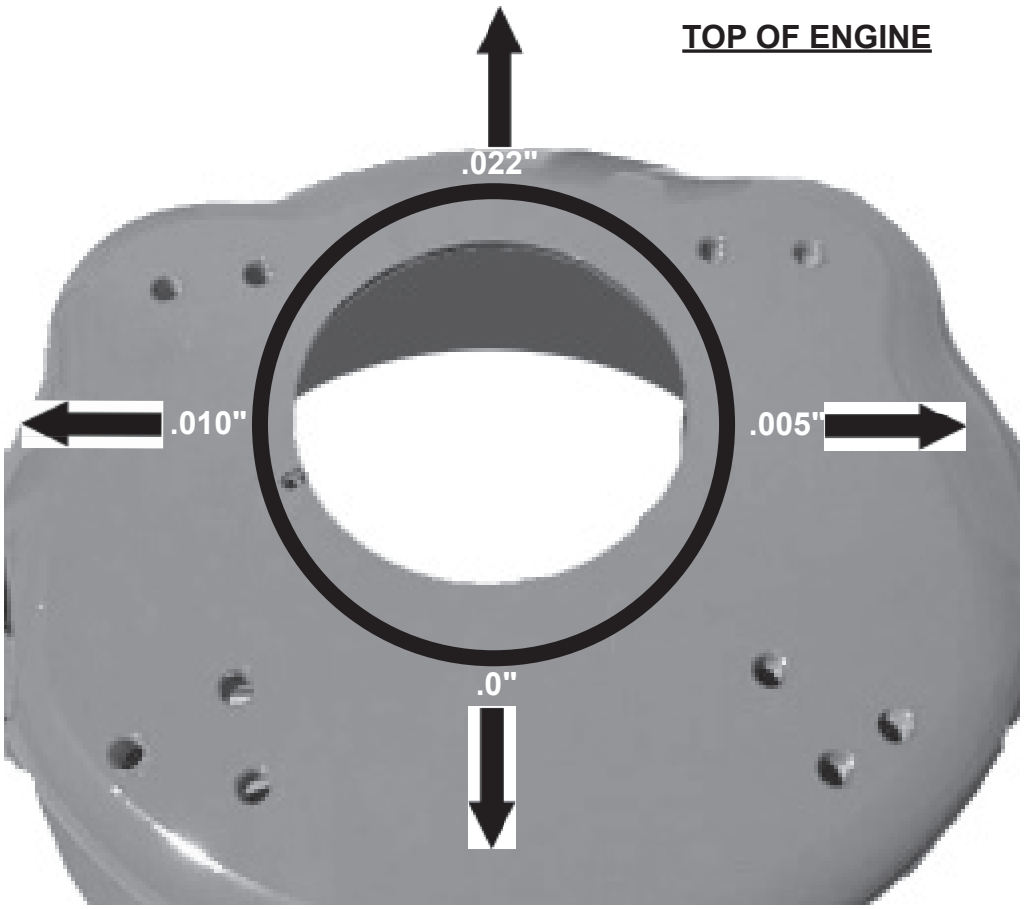

OFFSET DOWEL PIN CHART

TOTAL INDICATOR READING	ONE HALF TOTAL INDICATOR READING	SIZE DOWEL TO BE USED
.012" TO .020"	.006" TO .010"	.007"
.022" TO .034"	.011" TO .017"	.014"
.036" TO .052"	.018" TO .026"	.021"

	GM			FORD/CHRYSLER
	LAKEWOOD	MOROSO	TAVIA	LAKEWOOD
.007	15920	37934	02701	15950
.014	15930	37936	02702	15960
.021	15940	37938	02703	15970