Switching Theory

Chapter 3

Gate Level Minimization

Emad Felemban

Minimization

- $F = xyz + x'y + xyz'$
- How many Gates ? How many levels ?

Two-Variables K-Map

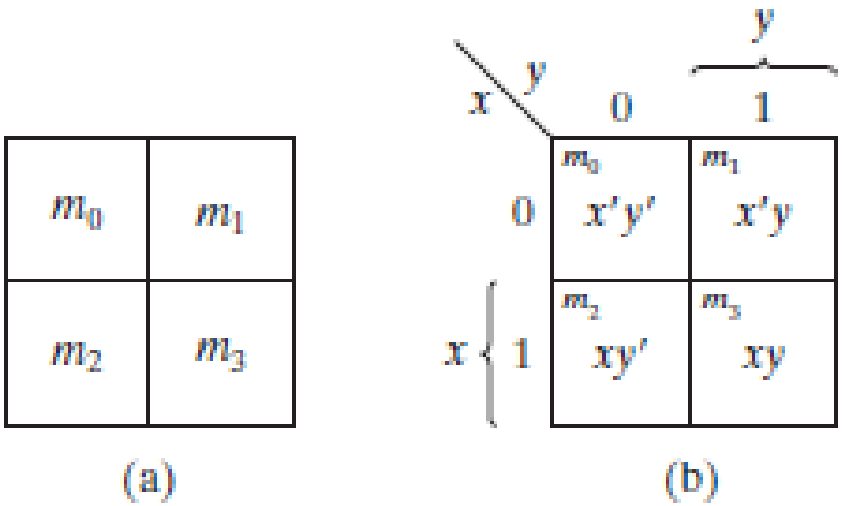

Two-Variables K-Map

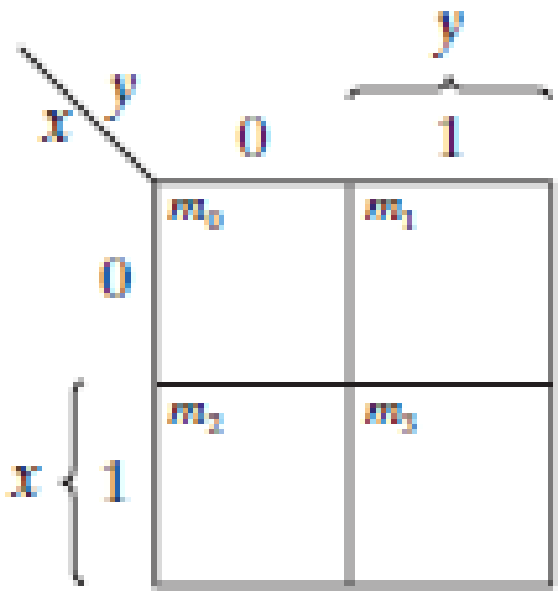

Three-Variables K-Map

m_0	m_1	m_3	m_2
m_4	m_5	m_7	m_6

(a)

$x \backslash yz$	00	01	11	10
0	m_0 $x'y'z'$	m_1 $x'y'z$	m_3 $x'yz$	m_2 $x'yz'$
1	m_4 $xy'z'$	m_5 $xy'z$	m_7 xyz	m_6 xyz'

(b)

Three-Variables K-Map

$x \backslash yz$	00	01	11	10
0	m_0	m_1	m_3	m_2
1	m_4	m_5	m_7	m_6

y

z

Four-Variables K-Map

m_0	m_1	m_3	m_2
m_4	m_5	m_7	m_6
m_{12}	m_{13}	m_{15}	m_{14}
m_8	m_9	m_{11}	m_{10}

(a)

$wx \backslash yz$	00	01	11	10
00	m_0 $w'x'y'z'$	m_1 $w'x'y'z$	m_3 $w'x'yz$	m_2 $w'x'yz'$
01	m_4 $w'xy'z'$	m_5 $w'xy'z$	m_7 $w'xyz$	m_6 $w'xyz'$
11	m_{12} $wxy'z'$	m_{13} $wxy'z$	m_{15} $wxyz$	m_{14} $wxyz'$
10	m_8 $wx'y'z'$	m_9 $wx'y'z$	m_{11} $wx'yz$	m_{10} $wx'yz'$

(b)

Four-Variables K-Map

$wx \backslash yz$	00	01	11	10
00	m_0	m_1	m_3	m_2
01	m_4	m_5	m_7	m_6
11	m_{12}	m_{13}	m_{15}	m_{14}
10	m_8	m_9	m_{11}	m_{10}

y x w z

Five-Variables K-Map

Don’t’ Care Condition

Prime Implicants

NAND and NOR Implmentaion

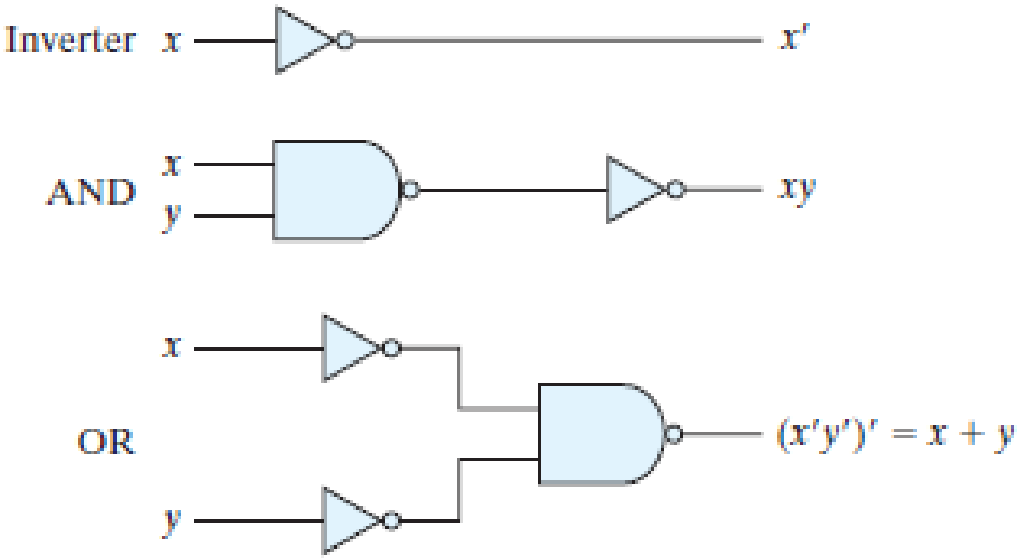

NAND and NOR Implmentaion

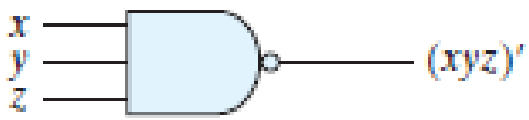

(a) AND-invert

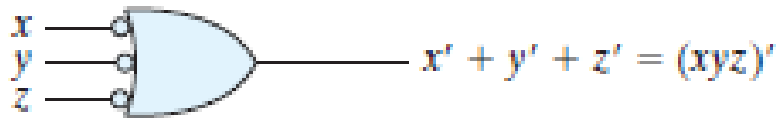

(b) Invert-OR

NAND and NOR Implmentaion

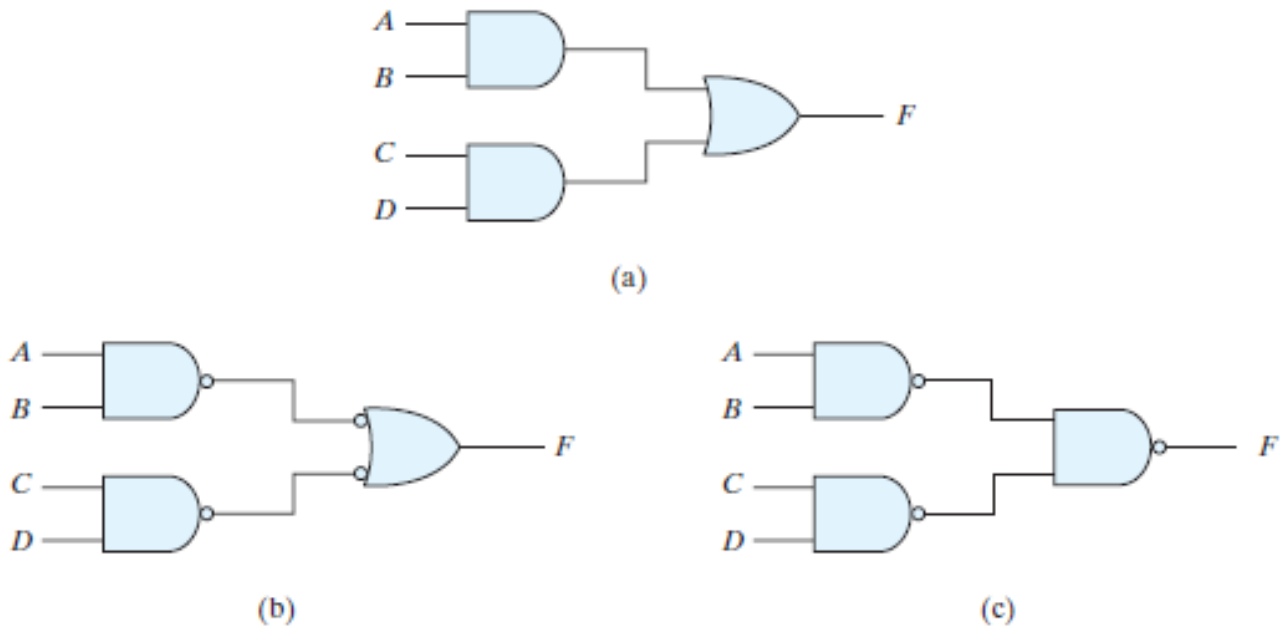

FIGURE 3.18
Three ways to Implement $F = AB + CD$

NAND and NOR Implmentaion

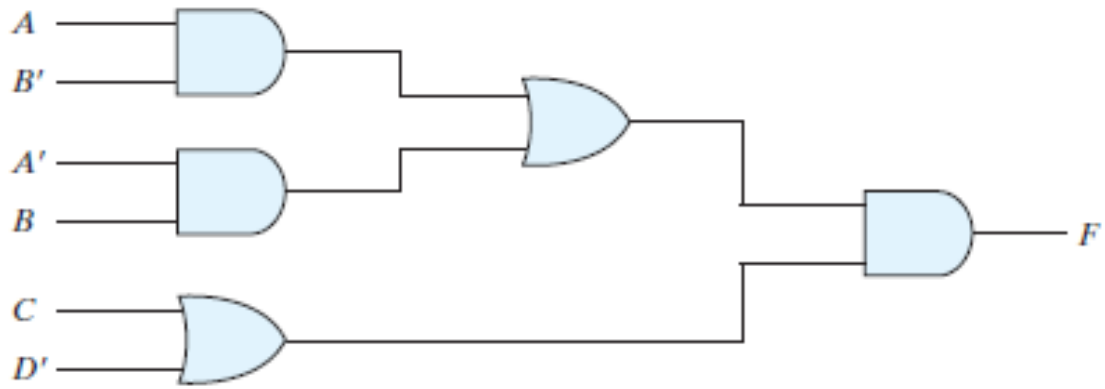

(a) AND–OR gates

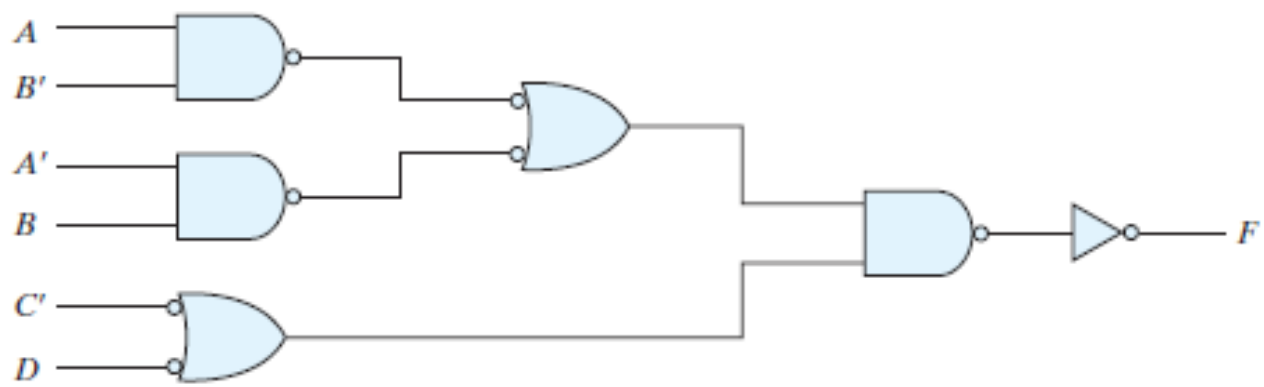

(b) NAND gates

Quiz

3.1
3.3
3.6
3.15
3.16
3.17