ACCENTRA®
ASSA ABLOY

Experience a safer
and more open world

8800 SERIES

ANSI/BHMA Grade 1 Certified Mortise Locks



TABLE OF CONTENTS

Contents

Benefits & Features 3-4
SL8800 4
How to Order 5
Finishes 6
Lever Trim 7-8
Reflections® Decorative Trim 9
Roses/Escutcheons 10
Knob Trim 11
Mechanical Functions 12-17
Indicators 18-23
Motorized Electric Latch Retraction 24
Electrified Mortise Locksets 25
Electrified Mortise Lockset Functions 26-27
Electrified Mortise Lockset Accessories 28
Cylinders 29-31
Cylinder Collars 32-39
Strikes 40
Thumbturns 41
Miscellaneous 42
Handing 43
Dimensions and Exploded Views 44
Installations 45
Technical Specifications & Listings 46

8800 Series Mortise Locks

ASSA ABLOY ACCENTRA® 8800 Series Mortise Locks are designed and manufactured for uncompromising strength and durability in a range of commercial applications. Lock installation is made easy with quick lever handing, field reversible latchbolt and standard non-handed strike. Once installed, the 8800 Series Mortise Lock offers a new measure of security, featuring a reinforced stainless steel deadbolt, heavy-duty, vandal-resistant trim and ANSI/BHMA Grade 1 certification for long life and durability. The 8800 Series Mortise Lock is even backed by a 10 year mechanical warranty, making this product completely worry-free.

⚠ WARNING

This product can expose you to lead which is known to the state of California to cause cancer and birth defects or other reproductive harm. For more information go to www.P65warnings.ca.gov.

Copyright © 2004-2026, ASSA ABLOY Access and Egress Hardware Group, Inc. All rights reserved. Reproduction in whole or in part without the express written permission of ASSA ABLOY Access and Egress Hardware Group, Inc. is prohibited. Patent pending and/or patent www.assaabloydss.com/patents.

BENEFITS & FEATURES



Copyright © 2004-2026, ASSA ABLOY Access and Egress Hardware Group, Inc. All rights reserved. Reproduction in whole or in part without the express written permission of ASSA ABLOY Access and Egress Hardware Group, Inc. is prohibited. Patent pending and/or patent www.assaabloydss.com/patents.

Features

- UL Cycle above and beyond test completed at 12.3 Million Cycles. Verification ID: V572228
- Heavy-duty trim for resistance against damage and vandalism
- Functions available for any industrial or commercial application
- Field adjustable lever handing and latchbolt
- ANSI/BHMA Certified Grade 1 for long-life and durability
- UL/cUL listed for 3 hour fire rated doors
- 10 year mechanical warranty
- Available in a variety of attractive trims and finishes
- Status indicator options available to provide peace of mind on the locked/unlocked status of a door



Escutcheon Trim



Rose/Sectional Trim

Applications

- Offices
- Shopping centers
- Industrial buildings
- Commercial facilities

Specifications

Armor Front	8" x 1-1/4"
Backset	2-3/4" only
Case	Wrought steel, zinc dichromated
Deadbolt	1" throw, cast stainless steel.
Door Thickness	1-3/4" standard, available for up to 3-1/4" thick doors
Handing	Field reversible
Hubs	3/8" solid steel, fine-blanked and heat treated for additional strength
Latchbolt	3/4" throw, stainless steel one-piece anti-friction
Strike	1-1/4" (model 2815) curved lip strike standard, see page 40 for additional options.

SL8800

For more heavy-duty applications, the SL8800 Series Mortise Lock offers an extra measure of security. The SL8800 is ideal for situations where heavy abuse or vandalism might be a concern. The SL8800 is available in most mortise lock functions; please see pages 12-17 for more information. 630 finish only.



Available with the following lever designs: AR, AU, CR, JN, MO, PB, VI

Features

- Heavy duty escutcheon trim that is flat against the door to resist damage and vandalism
- Lever attached directly to escutcheon for added security
- Thrubolted security head screws offer added protection

Applications

- Schools
- Minimum security prisons
- High crime areas

Copyright © 2004-2026, ASSA ABLOY Access and Egress Hardware Group, Inc. All rights reserved. Reproduction in whole or in part without the express written permission of ASSA ABLOY Access and Egress Hardware Group, Inc. is prohibited. Patent pending and/or patent www.assaabloydss.com/patents.

HOW TO ORDER

Trim Design	Lock Series/ Function	Cylinder	Hand	Door Thickness	Finish	Highest Keying Level	Supplementary Specifications/Options Please add to end of order string.
See pages 7-11	See pages 12-17	2153 cylinder standard, see pages 29-31 for additional options. If other than the standard cylinder is required, please specify by model number.	RH LH	1-3/4" standard, please specify if different door thickness required	See page 6 YMS = MicroShield®	"Level One" - KA or KD "Level Two" - MK "Level Three" - GM "Level Four" - GGM	• MELR (see page 24) • Lead lined (see page 46) • Knurled (see page 46) • Abrasive coated • Specific keying • 7-pin cylinders (see page 29) • Specific strike requirements, i.e. special lip length, curved, open back (see page 40) • For split finishes, please specify in detail. Indicate outside finish first regardless of hand of door. For RHR and LHR doors indicate the finish desired for front and strike.

Ordering Example

AU x CN x 8807FL x 2153 x RH x 1-3/4" x 626 x GM

Copyright © 2004-2026, ASSA ABLOY Access and Egress Hardware Group, Inc. All rights reserved. Reproduction in whole or in part without the express written permission of ASSA ABLOY Access and Egress Hardware Group, Inc. is prohibited.
Patent pending and/or patent www.assaabloydss.com/patents.

FINISHES

The 8800 Series Mortise Lock is available in the finishes below. All knobs, lever handles, roses, escutcheons, cylinder collars and other exposed parts are fabricated of either brass, stainless steel or zinc and will be compatible with the finish ordered. When ordering, specify the finish required by the ANSI/BHMA Code Number only. When locksets are ordered with different trim finishes on each side, specify the outside finish first, i.e. AUR8817-2 x 612 x 625. The front and strike finish will match the inside finish unless specified otherwise.

ANSI/BHMA Code Finish Description				
605 **Bright Brass,** **Clear Coated**	**606** **Satin Brass,** **Clear Coated**	**611** **Bright Bronze,** **Clear Coated**	**612** **Satin Bronze,** **Clear Coated**	**613E** **Dark Oxidized Satin** **Bronze - equivalent**
		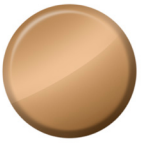		
618 **Bright Nickel Plated,** **Clear Coated**	**619*** **Satin Nickel Plated,** **Clear Coated**	**625** **Bright Chrome Plated**	**626*** **Satin Chrome Plated**	**629** **Bright Stainless Steel**
			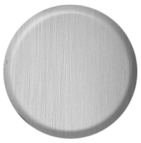	
630* **Satin Stainless Steel**	**693** **Black Painted**	**BSP** **Black Suede Powder Coat**	**WSP** **White Suede Powder Coat**	
				

Notes:

HA lever available in only the following finishes: 605, 606, 619, 625, 626.

SL escutcheon trim available in 630 finish only.

Reflections® decorative levers are NOT available in the following finish: 693.

*Finish available with MicroShield® antimicrobial coating, additional finishes by special application. Consult factory for availability.

MicroShield coating may vary finish color from architectural standards. MicroShield is not intended as a substitute for traditional infection control programs such as hand hygiene or use of disinfectants. Coated products must still be cleaned to ensure the surfaces will be free of destructive microbes. ASSA ABLOY ACCENTRA® makes no representations or warranties, express or implied, as to the efficacy of MicroShield.

Copyright © 2004-2026, ASSA ABLOY Access and Egress Hardware Group, Inc. All rights reserved. Reproduction in whole or in part without the express written permission of ASSA ABLOY Access and Egress Hardware Group, Inc. is prohibited. Patent pending and/or patent www.assaabloydss.com/patents.

LEVER TRIM

Standard Rose

Lever Handle: Cast
CO Rose**: Stamped
Cylinder Collar: See pages 32-39

Arcadia - ARR*

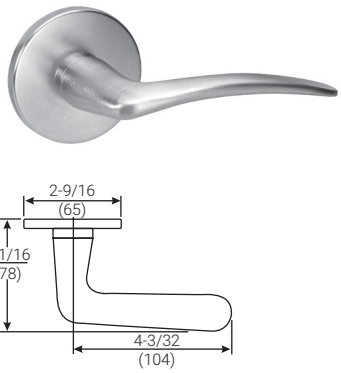

Augusta - AUR

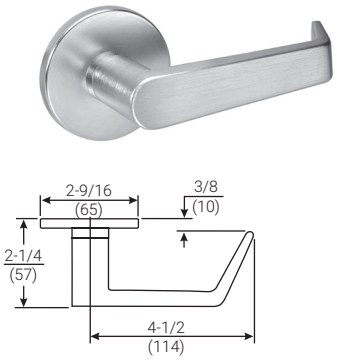

Carmel - CRR

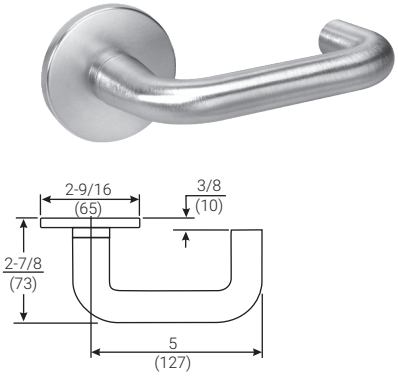

Jefferson - JNR

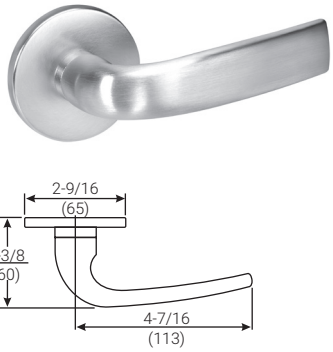

Monroe - MOR

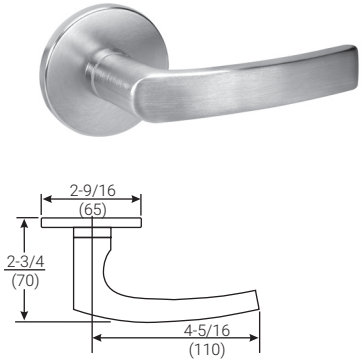

Pacific Beach - PBR

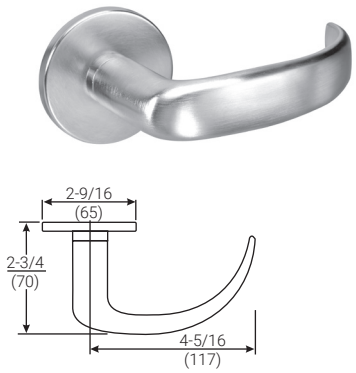

Pinehurst - PNR

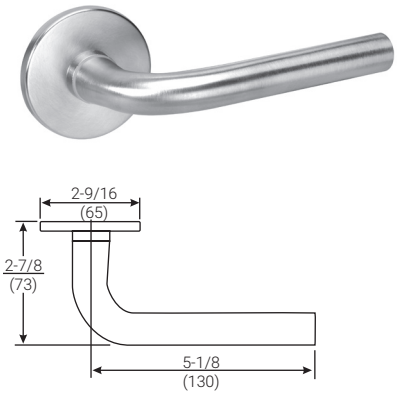

Virginia - VIR

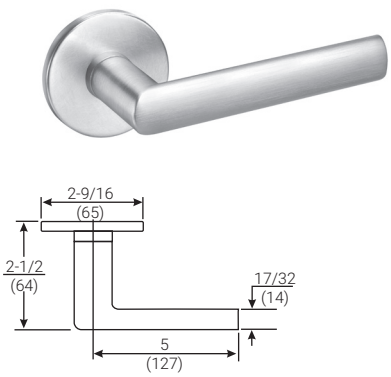

Hampton - HAR

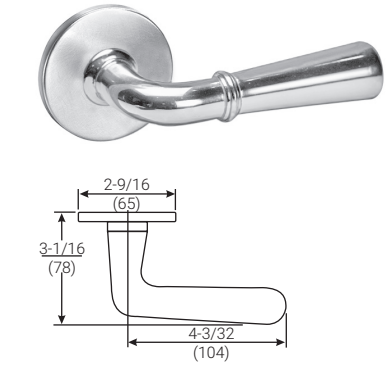

*Indicates levers that are handed.
**Lever also available with Reflections® roses. See page 10 for options.

Copyright © 2004-2026, ASSA ABLOY Access and Egress Hardware Group, Inc. All rights reserved. Reproduction in whole or in part without the express written permission of ASSA ABLOY Access and Egress Hardware Group, Inc. is prohibited.
Patent pending and/or patent www.assaabloydss.com/patents.

LEVER TRIM

Standard Escutcheon

Lever Handle: Cast
CN Escutcheon**: Cast
Cylinder Collar: See pages 32-39

Arcadia – ARCN*

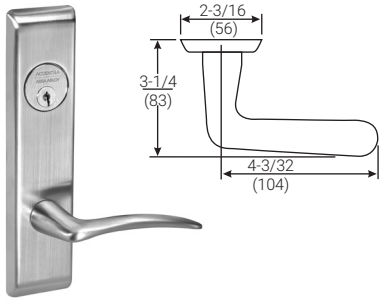

Augusta – AUCN

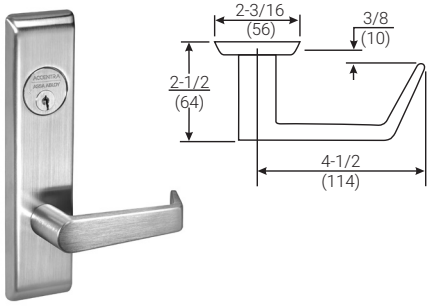

Carmel – CRCN

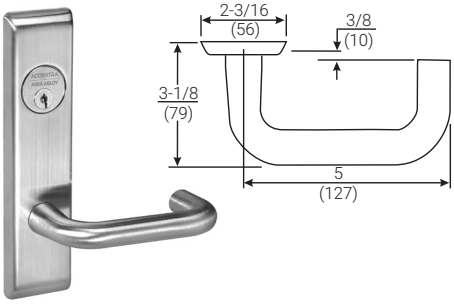

Jefferson – JNCN

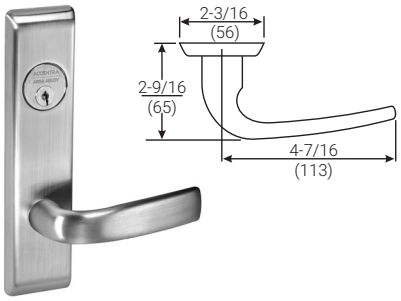

Monroe – MOCN

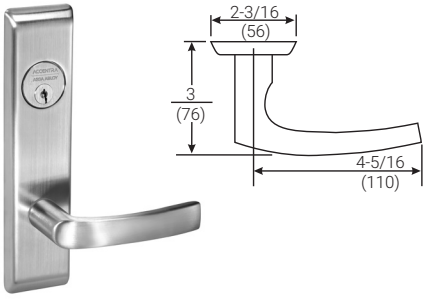

Pacific Beach – PBCN

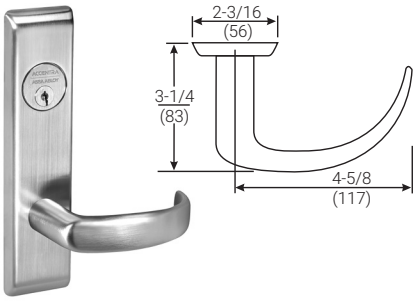

Pinehurst – PNCN

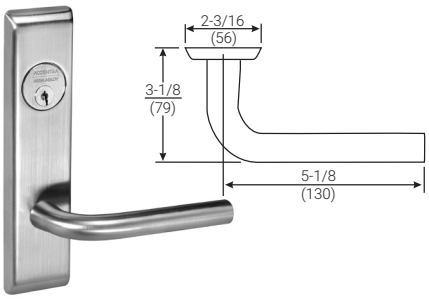

Virginia – VICN

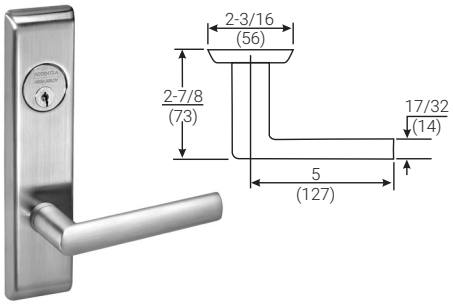

Hampton - HACN

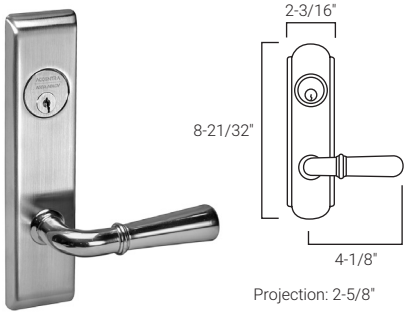

*Indicates levers that are handed.
**Lever also available with Reflections® escutcheons. See page 10 for options.
For SL escutcheon trim, specify design x SL. i.e. ARSL. Available with all designs except PN & HA.

Copyright © 2004-2026, ASSA ABLOY Access and Egress Hardware Group, Inc. All rights reserved. Reproduction in whole or in part without the express written permission of ASSA ABLOY Access and Egress Hardware Group, Inc. is prohibited. Patent pending and/or patent www.assaabloydss.com/patents.

REFLECTIONS® DECORATIVE TRIM

8800RL Mortise Locks are available with Reflections lever trim, a comprehensive line of highly stylized lever handles. Reflections lever handles are made from solid brass or stainless steel and can withstand years of abuse. Available in an array of finishes, these levers complement any wood grain or other door exterior. Each lever is hand-polished and specially designed for ergonomics and style.

Hudson	Spree	Seine	Thames	Victoria	Niagara
TB 	RS 	TE 	TM 	TT* 	CH* 
UB 	RT 	TG* 	TN 	TU* 	DW 
TC 	RU 	TI 	TP 	TW* 	MA* 
TD 	RV 	TJ* 	TR 	TX* 	RA* 
UC 		TK* 	TS 	UX* 	RB* 
		GT 	TQ 	TY* 	RC* 
				WG* 	

*Indicates levers that are handed.

Note: The following Reflections levers are not available in 629 or 630 finish: Hudson TD; Seine TE, TG, TI, TJ, TK; Victoria TT, TU, TW, TX, TY, UX; Niagara CH, DW, MA, RA, RB, RC. Please consider the 618 or 619 finish as an alternative. Reflections levers are not available with knurling option.

Copyright © 2004-2026, ASSA ABLOY Access and Egress Hardware Group, Inc. All rights reserved. Reproduction in whole or in part without the express written permission of ASSA ABLOY Access and Egress Hardware Group, Inc. is prohibited. Patent pending and/or patent www.assaabloydss.com/patents.

ROSES/ESCUTCHEONS

Roses

R3

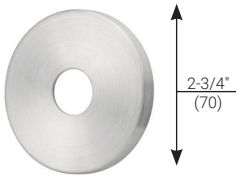

R4

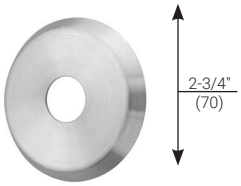

R5

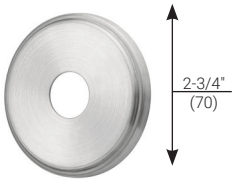

R6

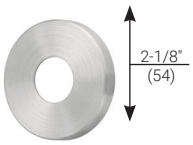

R7

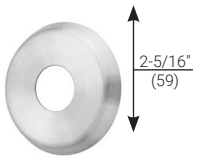

R8

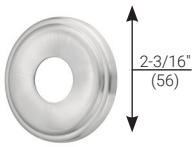

R9

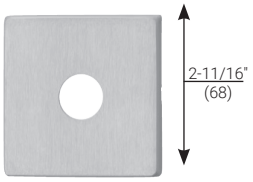

CO

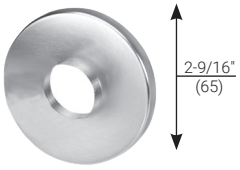

Escutcheons

CN

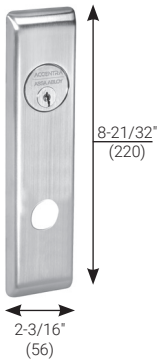

E3

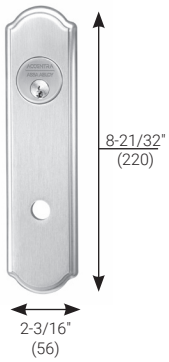

E4



Note: All rose and escutcheon options are available with any standard or Reflections® lever design.

Copyright © 2004-2026, ASSA ABLOY Access and Egress Hardware Group, Inc. All rights reserved. Reproduction in whole or in part without the express written permission of ASSA ABLOY Access and Egress Hardware Group, Inc. is prohibited. Patent pending and/or patent www.assaabloydss.com/patents.

KNOB TRIM

Standard Rose

Copenhagen - COR

CO Knob: Cast
CO Rose[1]: Stamped
Cylinder Collar: See pages 32-39



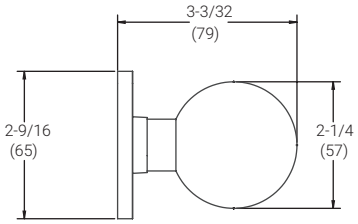

Standard Escutcheon

Copenhagen – CO X CN

CO Knob: Cast
CN Escutcheon[1]: Cast
Cylinder Collar: See pages 32-39



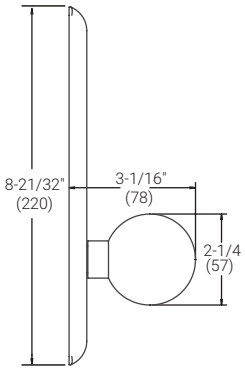

1. Available with Reflections® rose or escutcheon. See page 10 for options.

Copyright © 2004-2026, ASSA ABLOY Access and Egress Hardware Group, Inc. All rights reserved. Reproduction in whole or in part without the express written permission of ASSA ABLOY Access and Egress Hardware Group, Inc. is prohibited.
Patent pending and/or patent www.assaabloydss.com/patents.

MECHANICAL FUNCTIONS

8801 Passage Or Closet Latch (F01)

- For doors that do not require locking
- Latchbolt retracted by knob/lever either side at all times

Trim	Model Numbers		Latchbolt Throw
	Knobs	Levers	
Standard	8801K	8801FL	3/4"
SL	—	SL8801FL	3/4"
Reflections®	—	8801RL	3/4"

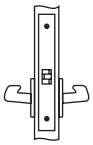

8802 Privacy, Bedroom Or Bath Lock (F19)

- Latchbolt retracted by knob/lever either side
- Deadbolt operated by thumbturn inside
- When the deadbolt is projected, outside knob/lever is automatically locked
- Anti-panic operation. Operating inside knob/lever retracts the latchbolt and deadbolt simultaneously, automatically unlocking outside knob/lever.
- In emergency, deadbolt may be unlocked from outside by E203 emergency key, supplied

Trim	Model Numbers		Throw	
	Knobs	Levers	Latchbolt	Deadbolt
Standard	8802K	8802FL	3/4"	1"
SL	—	SL8802FL	3/4"	1"
Reflections®	—	8802RL	3/4"	1"

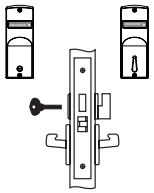

8805 Storeroom Or Closet Lock (F07)

- For use on storeroom, utility, exit doors
- Latchbolt retracted by key outside, knob/lever inside
- Outside knob/lever rigid at all times
- Inside knob/lever always active
- Deadlocking latchbolt

Trim	Model Numbers		Latchbolt Throw
	Knobs	Levers	
Standard	8805K	8805FL	3/4"
SL	—	SL8805FL	3/4"
Reflections®	—	8805RL	3/4"

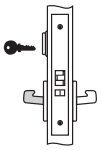

8807 Entry Lock (F04)

- For office doors where locking is required
- Latchbolt retracted by knob/lever either side, except when outside knob/lever is locked by stopwork activator
- When outside knob/lever is locked, latchbolt is operated by key outside and knob/lever inside
- Deadlocking latchbolt

Trim	Model Numbers		Latchbolt Throw
	Knobs	Levers	
Standard	8807K	8807FL	3/4"
SL	—	SL8807FL	3/4"
Reflections®	—	8807RL	3/4"

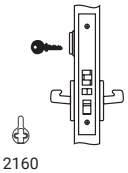

8808 Classroom Lock (F05)

- For classroom, office, or utility room doors
- Latchbolt retracted by knob/lever either side, except when outside knob/lever is locked by key
- Inside knob/lever always active
- Latchbolt can be retracted by key when outside knob/lever is locked
- Operating inside knob/lever retracts latchbolt, but outside knob/lever remains locked
- Deadlocking latchbolt

Trim	Model Numbers		Latchbolt Throw
	Knobs	Levers	
Standard	8808K	8808FL	3/4"
SL	—	SL8808FL	3/4"
Reflections®	—	8808RL	3/4"

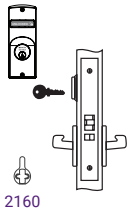

8808-2 Intruder Latchbolt Lock (F32)

- Latchbolt retracted by knob/lever either side unless outside knob/lever is locked by key
- Either cylinder locks or unlocks outside knob/lever
- Latchbolt can be retracted by key when outside knob/lever is locked
- Operating inside knob/lever retracts latchbolt, but outside knob/lever remains locked
- Deadlocking latchbolt

Trim	Model Numbers		Latchbolt Throw
	Knobs	Levers	
Standard	8808-2K	8808-2FL	3/4"
SL	—	SL8808-2FL	3/4"
Reflections®	—	8808-2RL	3/4"

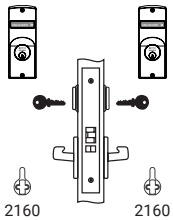

8809 Classroom Or Office Lock

- Latchbolt retracted by knob/lever either side unless outside knob/lever is locked by key outside or thumbturn inside
- Latchbolt retracted by thumbturn inside or key outside
- Inside knob/lever always active
- Deadlocking latchbolt

Trim	Model Numbers		Latchbolt Throw
	Knobs	Levers	
Standard	8809K	8809FL	3/4"
SL	—	SL8809FL	3/4"
Reflections®	—	8809RL	3/4"

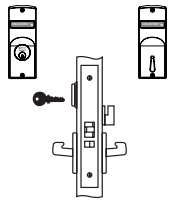

8811-2 Intruder Deadbolt Lock (F33)

- Latchbolt retracted by knob/lever either side unless outside knob/lever is locked by key
- Deadbolt operated by key either side
- When deadbolt is projected, outside knob/lever is automatically locked
- Key retraction of deadbolt unlocks outside knob/lever
- Anti-panic operation. Operating inside knob/lever retracts the latchbolt and deadbolt simultaneously, automatically unlocking outside knob/lever.

Trim	Model Numbers		Throw	
	Knobs	Levers	Latchbolt	Deadbolt
Standard	8811-2K	8811-2FL	3/4"	1"
SL	—	SL8811-2FL	3/4"	1"
Reflections®	—	8811-2RL	3/4"	1"

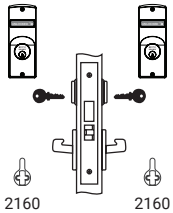

Indicator options available for both sectional and escutcheon trim.

Cylinder cam required.

Indicates rigid knob/lever.

Copyright © 2004-2026, ASSA ABLOY Access and Egress Hardware Group, Inc. All rights reserved. Reproduction in whole or in part without the express written permission of ASSA ABLOY Access and Egress Hardware Group, Inc. is prohibited. Patent pending and/or patent www.assaabloydss.com/patents.

MECHANICAL FUNCTIONS

8812-2 Intruder Deadbolt Lock (F34)

- Latchbolt retracted by knob/lever either side unless outside knob/lever is locked by key
- Deadbolt operated by key either side
- When deadbolt is projected, outside knob/lever is automatically locked
- Key retraction of deadbolt unlocks outside knob/lever
- Anti-panic operation. Operating inside knob/lever retracts the latchbolt and deadbolt simultaneously, automatically unlocking outside knob/lever.
- Deadlocking latchbolt

Trim	Model Numbers		Throw	
	Knobs	Levers	Latchbolt	Deadbolt
Standard	8812-2K	8812-2FL	3/4"	1"
SL	—	SL8812-2FL	3/4"	1"
Reflections®	—	8812-2RL	3/4"	1"

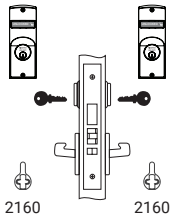

8813ST Classroom Deadlock (F29)

- Deadbolt operated by key outside, thumbturn inside
- Thumbturn inside will retract the deadbolt but will not project it
- Not available with E3 or E4 escutcheons

Model Number	Deadbolt Throw
8813ST	1"

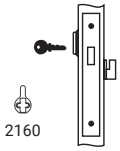

8813ST-2 Classroom Deadlock

- Deadbolt operated by key either side
- Thumbturn inside will retract the deadbolt but will not project it
- Not available with E3 or E4 escutcheons

Model Number	Deadbolt Throw
8813ST-2	1"

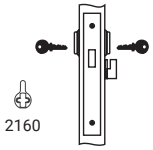

8814 Deadlock (F18)

- Deadbolt operated by key outside only
- No inside operation
- Not available with E3 or E4 escutcheons

Note: Indicators available for sectional trim only

Model Number	Deadbolt Throw
8814K	1"

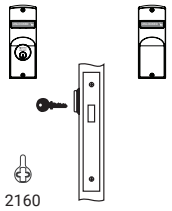

8814-2 Deadlock (F16)

- Deadbolt operated by key either side
- Not available with E3 or E4 escutcheons

Note: Use only on rooms with more than one exit
Indicators available for sectional trim only

Model Number	Deadbolt Throw
8814-2K	1"

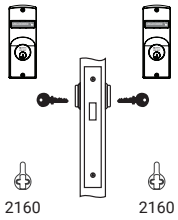

8815 Deadlock (F17)

- Deadbolt operated by key outside, thumbturn inside
- Not available with E3 or E4 escutcheons

Note: Indicators available for sectional trim only

Model Number	Deadbolt Throw
8815K	1"

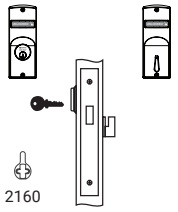

8817-2 Apartment, Exit Or Public Toilet Lock (F09)

- Latchbolt retracted by knob/lever either side, except when outside knob/lever is locked by key inside
- When outside knob/lever is locked, latchbolt is operated by key outside and knob/lever inside
- Deadlocking latchbolt

Trim	Model Numbers		Latchbolt Throw
	Knobs	Levers	
Standard	8817-2K	8817-2FL	3/4"
SL	—	SL8817-2FL	3/4"
Reflections®	—	8817-2RL	3/4"

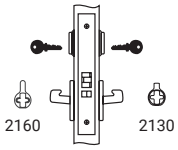

8818-2 Classroom Security Intruder Lock

- Latchbolt retracted by knob/lever unless outside knob/lever is locked by key
- Deadbolt operated by key either side
- When deadbolt is projected, outside knob/lever is automatically locked
- Key retraction of latchbolt by either side unlocks outside knob/lever
- Anti-panic operation. Operating inside knob/lever retracts the latchbolt and deadbolt simultaneously, **with outside knob/lever remaining locked.**
- Deadlocking latchbolt

Note: Indicator shows deadbolt position only

Trim	Model Numbers		Throw	
	Knobs	Levers	Latchbolt	Deadbolt
Standard	8818-2K	8818-2FL	3/4"	1"
SL	—	SL8818-2FL	3/4"	1"
Reflections®	—	8818-2RL	3/4"	1"

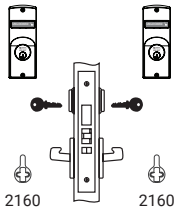

Indicator options available for both sectional and escutcheon trim.

Cylinder cam required.

Indicates rigid knob/lever.

Copyright © 2004-2026, ASSA ABLOY Access and Egress Hardware Group, Inc. All rights reserved. Reproduction in whole or in part without the express written permission of ASSA ABLOY Access and Egress Hardware Group, Inc. is prohibited.
Patent pending and/or patent www.assaabloydss.com/patents.

MECHANICAL FUNCTIONS

8820 Hotel Guest Lock (F15)

- Latchbolt retracted by key outside, knob/lever inside
- Latchbolt retracted by master keys and change keys only when deadbolt is NOT projected
- Deadbolt operated by emergency/shut-out or display key outside and thumbturn inside
- When deadbolt is projected, the indicator shows red with a locked padlock icon (indicating room is occupied). Access from outside can be gained only with an emergency/shut-out or display key.
- Outside knob/lever rigid at all times
- Anti-panic operation. Operating inside knob/lever retracts the latchbolt and deadbolt simultaneously
- Deadlocking latchbolt
- **Master key system must be 7-pin**
- Function only available with CO, R6, R7, R8 roses or CN escutcheon

Note: CIND indicator provided standard. V series indicators must be specified by option code. Indicator shows deadbolt position only.

Trim	Model Numbers		Latchbolt Throw
	Knobs	Levers	
Standard	8820K	8820FL	3/4"
SL	—	SL8820FL	3/4"
Reflections®	—	8820RL	3/4"

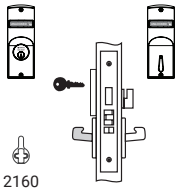

8822 Dormitory Or Exit Lock (F13)

- Latchbolt retracted by knob/lever either side
- Deadbolt operated by key outside and thumbturn inside
- When the deadbolt is projected, outside knob/lever is automatically locked
- Anti-panic operation. Operating inside knob/lever retracts the latchbolt and deadbolt simultaneously, automatically unlocking outside knob/lever.

Trim	Model Numbers		Throw	
	Knobs	Levers	Latchbolt	Deadbolt
Standard	8822K	8822FL	3/4"	1"
SL	—	SL8822FL	3/4"	1"
Reflections®	—	8822RL	3/4"	1"

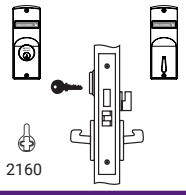

8823 Storeroom Lock

- Latchbolt retracted by knob/lever outside
- Deadbolt operated by key outside
- When deadbolt is projected, outside knob/lever is automatically locked
- No inside knob/lever or cylinder
- Not available with E3 or E4 escutcheons

Trim	Model Numbers		Throw	
	Knobs	Levers	Latchbolt	Deadbolt
Standard	8823K	8823FL	3/4"	1"
SL	—	SL8823FL	3/4"	1"
Reflections®	—	8823RL	3/4"	1"

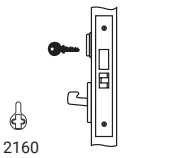

8824 Holdback Lock (F06)

- For classroom, office, or utility room doors
- Latchbolt retracted by knob/lever either side, except when outside knob/lever is locked by key outside
- Latchbolt can be held in retracted position by outside cylinder
- Inside knob/lever always active
- Deadlocking latchbolt
- NOT UL listed

Trim	Model Numbers		Latchbolt Throw
	Knobs	Levers	
Standard	8824K	8824FL	3/4"
SL	—	SL8824FL	3/4"
Reflections®	—	8824RL	3/4"

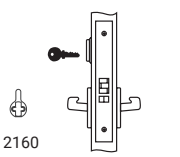

Indicator options available for both sectional and escutcheon trim.

Cylinder cam required.

Indicates rigid knob/lever.

8827 Hotel/Motel Lock

- Latchbolt retracted by knob/lever either side, except when outside knob/lever is independently locked by stopwork activator or automatically locked when the deadbolt is projected
- Latchbolt retracted by master keys and change keys only when deadbolt is NOT projected
- Deadbolt operated by emergency/shut-out or display key outside and thumbturn inside
- When deadbolt is projected, the indicator shows red with a locked padlock icon (indicating room is occupied). Access from outside can be gained only with an emergency/shut-out or display key.
- Anti-panic operation. Operating inside knob/lever automatically retracts latchbolt and deadbolt with outside knob/lever remaining locked.
- Deadlocking latchbolt
- **Master key system must be 7-pin**
- Function only available with CO, R6, R7, R8 roses or CN escutcheon

Note: CIND indicator provided standard. V series indicators must be specified by option code. Indicator shows deadbolt position only.

Trim	Model Numbers		Throw	
	Knobs	Levers	Latchbolt	Deadbolt
Standard	8827K	8827FL	3/4"	1"
SL	—	SL8827FL	3/4"	1"
Reflections®	—	8827RL	3/4"	1"

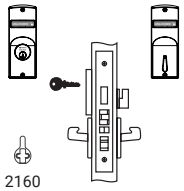

8828 Exit Or Communicating Lock (F31)

- For twin communicating or exit doors where one-sided operation is required
- Latchbolt retracted by knob/lever inside at all times
- No outside operations
- Deadlocking latchbolt
- Not available with E3 or E4 escutcheons

Trim	Model Numbers		Latchbolt Throw
	Knobs	Levers	
Standard	8828K	8828FL	3/4"
SL	—	SL8828FL	3/4"
Reflections®	—	8828RL	3/4"

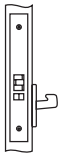

8829 Closet Lock

- Latchbolt retracted by knob/lever outside
- Outside cylinder locks or unlocks outside knob/lever
- No inside knob/lever or cylinder
- Deadlocking latchbolt
- Not available with E3 or E4 escutcheons

Trim	Model Numbers		Latchbolt Throw
	Knobs	Levers	
Standard	8829K	8829FL	3/4"
SL	—	SL8829FL	3/4"
Reflections®	—	8829RL	3/4"

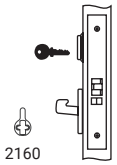

8830-2 Asylum Or Institutional Lock (F30)

- Latchbolt retracted by key both sides
- Rigid knob/lever both sides for use as pulls only
- Deadlocking latchbolt

Trim	Model Numbers		Latchbolt Throw
	Knobs	Levers	
Standard	8830-2K	8830-2FL	3/4"
SL	—	SL8830-2FL	3/4"
Reflections®	—	8830-2RL	3/4"

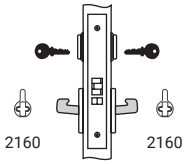

Copyright © 2004-2026, ASSA ABLOY Access and Egress Hardware Group, Inc. All rights reserved. Reproduction in whole or in part without the express written permission of ASSA ABLOY Access and Egress Hardware Group, Inc. is prohibited. Patent pending and/or patent www.assaabloydss.com/patents.

MECHANICAL FUNCTIONS

8831 Detention Lock

- Latchbolt retracted by key outside, knob/lever inside
- Latchbolt retracted by master keys and change keys only when deadbolt is NOT projected
- Deadbolt operated by emergency (guards) key only outside
- Inside knob/lever only opens door when deadbolt is in retracted position
- Outside knob/lever rigid at all times
- Deadlocking latchbolt
- Trim mounted with fasteners outside
- Furnished standard with TORX® security screws
- **Master key system must be 7-pin**

Trim	Model Numbers		Throw	
	Knobs	Levers	Latchbolt	Deadbolt
Standard	8831K	_	3/4"	1"
SL	—	SL8831FL	3/4"	1"

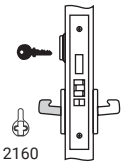

8832 Hotel/Motel Lock

- Latchbolt retracted by key outside, knob/lever inside
- Latchbolt retracted by master keys and change keys only when deadbolt is NOT projected
- Deadbolt operated by emergency/shut-out or display key only outside and thumbturn inside
- Outside knob/lever rigid at all times
- Anti-panic operation. Operating inside knob/lever retracts the latchbolt and deadbolt simultaneously.
- Deadlocking latchbolt
- **Master key system must be 7-pin**

Note: Indicator shows deadbolt position only

Trim	Model Numbers		Throw	
	Knobs	Levers	Latchbolt	Deadbolt
Standard	8832K	8832FL	3/4"	1"
SL	—	SL8832FL	3/4"	1"
Reflections®	—	8832RL	3/4"	1"

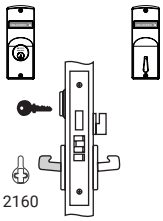

8833 Exit Lock

- Latchbolt retracted by key outside, knob/lever inside
- No knob/lever outside
- Deadlocking latchbolt
- Not available with E3 or E4 escutcheons

Trim	Model Numbers		Latchbolt Throw
	Knobs	Levers	
Standard	8833K	8833FL	3/4"
SL	—	SL8833FL	3/4"
Reflections®	—	8833RL	3/4"

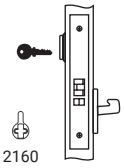

8833-2 All-Purpose Lock

- Latchbolt retracted by key both sides
- No knob/lever either side
- Deadlocking latchbolt
- Not available with E3 or E4 escutcheons

Model Number	Latchbolt Throw
8833-2	3/4"

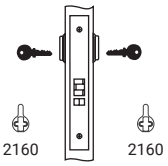

8834 All Purpose Lock

- Latchbolt retracted by key outside, knob/lever inside
- No knob/lever outside
- Latchbolt can be held in retracted position by inside thumbturn cylinder
- Deadlocking latchbolt
- NOT UL listed
- Not available with E3 or E4 escutcheons

Trim	Model Numbers		Latchbolt Throw
	Knobs	Levers	
Standard	8834K	8834FL	3/4"
Reflections®	—	8834RL	3/4"

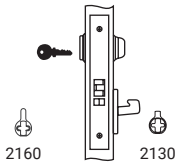

8834-2 All Purpose Lock

- For classroom, office, or utility room doors
- Latchbolt retracted by key outside, knob/lever inside
- No knob/lever outside
- Latchbolt can be held in retracted position by inside cylinder
- Deadlocking latchbolt
- NOT UL listed
- Not available with E3 or E4 escutcheons

Trim	Model Numbers		Latchbolt Throw
	Knobs	Levers	
Standard	8834-2K	8834-2FL	3/4"
Reflections®	—	8834-2RL	3/4"

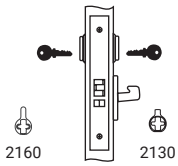

8835 Exit Lock

- Latchbolt retracted by knob/lever inside
- Deadbolt operated by thumbturn inside
- No outside operations
- Anti-panic operation. Operating inside knob/lever retracts the latchbolt and deadbolt simultaneously.
- Deadlocking latchbolt
- Not available with E3 or E4 escutcheons

Trim	Model Numbers		Throw	
	Knobs	Levers	Latchbolt	Deadbolt
Standard	8835K	8835FL	3/4"	1"
SL	—	SL8835FL	3/4"	1"
Reflections®	—	8835RL	3/4"	1"

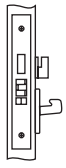

8840 Storeroom Deadbolt

- Latchbolt retracted by key outside, knob/lever inside
- Deadbolt operated by key outside and thumbturn inside
- Outside knob/lever rigid at all times
- Anti-panic operation. Operating inside knob/lever retracts the latchbolt and deadbolt simultaneously.
- Deadlocking latchbolt

Note: Indicator shows deadbolt position only

Trim	Model Numbers		Throw	
	Knobs	Levers	Latchbolt	Deadbolt
Standard	8840K	8840FL	3/4"	1"
SL	—	SL8840FL	3/4"	1"
Reflections®	—	8840RL	3/4"	1"

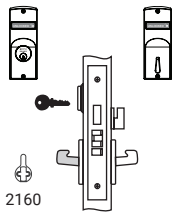

Indicator options available for both sectional and escutcheon trim.

Cylinder cam required.

Indicates rigid knob/lever.

Copyright © 2004-2026, ASSA ABLOY Access and Egress Hardware Group, Inc. All rights reserved. Reproduction in whole or in part without the express written permission of ASSA ABLOY Access and Egress Hardware Group, Inc. is prohibited.
Patent pending and/or patent www.assaabloydss.com/patents.

MECHANICAL FUNCTIONS

8847 Apartment Corridor Door Lock (F20)

- Latchbolt retracted by knob/lever either side, except when outside knob/lever is locked by stopwork activator
- Deadbolt operated by key outside, thumbturn inside
- When outside knob/lever is locked, latchbolt and deadbolt are operated by key outside
- When deadbolt is projected, outside knob/lever is automatically locked
- Anti-panic operation. Operating inside knob/lever automatically retracts latchbolt and deadbolt with outside knob/lever remaining locked.
- Deadlocking latchbolt

Note: Indicator shows deadbolt position only

Trim	Model Numbers		Throw	
	Knobs	Levers	Latchbolt	Deadbolt
Standard	8847K	8847FL	3/4"	1"
SL	—	SL8847FL	3/4"	1"
Reflections®	—	8847RL	3/4"	1"

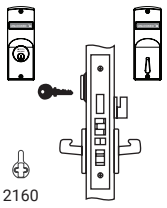

8860 Room Door Lock (F21)

- Latchbolt retracted by knob/lever either side
- Deadbolt operated by key outside, thumbturn inside

Trim	Model Numbers		Throw	
	Knobs	Levers	Latchbolt	Deadbolt
Standard	8860K	8860FL	3/4"	1"
SL	—	SL8860FL	3/4"	1"
Reflections®	—	8860RL	3/4"	1"

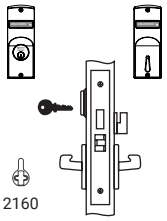

8860-2 Store Door Lock (F14)

- Latchbolt retracted by knob/lever either side
- Deadbolt operated by key both sides

Trim	Model Numbers		Throw	
	Knobs	Levers	Latchbolt	Deadbolt
Standard	8860-2K	8860-2FL	3/4"	1"
SL	—	SL8860-2FL	3/4"	1"
Reflections®	—	8860-2RL	3/4"	1"

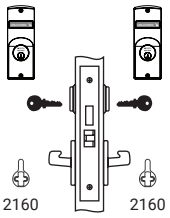

8861 Dormitory Or Storeroom Lock

- Latchbolt retracted by knob/lever either side
- Deadbolt operated by key outside, thumbturn inside
- When deadbolt is projected, outside knob/lever is automatically locked
- When deadbolt is retracted, outside knob/lever is automatically unlocked

Trim	Model Numbers		Throw	
	Knobs	Levers	Latchbolt	Deadbolt
Standard	8861K	8861FL	3/4"	1"
SL	—	SL8861FL	3/4"	1"
Reflections®	—	8861RL	3/4"	1"

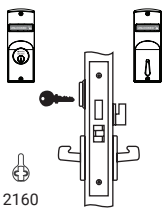

8862 Privacy, Bedroom Or Bath Lock (F22)

- Latchbolt retracted by knob/lever either side except when outside knob/lever is locked by thumbturn
- Operating inside knob/lever retracts the latchbolt, automatically unlocking outside knob/lever
- Outside emergency release unlocks outside knob/lever. E203 emergency key supplied
- Automatically unlocks when door latches

Trim	Model Numbers		Latchbolt Throw
	Knobs	Levers	
Standard	8862K	8862FL	3/4"
SL	—	SL8862FL	3/4"
Reflections®	—	8862RL	3/4"

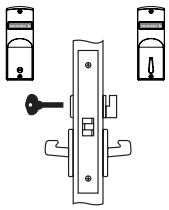

8864 Bathroom Lock With Indicator

- Latchbolt retracted by key outside, knob/lever inside
- Indicator operated by thumbturn inside, key outside
- When indicator shows red with a locked padlock icon, key outside will operate indicator and retract latchbolt
- Outside knob/lever rigid at all times
- Inside knob/lever always active
- Deadlocking latchbolt
- Function only available with CO, R6, R7, R8 roses or CN escutcheon

Note: CIND indicator provided standard. V series indicators must be specified by option code.

Trim	Model Numbers		Latchbolt Throw
	Knobs	Levers	
Standard	8864K	8864FL	3/4"
Reflections®	—	8864RL	3/4"

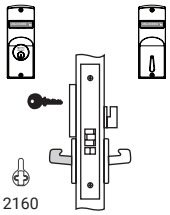

8865 Bathroom Lock

- Latchbolt retracted by knob/lever either side except when outside knob/lever is locked by thumbturn either side
- Outside thumbturn unlocks outside knob/lever
- Automatically unlocks when door latches
- Operating inside knob/lever retracts the latchbolt, automatically unlocking outside knob/lever

Trim	Model Numbers		Latchbolt Throw
	Knobs	Levers	
Standard	8865K	8865FL	3/4"
SL	—	SL8865FL	3/4"
Reflections®	—	8865RL	3/4"

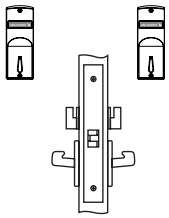

8866 Passage Lock With Indicator

- For doors with indicator that do not require locking
- Latchbolt retracted by knob/lever either side at all times
- Throwing thumbturn on inside changes state of status indicator
- Rotating either knob/lever returns indicator to previous state

Note: Only available with "V" series indicators. Indicator option code must be specified with this function

Trim	Model Numbers		Latchbolt Throw
	Knobs	Levers	
Standard	8866K	8866FL	3/4"
Reflections®	—	8866RL	3/4"

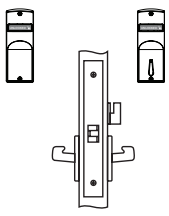

Indicator options available for both sectional and escutcheon trim.

Cylinder cam required.

Indicates rigid knob/lever.

Copyright © 2004-2026, ASSA ABLOY Access and Egress Hardware Group, Inc. All rights reserved. Reproduction in whole or in part without the express written permission of ASSA ABLOY Access and Egress Hardware Group, Inc. is prohibited. Patent pending and/or patent www.assaabloydss.com/patents.

MECHANICAL FUNCTIONS

8867 Dormitory Or Exit Lock (F12)

- Latchbolt retracted by knob/lever either side, except when outside knob/lever is locked by stopwork activator or automatically locked when deadbolt is projected
- Deadbolt operated by key outside, thumbturn inside
- When outside knob/lever is locked, operating key outside retracts both latchbolt and deadbolt
- Anti-panic operation. Operating inside knob/lever retracts the latchbolt and deadbolt simultaneously, with outside knob/lever remaining locked.

Note: Indicator shows deadbolt position only

Trim	Model Numbers		Throw	
	Knobs	Levers	Latchbolt	Deadbolt
Standard	8867K	8867FL	3/4"	1"
SL	—	SL8867FL	3/4"	1"
Reflections®	—	8867RL	3/4"	1"

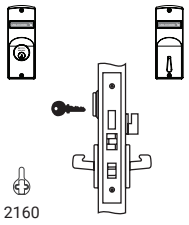

836A/838A Dummy Trim Both Sides

- Push and pull only
- Knob/lever both sides
- Both knob/lever non-operational and rigid at all times
- Plain rectangular front used with spindle-bar stabilizer
- Available in all sectional and escutcheon trim

Model Numbers	
Knobs	Levers
836A prefixed by design symbol (i.e. COR836A, CO x CN836A)	838AFL prefixed by design symbol (i.e.JNR838AFL, JN x CN838AFL)

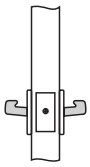

836B/838B Dummy Trim Both Sides

- Push or pull only
- Knob/lever both sides of inactive leaf of a pair of doors
- Both knob/lever non-operational and rigid at all times
- Available in all sectional and escutcheon trim
- 2815 Strike available upon request

Model Numbers	
Knobs	Levers
836B prefixed by design symbol (i.e. COR836B, CO x CN836B)	838BFL prefixed by design symbol (i.e.JNR838BFL, JN x CN838BFL)

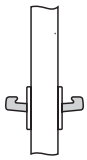

855 Dummy Trim One Side

- Push or pull only
- Knob/lever one side
- Knob/lever non-operational and rigid at all times
- Function only available with CO, R3, R4, R5 roses or CN escutcheon

Model Numbers	
Knobs	Levers
855 prefixed by design symbol (i.e. COR855)	855FL prefixed by design symbol (i.e. CR x CN855FL)

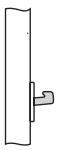

Active Dummy Trim

- Knob/lever both sides
- Push or pull only
- Primarily for lever handle trim
- Knob/lever active to prevent damage

8871DT – Armor front acts as strike for latchbolt only functions
8872DT – Armor front acts as strike for latchbolt x deadbolt functions

Model Numbers			Outside | Inside
Knobs	Levers	Reflections®	
8870DT	8870FLDT	8870RLDT	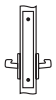
8871DT	8871FLDT	8871RLDT	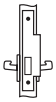
8872DT	8872FLDT	8872RLDT	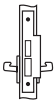

Handing must be specified when ordering

 Indicator options available for both sectional and escutcheon trim.

Cylinder cam required.

Indicates rigid knob/lever.

Copyright © 2004-2026, ASSA ABLOY Access and Egress Hardware Group, Inc. All rights reserved. Reproduction in whole or in part without the express written permission of ASSA ABLOY Access and Egress Hardware Group, Inc. is prohibited.
Patent pending and/or patent www.assaabloydss.com/patents.

INDICATORS

Applications

8800 Series indicators can be used in a variety of applications and are most commonly used to identify occupancy or display the locked/unlocked status of a room.

- Restrooms
- Quiet rooms
- Nursing mother's rooms
- Classroom doors



Shown with optional directional arrow engraving

Features

- Inside, outside or both sides of the door
- Sectional or escutcheon trim
- Available with 24 different functions – including thumbturn functions
- Large viewing window
- Patented curved design for viewing at multiple angles
- Window located prominently above the cylinder
- Highly reflective viewing window for increased safety
- Optional directional engraving available – must specify handing
- Retrofitable for existing applications

Functions

- Indicators are available with the following 8800 Series functions. See pages 12-17 for details.

Function	Description
8802	Privacy, Bedroom Or Bath Lock (F19)
8808	Classroom Lock (F05)
8808-2	Intruder Latchbolt Lock (F32)
8809	Classroom Or Office Lock
8811-2	Intruder Deadbolt Lock (F33)
8812-2	Intruder Deadbolt Lock (F34)
8814	Deadlock (F18)
8814-2	Deadlock (F16)
8815	Deadlock (F17)

Function	Description
8818-2	Classroom Security Intruder Lock
8820	Hotel Guest Lock (F15)
8822	Dormitory Or Exit Lock (F13)
8827	Hotel/Motel Lock
8832	Hotel/Motel Lock
8840	Storeroom Deadbolt
8847	Apartment Corridor Door Lock (F20)
8860	Room Door Lock (F21)

Function	Description
8860-2	Store Door Lock (F14)
8861	Dormitory Or Storeroom Lock
8862	Privacy, Bedroom Or Bath Lock (F22)
8864	Bathroom Lock With Indicator
8865	Bathroom Lock
8866	Passage Lock With Indicator
8867	Dormitory Or Exit Lock (F12)

Copyright © 2004-2026, ASSA ABLOY Access and Egress Hardware Group, Inc. All rights reserved. Reproduction in whole or in part without the express written permission of ASSA ABLOY Access and Egress Hardware Group, Inc. is prohibited.
Patent pending and/or patent www.assaabloydss.com/patents.

INDICATORS

Sectional Trim

- Surface mounted
- Torx security screws provided
- Compatible with all rose designs: CO, R3, R4, R5, R6, R7, R8, R9
- Available with optional directional arrow engraving

To order indicator with complete lock, specify by adding V series indicator option code to order string. See page 21 for indicator codes and page 22 for how to order examples.



Shown with optional directional arrow engraving

Retrofit/Upgrade Kits

Retrofit/upgrade kits only are available for existing applications only. Each kit includes single side indicator plate with mechanism, screw pack, plastic template and instructions.

To order retrofit/upgrade kits only, specify by model number below. Door thickness, handing and indicator option code must also be specified with kit. Retrofit/upgrade kits with directional engraving must include lock handing.

See page 22 for how to order examples. Note: Indicators for both sides of door require two kits.

	Model #	Used with Functions	Available Option Codes	Indicator Location
	YA190	8811-2, 8814, 8814-2, 8815, 8818-2, 8820, 8822, 8827, 8832, 8840, 8847, 8860, 8860-2, 8861, 8864, 8867	Outside Trim: V10, V10F, V20, V20F, V30, V40, V50, V60 Inside Trim: V01, V01F, V03, V04, V06	Inside and/or Outside*
	YA191	8812-2		
	YA192	8808, 8808-2, 8809		
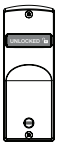	YA193	8802, 8862	V10, V10F, V20, V20F, V30, V40, V50, V60	Outside
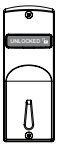	YA194	8802, 8815, 8820, 8822, 8827, 8832, 8840, 8847, 8860, 8861, 8867	V01, V01F, V03, V04, V06	Inside**
	YA196	8862, 8864, 8865, 8866		
	YA198	8809		
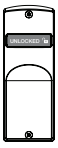	YA197	8814, 8866	Outside Trim: V10, V10F, V20, V20F, V30, V40, V50, V60 Inside Trim: V01, V01F, V03, V04, V06	Inside, Outside

*When indicators are required on both sides of the door, 2 upgrade kits must be ordered, one kit for each side.
**Used on inside and outside for 8865 function.

Copyright © 2004-2026, ASSA ABLOY Access and Egress Hardware Group, Inc. All rights reserved. Reproduction in whole or in part without the express written permission of ASSA ABLOY Access and Egress Hardware Group, Inc. is prohibited.
Patent pending and/or patent www.assaabloydss.com/patents.

Escutcheon Trim

- Unique escutcheon (VN) for both inside and outside of door for indicator functions
- Non-indicator functions provide with standard escutcheons as ordered, i.e. E3, E4, CN, SL
- Through-bolted
- Torx security screws optional
- Available with optional directional arrow engraving (see page 22)

Specify option code when ordered with lock. See page 21 for indicator option codes and page 22 for how to order examples.

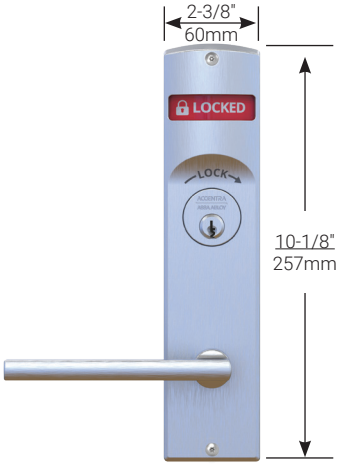

Shown with optional directional arrow engraving

Escutcheon Trim Upgrade Kit Only

Complete trim kits are available to retrofit/upgrade existing applications.

Trim kit includes levers and escutcheons with mechanism for both sides of door, screw pack, door marker and instructions.

To order trim kit only, specify by adding TP prefix to function required with trim, hand, finish and indicator option code.

Prefix	Functions
TP	All functions*

*Escutcheon indicator trim kits available for all functions as listed on page 18 except 8814, 8814-2, 8815.

Note: Escutcheon applications require both sides of the door to have the unique VN escutcheon. Kits will be provided as a set.

How to Order Example (Escutcheon Kit Only)

Lever	Escutcheon	Function	Hand	Finish	Options
AU	VN	TP8802*	RH	626	V21 x EMB

* The function of the existing lock is required so the proper escutcheons can be provided.

Privacy Bedroom/Bath function x escutcheon trim x double indicator - Vacant/Occupied – Green/Red (Outside) Unlocked/Locked – Green/Red (Inside) x inside engraving with “Lock” and directional arrow

Copyright © 2004-2026, ASSA ABLOY Access and Egress Hardware Group, Inc. All rights reserved. Reproduction in whole or in part without the express written permission of ASSA ABLOY Access and Egress Hardware Group, Inc. is prohibited. Patent pending and/or patent www.assaabloydss.com/patents.

INDICATORS

Indicator Option Codes

8800 Series indicator option codes are designed to convey wording, color and side of door desired in one simple code. To order, specify option code for complete locksets and/or retrofit/upgrade trim kits.

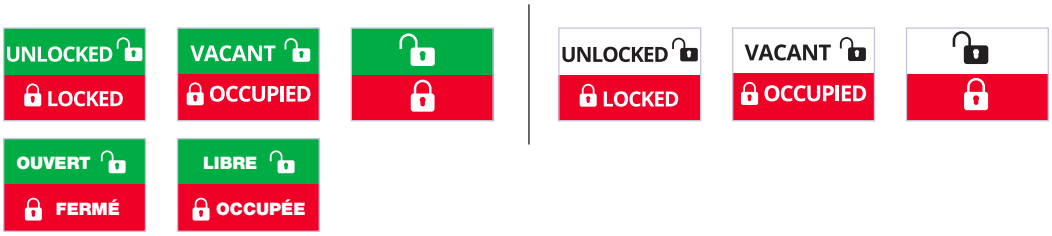

Single Indicator			
Option Code	**Outside Wording**	**Inside Wording**	**Color**
V10	Unlocked/Locked	No Indicator	Green/Red
V10F	Ouvert/Fermé	No Indicator	Green/Red
V20	Vacant/Occupied	No Indicator	Green/Red
V20F	Libre/Occupée	No Indicator	Green/Red
V30	Icons Only	No Indicator	Green/Red
V40	Unlocked/Locked	No Indicator	White/Red
V50	Vacant/Occupied	No Indicator	White/Red
V60	Icons Only	No Indicator	White/Red
V01	No Indicator	Unlocked/Locked	Green/Red
V01F	No Indicator	Ouvert/Fermé	Green/Red
V03	No Indicator	Icons Only	Green/Red
V04	No Indicator	Unlocked/Locked	White/Red
V06	No Indicator	Icons Only	White/Red
Double Indicator			
Option Code	**Outside Wording**	**Inside Wording**	**Color**
V11	Unlocked/Locked	Unlocked/Locked	Green/Red
V11F	Ouvert/Fermé	Ouvert/Fermé	Green/Red
V21	Vacant/Occupied	Unlocked/Locked	Green/Red
V21F	Libre/Occupée	Ouvert/Fermé	Green/Red
V33	Icons Only	Icons Only	Green/Red
V44	Unlocked/Locked	Unlocked/Locked	White/Red
V54	Vacant/Occupied	Unlocked/Locked	White/Red
V66	Icons Only	Icons Only	White/Red
Engraving			
Option Code	**Outside**	**Inside**	**Wording**
EMA	Engraving	No Engraving	"Lock" with arrow
EMB	No Engraving	Engraving	"Lock" with arrow
EMC	Engraving	Engraving	"Lock" with arrow

Copyright © 2004-2026, ASSA ABLOY Access and Egress Hardware Group, Inc. All rights reserved. Reproduction in whole or in part without the express written permission of ASSA ABLOY Access and Egress Hardware Group, Inc. is prohibited. Patent pending and/or patent www.assaabloydss.com/patents.

INDICATORS

Engraving Options

- Laser engraving with "LOCK" and directional arrow
- Only available in the following finishes: 605, 606, 618, 619, 625, 626, 629*, 630*
- Available with MicroShield®
- Door handing must be specified

Option Code	Description
EMA	Engraving located on outside of door
EMB	Engraving located on inside of door
EMC	Engraving located on inside and outside of door

Note: Engraving is available as an option for all functions when ordered with an indicator. Option codes must be specified with complete lock and/or retrofit (upgrade) kits/trim.

*Indicator escutcheon is nickel plated to match Stainless Steel



How to Order Examples

Complete with Lock

Sectional Trim

Trim	Function	Hand	Finish	Options
AUR	8818-2FL	RH	626	V01

Classroom Security Intruder Latchbolt function x sectional trim x single indicator inside – Unlocked/Locked – Green/Red

Escutcheon Trim

Lever	Escutcheon	Function	Hand	Finish	Options
AU	VN	8802FL	RH	626	V21 x EMB

Privacy Bedroom/Bath function x escutcheon trim x double indicator - Vacant/Occupied – Green/Red (Outside) Unlocked/Locked – Green/Red (Inside) x inside engraving with "Lock" and directional arrow

Retrofit (Upgrade)/Trim Kit Only

Sectional Trim*

Model #	Door Thickness	Hand	Finish	Option
YA190	1-3/4"	RH	626	V04

Keyed function indicator for sectional trim x single indicator inside – Unlocked/Locked – Red/White

* When indicators are required on both sides of the door, 2 upgrade kits must be ordered, one kit for each side.

Escutcheon Trim

Lever	Escutcheon	Function	Hand	Finish	Options
AU	VN	TP8802**	RH	626	V21 x EMB

Privacy Bedroom/Bath function x escutcheon trim x double indicator - Vacant/Occupied – Green/Red (Outside) Unlocked/Locked – Green/Red (Inside) x inside engraving with "Lock" and directional arrow

** The function of the existing lock is required so the proper escutcheons can be provided.

Copyright © 2004-2026, ASSA ABLOY Access and Egress Hardware Group, Inc. All rights reserved. Reproduction in whole or in part without the express written permission of ASSA ABLOY Access and Egress Hardware Group, Inc. is prohibited. Patent pending and/or patent www.assaabloydss.com/patents.

INDICATORS - IND/CIND OPTION

Indicator options IND and CIND are provided with a padlock icon on a green or red background.

Trim Availability

	IND	CIND
Levers/Knobs	All	All
Roses	CO, R3, R4, R5, R6, R7, R8, R9	CO, R6, R7, R8
Escutcheons	CN	CN



Functions

Indicators are available on the outside of the door for the following functions:

	8802	8818-2*	8820	8822	8827	8832	8862	8864
IND	Optional						Optional	
CIND		Optional	Standard	Optional	Standard	Optional		Standard

*Specify mounting side.

How To Order

When ordering with lock, specify the complete lock ordering string and include option code based on function.

Trim	Function	Hand	Finish	Option
AUR	8802FL	RH	626	IND
AUCN	8822FL	RH	626	CIND

When ordering for upgrade to existing lockset, specify kit number x finish.

Trim	Type	Kit
Sectional	Privacy	IND-K x Finish
Sectional	Cylinder	CIND-K x Finish
Escutcheon	Privacy	CN88 x 261 x Finish
Escutcheon	Cylinder	CN88 x 260 x Finish
Escutcheon	Cylinder w/cointurn	CN88 x 262 x Finish

Notes:
- IND-K and CIND-K are kits which includes indicator mechanism and mounting hardware. Cylinder not included.
- For escutcheon trim, CN88 is the outside escutcheon only with indicator assembly, does not include levers or cylinder

IND		CIND	
			
Deadbolt Thrown Locked icon/Red background	**Deadbolt Retracted Unlocked icon/Green background**	**Deadbolt Thrown Locked icon/Red background**	**Deadbolt Retracted Unlocked icon/Green background**

Copyright © 2004-2026, ASSA ABLOY Access and Egress Hardware Group, Inc. All rights reserved. Reproduction in whole or in part without the express written permission of ASSA ABLOY Access and Egress Hardware Group, Inc. is prohibited. Patent pending and/or patent www.assaabloydss.com/patents.

8800 Series with Motorized Electric Latch Retraction



The Motorized Electric Latch Retraction (MELR) mortise lock is designed for commercial, institutional, and industrial facilities for access control of openings where code compliance, dependable operation and resistance to physical abuse is required.

This unique option brings motorized electric latch retraction to passage, storeroom or institutional function mortise locksets. The 8800 Series MELR mortise lock is the perfect solution for push-pull conditions or handicap access and is ideal for use with automatic operators to facilitate accessibility/ ADA compliance and possible hands-free access.

Features

- Latchbolt retracts in ½ of a second with applied power. Removing power allows latch to be projected back to the extended position.
- Request to Exit available as an option (storeroom and passage functions only)
- No heating detectable with extended latch holdback
- Field reversible for handing
- Can be used in conjunction with any access control application using standard mortise locks
- Creates a push/pull operation that satisfies both in-swing and out-swing doors
- Access controlled via an access control system or by physical key override
- Environmentally friendly with low power requirements
- Motorized latch retraction and spring back extension provides quiet operation
- Smooth latch retraction with applied pressure of over 50lbs to the door
- Provided with Electrolynx® connectors for ease of installation

Certifications

- ANSI/BHMA A156.13 Grade 1
- ANSI/BHMA A156.25
- UL/cUL Fire Rated for 3 Hour Doors
- UL294/ULC60839-11-1 Listed
- Windstorm (refer to local codes)

Electrical Specifications

- Voltage 24VDC (+10% / -15%)
- Operating current 700mA
- Hold Current 50mA

Functions

Outside / Inside	Function	Type	Function Description
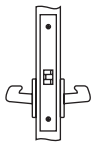	8801FL x MELR 8801RL x MELR	Passage	• Power off - latchbolt extended, both levers unlocked. • Power on - latchbolt automatically retracted. • Rotating either lever retracts latchbolt. • Request to Exit available - specify option REX*
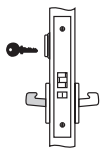	8805FL x MELR 8805RL x MELR	Storeroom	• Power off - latchbolt extended, outside lever rigid/locked. • Power on - latchbolt automatically retracted, outside lever rigid. • Key in cylinder outside retracts latchbolt. • Rotating inside lever retracts latchbolt. • Auxiliary latch deadlocks latchbolt. • Request to Exit available - specify option REX
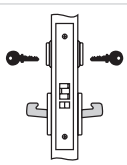	8830-2FL x MELR 8830-2RL x MELR	Asylum or Institutional	• Power off - latchbolt extended, both levers rigid/locked. • Power on - latchbolt automatically retracted, both levers rigid. • Key in cylinder either side retracts latchbolt. • Auxiliary latch deadlocks latchbolt. **CAUTION:** Not recommended for use on any door used for Life Safety egress

*Signal sent when either lever operated; there is no differentiation between outside and inside lever.

Copyright © 2004-2026, ASSA ABLOY Access and Egress Hardware Group, Inc. All rights reserved. Reproduction in whole or in part without the express written permission of ASSA ABLOY Access and Egress Hardware Group, Inc. is prohibited.
Patent pending and/or patent www.assaabloydss.com/patents.

Featuring EcoFlex®:

- Reduces energy consumption up to 92% as certified by GreenCircle
  - Lower operating costs
  - Assists with load reduction in optimizing energy performance credit in LEED
  - Reduces number of power supplies required
- Field configurable to fail safe or fail secure
- Operates from 12-24VDC, offering greater flexibility in system design
- Innovative actuator design provides superior reliability
  - Higher performance and reduced maintenance
  - Ability to have longer cable runs without negatively impacting lock function
  - Reduces risk of voltage drops and eliminates inductive kickback
  - Lower total cost of ownership

Trim Designs

8800 electrified mortise locksets are available with all standard lever and Reflections® trims.

ANSI/BHMA

Certified ANSI/BHMA A156.13, Series 1000, Operational Grade 1 (8800FL with CN escutcheon meet Security Grade 1).

Applications

Stair tower doors, office doors, classrooms, interlocks, elevator lobby doors, laboratories, computer rooms, cashier stations, hospital equipment rooms and pharmaceutical storage rooms. For narrow frame profiles, consult factory.

Electrical Specifications

Fail Safe/Fail Secure

- Current draw: 15mA @ 12V or 24V Continuous
- Peak current draw: 500mA @ 12V or 24V (Max 2 locks per 1A Power Supply)
- Monitor switch rating: 2A Max to 30VDC

Note: Operating voltage not to exceed +/- 10%.

Environmental Specifications

Operating Temperature
-13°F (-25°C) to 151°F (66°C)

Handing

8800 electrified mortise locksets are field reversible.

Monitoring Options

Model Number	Description
REX	Request to Exit - An SPDT switch that monitors activation of the free lever (not available with knob trim). REX is available for all mechanical and electrified functions and can be supplied alone or with either LBM or DBM.
LBM	Latchbolt Monitor - An SPDT switch that monitors full retraction of the latchbolt. LBM is available for all electrified functions and can be supplied alone or with REX.
DBM	Deadbolt Monitor - An SPDT switch that monitors full retraction of the deadbolt. DBM is available for all mechanical and electrified funtions with a deadbolt and can be supplied alone or with REX.

ElectroLynx®

ASSA ABLOY ACCENTRA® electrified 8800 locks are equipped with ElectroLynx connectors. As a standard feature, these connectors link power from the incoming source to electrified locking products, including hinges, locks, exit devices, magnetic holders and strikes.

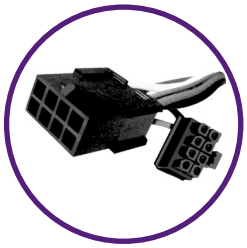

Note: Electrified door hardware with ElectroLynx connectors require a compatible number of lead wires attached to the door hinge.

Copyright © 2004-2026, ASSA ABLOY Access and Egress Hardware Group, Inc. All rights reserved. Reproduction in whole or in part without the express written permission of ASSA ABLOY Access and Egress Hardware Group, Inc. is prohibited. Patent pending and/or patent www.assaabloydss.com/patents.

ELECTRIFIED MORTISE LOCKSET FUNCTIONS

Fail Safe

The following functions are locked when power is on and unlocked when power is off.

8880

- Power off – outside lever active
- Power on – outside lever locked
- Auxiliary latch deadlocks latchbolt
- Inside lever always free
- No key override

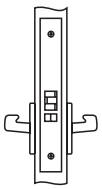

8884

- Power off – both levers active
- Power on – both levers locked
- Auxiliary latch deadlocks latchbolt
- No key override

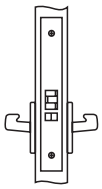

8890

- Power off – outside lever active
- Power on – outside lever locked
- Auxiliary latch deadlocks latchbolt
- Inside lever always free
- Mechanical key override by outside when locked

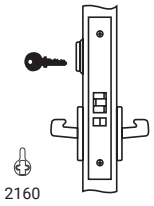

8894-2

- Power off – both levers active
- Power on – both levers locked
- Auxiliary latch deadlocks latchbolt
- Mechanical key override by both sides when locked

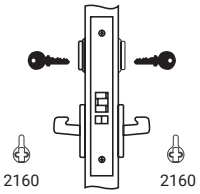

8896

- Power off – outside lever active (even when deadbolt thrown)
- Power on – outside lever locked
- Auxiliary latch deadlocks latchbolt
- Deadbolt projected by key outside, thumbturn inside
- Inside lever always free
- Mechanical key override by outside when locked
- Anti-panic operation. Operating inside knob/lever automatically retracts latchbolt and deadbolt

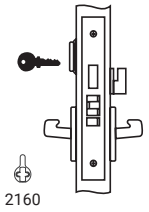

8896-2

- Power off – outside lever active (even when deadbolt thrown)
- Power on – outside lever locked
- Auxiliary latch deadlocks latchbolt
- Deadbolt projected by key both sides
- Inside lever always free
- Mechanical key override by both sides when locked
- Anti-panic operation. Operating inside knob/lever automatically retracts latchbolt and deadbolt

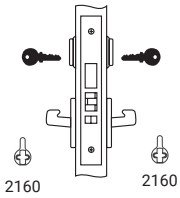

8898

- Power off – both levers active (even when deadbolt thrown)
- Power on – both levers locked
- Auxiliary latch deadlocks latchbolt
- Deadbolt projected by key outside, thumbturn inside
- Mechanical key override by outside when locked
- Anti-panic operation. Operating inside knob/lever automatically retracts latchbolt and deadbolt

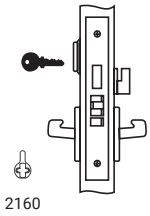

8898-2

- Power off – both levers active (even when deadbolt thrown)
- Power on – both levers locked
- Auxiliary latch deadlocks latchbolt
- Deadbolt projected by key both sides
- Mechanical key override by both sides when locked
- Anti-panic operation. Operating inside knob/lever automatically retracts latchbolt and deadbolt

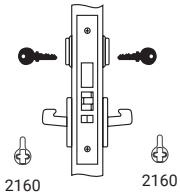

Copyright © 2004-2026, ASSA ABLOY Access and Egress Hardware Group, Inc. All rights reserved. Reproduction in whole or in part without the express written permission of ASSA ABLOY Access and Egress Hardware Group, Inc. is prohibited.
Patent pending and/or patent www.assaabloydss.com/patents.

ELECTRIFIED MORTISE LOCKSET FUNCTIONS

Fail Secure

The following functions are unlocked when the power is on and locked when power is off.

8881

- Power off – outside lever locked
- Power on – outside lever active
- Auxiliary latch deadlocks latchbolt
- Inside lever always free
- No key override

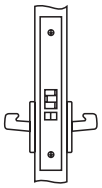

8897

- Power off – outside lever locked
- Power on – outside lever active (even when deadbolt thrown)
- Auxiliary latch deadlocks latchbolt
- Deadbolt projected by key outside, thumbturn inside
- Inside lever always free
- Mechanical key override by outside when locked
- Anti-panic operation. Operating inside knob/lever automatically retracts latchbolt and deadbolt

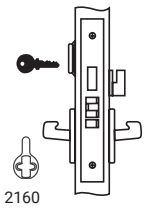

8885

- Power off – both levers locked
- Power on – both levers active
- Auxiliary latch deadlocks latchbolt
- No key override

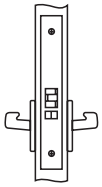

8897-2

- Power off – outside lever locked
- Power on – outside lever active (even when deadbolt thrown)
- Auxiliary latch deadlocks latchbolt
- Deadbolt projected by key both sides
- Inside lever always free
- Mechanical key override by both sides when locked
- Anti-panic operation. Operating inside knob/lever automatically retracts latchbolt and deadbolt

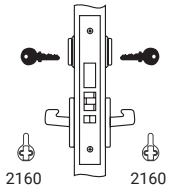

8891

- Power off – outside lever locked
- Power on – outside lever active
- Auxiliary latch deadlocks latchbolt
- Inside lever always free
- Mechanical key override by outside when locked

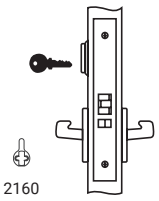

8899

- Power off – both levers locked
- Power on – both levers active (even when deadbolt thrown)
- Auxiliary latch deadlocks latchbolt
- Deadbolt projected by key outside, thumbturn inside
- Mechanical key override by outside when locked
- Anti-panic operation. Operating inside knob/lever automatically retracts latchbolt and deadbolt

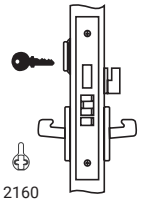

8895-2

- Power off – both levers locked
- Power on – both levers active
- Auxiliary latch deadlocks latchbolt
- Mechanical key override by both sides when locked

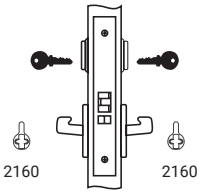

8899-2

- Power off – both levers locked
- Power on – both levers active (even when deadbolt thrown)
- Auxiliary latch deadlocks latchbolt
- Deadbolt projected by key both sides
- Mechanical key override by both sides when locked
- Anti-panic operation. Operating inside knob/lever automatically retracts latchbolt and deadbolt

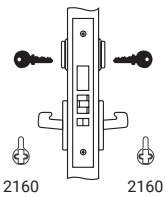

Copyright © 2004-2026, ASSA ABLOY Access and Egress Hardware Group, Inc. All rights reserved. Reproduction in whole or in part without the express written permission of ASSA ABLOY Access and Egress Hardware Group, Inc. is prohibited.
Patent pending and/or patent www.assaabloydss.com/patents.

LSP-12-24 POWER SUPPLY



Operation
LifeSafety Power supplies are designed to provide reliable filtered and regulated power for long life to a variety of electrified hardware components.

Features
- Selectable voltage output between 12V and 24V with a single switch
- Internal Back-Up battery charging circuit *
- Regulated and filtered, fuse protected outputs
- Each output can be individually turned on and off via a jumper
- Power status of each output is shown by an LED
- Rugged steel enclosure
- Fire alarm interface included – Dry contacts NO/NC, 9-33VDC, 3-15mA

Electrical Specifications
- Inputs: 120VAC
- Outputs: 12VDC @ 6 Amp or 24VDC @3 Amp
  - 8 Total Outputs

Listings
- UL294, UL603, UL1076
- ULC S318, ULC S319

Applications
- Fail safe mortise locks
- Fail secure mortise locks
- MELR

* Note: Batteries are not included with the power supply

Model	Description
LSP-12-24	12V – 6AMP / 24V – 3AMP Power Supply

ASSA ABLOY ACCENTRA® recommends McKinney®, Pemko and Securitron® for power transfer devices and other electronic accessories.

Copyright © 2004-2026, ASSA ABLOY Access and Egress Hardware Group, Inc. All rights reserved. Reproduction in whole or in part without the express written permission of ASSA ABLOY Access and Egress Hardware Group, Inc. is prohibited. Patent pending and/or patent www.assaabloydss.com/patents.

CYLINDERS

Conventional Mortise Cylinders

Illustration	Cylinder Model Number	Application	Cam	Length	
				6-Pin	7-Pin
	2153	Standard cylinder	2160	1-1/8" 1-1/4" 1-3/8" 1-1/2" 1-5/8" 1-3/4"	1-1/4" 1-3/8" 1-1/2" 1-5/8" 1-3/4"
	2153S	For inside operation of 8817-2 and 8834-2 functions only	2130		
	2123	Cylinder for longer lengths	2160	1-7/8" thru 3-1/2" in 1/8" increments*	
	2123S	For inside operation of 8817-2 and 8834-2 functions only for longer lengths	2130		
	2719	For 8820, 8827, 8831 and 8832 functions	2160	1-3/8"	–

*Contact Technical Product Support for cylinder collar requirements when ordering these cylinders separately. See pages 32-39 for other collar requirements.

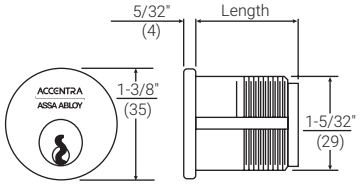

Interchangeable Core Mortise Cylinders

Cylinder Model Number	Application	Cam	Length	Pins	Housing Only Model Number	Core Only Model Number
2196	Standard Cylinder	2160	1-1/2", 1-3/4", 2"	6	2221	1210
2197	Standard Cylinder	2160	1-11/16", 2"	7	2213	1220
2196H	For Hotel/Motel Locks 8820, 8827, 8832	2160	1-11/16"	6	2213	1210H
2196S	For inside operations of 8817-2 and 8834-2 functions	2130	1-1/2"	6	2214S	1210
2197S	For inside operations of 8817-2 and 8834-2 functions	2130	1-11/16"	7	2217S	1220

Note: When ordering interchangeable core cylinders or cores only, control keys are not furnished. If control keys are required they must be ordered separately.

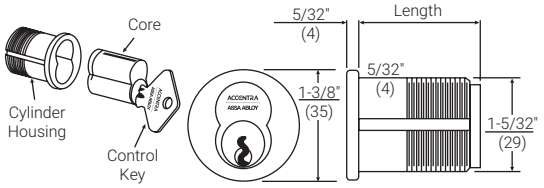

Copyright © 2004-2026, ASSA ABLOY Access and Egress Hardware Group, Inc. All rights reserved. Reproduction in whole or in part without the express written permission of ASSA ABLOY Access and Egress Hardware Group, Inc. is prohibited. Patent pending and/or patent www.assaabloydss.com/patents.

Security Cylinders

Security cylinders contain two independent locking mechanisms. The first is a traditional 6- or 7-pin tumbler mechanism with spool drivers for greatly increased picking resistance.

The second is an innovative 5-tumbler rotating disc mechanism with sidebar engagement. The rotating discs are spring loaded and block the bottom of the keyway.

Illustration

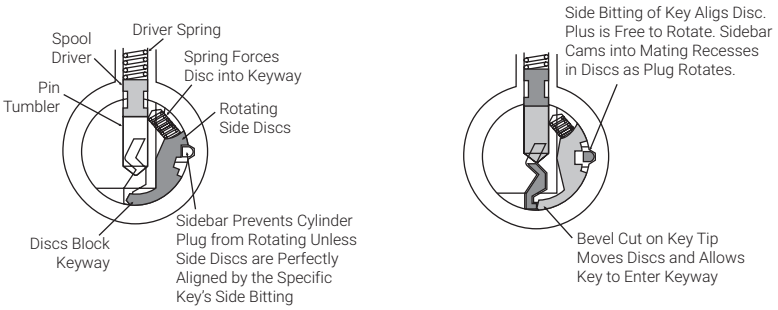

Security/High Security Mortise Cylinders

Model Number	Application	Cam	Length	
			6-pin	7-pin
5153/U5153	Standard Cylinder	2160	1-1/8" 1-1/4"	1-1/4"
5153S/U5153S	For inside operations of 8817-2 and 8834-2 functions	2130		
5719/U5719	For 8820, 8827, 8831 and 8832 functions	2160	1-3/8"	

Security Interchangeable Core Mortise Cylinders

Cylinder Model Number	Application	Cam	Length	Pins	Housing Only Model Number	Core Only Model Number
5196	Standard Cylinder	2160	1-1/2"	6	2221	5210
5197	Standard Cylinder	2160	1-11/16"	7	2213	5220
5196H	For Hotel/Motel Locks 8820, 8827, 8832	2160	1-11/16"	6	2213	5210H
5196S	For inside operations of 8817-2 and 8834-2 functions	2130	1-1/2"	6	2214S	5210
5197S	For inside operations of 8817-2 and 8834-2 functions	2130	1-11/16"	7	2217S	5220

Note: When ordering interchangeable core cylinders or cores only, control keys are not furnished. If control keys are required they must be ordered separately.

Copyright © 2004-2026, ASSA ABLOY Access and Egress Hardware Group, Inc. All rights reserved. Reproduction in whole or in part without the express written permission of ASSA ABLOY Access and Egress Hardware Group, Inc. is prohibited. Patent pending and/or patent www.assaabloydss.com/patents.

ASSA ABLOY ACCENTRA® KeyMark®

For those applications requiring protected key control, ASSA ABLOY ACCENTRA® KeyMark® cylinders guard against unauthorized key duplication. The ASSA ABLOY ACCENTRA® KeyMark Security Leg® keyway feature increases resistance against picking and impressioning and can easily retrofit into existing systems. For further details and availability, refer to the separate ASSA ABLOY ACCENTRA® KeyMark catalog.

Model Number	Type	Cam	Length	Pins	Housing Only Model Number	Core Only Model Number
K100	Fixed Core Mortise	KC1	1-1/8", 1-1/4" 1-1/2", 1-3/4" 2"	6 or 7	N/A	N/A
K820	Large Format IC Mortise	KC1	1-1/2", 1-3/4" 2"	6	K860	K800
			1-11/16" 2"	7		
K620	Small Format IC Mortise	KC1	1-1/4"	6	K660	K600
			1-3/8", 1-3/4"	6 or 7		
K630	Small Format IC Mortise-Tapered	KC1	1-1/4"	6	K670	K600
			1-3/8"	6 or 7		

Note: KC2 cam required for inside operation of 8817-2 and 8834-2 functions.

Miscellaneous Cylinder

Model Number	Application	Cam	Length
S2053S	Thumbturn cylinder, for inside operation of 8834 function only	2130	1" 1-1/8"
S2053	Thumbturn cylinder, for replacement of key operated cylinder.	2160	1" 1-1/8"

Cams

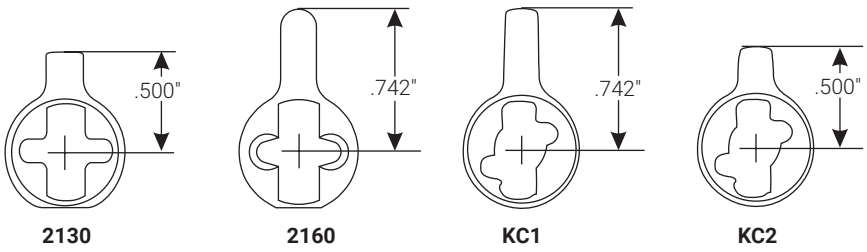

Other Manufacturers' Keyway Cylinders/Cores

Illustration	Model Number	Type	Cam	Length	Pins	Housing Only Model Number	Core Only Model Number
	A620	Small Format IC Mortise, includes Best® Keyway Core. Available keyed random, master keyed or uncombinated. Specify keyway A, B, C, D, E, F, G, H, J, K, L or M.	KC1	1-1/4"	6	K660	A600
				1-3/8" 1-3/4"	6 or 7		
	2553	Fixed Core Mortise Schlage® "C" Keyway Cylinder. Available 0-bitted or keyed random. Available finishes: 606, 612, 613, 626	2160	1-1/8"	6	N/A	N/A

Copyright © 2004-2026, ASSA ABLOY Access and Egress Hardware Group, Inc. All rights reserved. Reproduction in whole or in part without the express written permission of ASSA ABLOY Access and Egress Hardware Group, Inc. is prohibited.
Patent pending and/or patent www.assaabloydss.com/patents.

CYLINDER COLLARS

Cylinder collars are supplied as standard where required with products supplied with cylinders. Collar size and thickness are supplied to suit the length of the cylinder, the thickness of the door and the trim ordered. (If door thickness is not specified, collars will be supplied to suit 1-3/4" (44mm) door.)

Collar length required must be specified for cylinders and/or housings ordered separately.

1765 Recessed Cylinder Collar
"A" Dimension: See chart for available sizes. To order, specify "1765.size" i.e. 1765.250.
Material: Brass, Stainless Steel

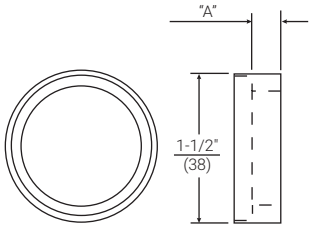

"A" Dimension

Size	Specify
1/16"	.062
3/32"	.094
1/8"	.125
5/32"	.156
3/16"	.187
7/32"	.219
1/4"	.250
9/32"	.281
5/16"	.312

Size	Specify
11/32"	.344
3/8"	.375
13/32"	.406
7/16"	.437
15/32"	.469
1/2"	.500
17/32"	.531
9/16"	.563
19/32"	.594

Size	Specify
21/32"	.656
23/32"	.719
3/4"	.750
27/32"	.844
59/64"	.924
15/16"	.937
1-15/32"	1.473

1766 Step Collar for U5109 and U5153 High Security Cylinders.
Material: Stainless Steel

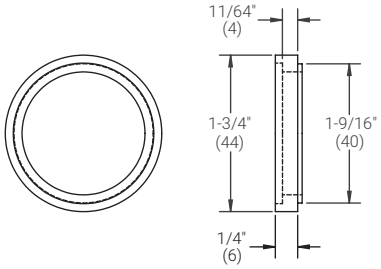

1767 Square Collar (provided standard with R9 rose)
"A" Dimension: See chart for available sizes.
To order, specify "1767.size" i.e. 1767.248
Material: Brass, Stainless Steel

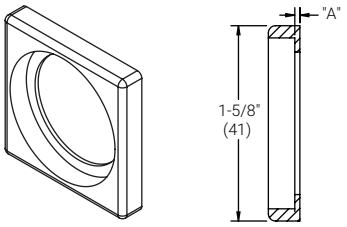

KP3 Wave Washer (Furnished standard with 1765 collar for ASSA ABLOY ACCENTRA® KeyMark® cylinders only).



"A" Dimension

Size	Specify
1/32	.042
1/8	.122
3/16	.192
1/4	.248
5/16	.310
3/8	.373
7/16	.436
1/2	.498
9/16	.560
5/8	.623
11/16	.703
25/32	.788

KP4 Flush Mount Cylinder Collar
Material: Brass, Bronze

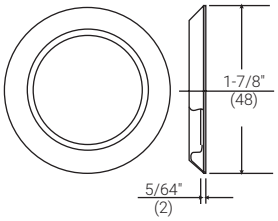

Copyright © 2004-2026, ASSA ABLOY Access and Egress Hardware Group, Inc. All rights reserved. Reproduction in whole or in part without the express written permission of ASSA ABLOY Access and Egress Hardware Group, Inc. is prohibited. Patent pending and/or patent www.assaabloydss.com/patents.

CYLINDER COLLARS

For Use With Standard Sectional And All Reflections® Trims

Door Thickness	Rose or Escutcheon Trim Design	Cylinder Length	2153, 2153S, 2719, 5153, 5719 Fixed Core Cylinders*			2196, 2196H, 2196S, 2197, 2197S, 5196, 5196H, 5196S, 5197,5197S LFIC Cylinders*			U5153, U5153S, H.S. Fixed Core Cylinders**
			Standard Collar	Square Collar (Single Cyl)	Square Collar (Double Cyl)	Standard Collar	Square Collar (Single Cyl)	Square Collar (Double Cyl)	Standard Collar
1-3/4"	R, R1, R2, R3, R4, R5, R6, R7, R8, R9, E1, E2, E3, E4	1-1/8"	1765.250	1767.122	1767.192				Collar Not Req'd
		1-1/4"	1765.375	1767.248	1767.373				1766
		1-3/8"	1765.531	1767.310	1767.498				
		1-1/2"	1765.656	1767.498	1767.623	1765.656	1767.498	1767.623	
		1-11/16"				1765.844	1767.703	1767.788	
2"	R, R1, R2, R3, R4, R5, R6, R7, R8, R9, E1, E2, E3, E4	1-1/8"	1765.125	1767.042	1767.122				Use Longer Cyl
		1-1/4"	1765.250	1767.122	1767.248				Collar Not Req'd
		1-3/8"	1765.375	1767.248	1767.373				
		1-1/2"	1765.531	1767.373	1767.498	1765.531	1767.310	1767.498	
		1-11/16"				1765.719	1767.498	1767.703	
2-1/4"	R, R1, R2, R3, R4, R5, R6, R7, R8, R9, E1, E2, E3, E4	1-1/8"	KP4	Use Longer Cyl	Use Longer Cyl				Collar Not Req'd
		1-1/4"	1765.125	1767.042	1767.122				Collar Not Req'd
		1-3/8"	1765.250	1767.122	1767.248				
		1-1/2"	1765.375	1767.248	1767.373	1765.375	1767.248	1767.373	
		1-11/16"				1765.563	1767.436	1767.560	
2-1/2"	R, R1, R2, R3, R4, R5, R6, R7, R8, R9, E1, E2, E3, E4	1-1/8"	Use Longer Cyl	Use Longer Cyl	Use Longer Cyl				Use Longer Cyl
		1-1/4"	KP4	1767.042	1767.042				Collar Not Req'd
		1-3/8"	1765.125	1767.042	1767.122				
		1-1/2"	1765.250	1767.122	1767.248	1765.250	1767.121	1767.248	
		1-11/16"				1765.469	1767.310	1767.436	
2-3/4"	R, R1, R2, R3, R4, R5, R6, R7, R8, R9, E1, E2, E3, E4	1-1/8"	Use Longer Cyl	Use Longer Cyl	Use Longer Cyl				Use Longer Cyl
		1-1/4"	Use Longer Cyl	Use Longer Cyl	Use Longer Cyl				Use Longer Cyl
		1-3/8"	KP4	1767.042	1767.042				
		1-1/2"	1765.125	1767.042	1767.122	1765.125	1767.042	1767.122	
		1-11/16"				1765.344	1767.192	1767.310	
3"	R, R1, R2, R3, R4, R5, R6, R7, R8, R9, E1, E2, E3, E4	1-1/8"	Use Longer Cyl	Use Longer Cyl	Use Longer Cyl				Use Longer Cyl
		1-1/4"	Use Longer Cyl	Use Longer Cyl	Use Longer Cyl				Use Longer Cyl
		1-3/8"	Use Longer Cyl	Use Longer Cyl	Use Longer Cyl				
		1-1/2"	KP4	1767.042	1767.042	KP4	1767.042	1767.042	
		1-11/16"				1765.187	1767.112	1767.192	
3-1/4"	R, R1, R2, R3, R4, R5, R6, R7, R8, R9, E1, E2, E3, E4	1-1/8"	Use Longer Cyl	Use Longer Cyl	Use Longer Cyl				Use Longer Cyl
		1-1/4"	Use Longer Cyl	Use Longer Cyl	Use Longer Cyl				Use Longer Cyl
		1-3/8"	Use Longer Cyl	Use Longer Cyl	Use Longer Cyl				
		1-1/2"	Use Longer Cyl	Use Longer Cyl	Use Longer Cyl	Use Longer Cyl	Use Longer Cyl	Use Longer Cyl	
		1-11/16"				1765.062	1767.042	1767.042	

*Refer to Pages 29-31 for available lengths for each model
** Square collar not available.
Note: R1, R2, E1 and E2 discontinued. Information for reference only.

Copyright © 2004-2026, ASSA ABLOY Access and Egress Hardware Group, Inc. All rights reserved. Reproduction in whole or in part without the express written permission of ASSA ABLOY Access and Egress Hardware Group, Inc. is prohibited. Patent pending and/or patent www.assaabloydss.com/patents.

CYLINDER COLLARS

For Use With Standard Sectional And All Reflections® Trims

Door Thickness	Rose or Escutcheon Trim Design	Cylinder Length	K100 ASSA ABLOY ACCENTRA® KeyMark® Fixed Core Cylinders			K820, K860 ASSA ABLOY ACCENTRA® KeyMark® LFIC Cylinders			K620, K630, K660, K670, A620, A630 ASSA ABLOY ACCENTRA® KeyMark® and Best Keyway SFIC Cylinders		
			Standard Collar	Square Collar (Single Cyl)	Square Collar (Double Cyl)	Standard Collar	Square Collar (Single Cyl)	Square Collar (Double Cyl)	Standard Collar	Square Collar (Single Cyl)	Square Collar (Double Cyl)
1-3/4"	R, R1, R2, R3, R4, R5, R6, R7, R8, R9, E1, E2, E3, E4	1-1/8"	1765.312	1767.192	1767.248						
		1-1/4"	1765.375	1767.310	1767.373				1765.375	1767.248	1767.373
		1-3/8"							1765.563	1767.373	1767.498
		1-1/2"	1765.656	1767.560	1767.623	1765.656	1767.498	1767.623			
		1-11/16"				1765.844	1767.703	1767.788			
2"	R, R1, R2, R3, R4, R5, R6, R7, R8, R9, E1, E2, E3, E4	1-1/8"	1765.187	1767.042	1767.122						
		1-1/4"	1765.281	1767.192	1767.248				1765.281	1767.122	1767.248
		1-3/8"							1765.469	1767.248	1767.373
		1-1/2"	1765.563	1767.436	1767.498	1765.563	1767.373	1767.498			
		1-11/16"				1765.750	1767.560	1767.703			
2-1/4"	R, R1, R2, R3, R4, R5, R6, R7, R8, R9, E1, E2, E3, E4	1-1/8"	1765.062	1767.042	1767.042						
		1-1/4"	1765.125	1767.042	1767.122				1765.125	1767.042	1767.122
		1-3/8"							1765.312	1767.122	1767.248
		1-1/2"	1765.406	1767.310	1767.373	1765.406	1767.248	1767.373			
		1-11/16"				1765.594	1767.436	1767.560			
2-1/2"	R, R1, R2, R3, R4, R5, R6, R7, R8, R9, E1, E2, E3, E4	1-1/8"	Use Longer Cyl	Use Longer Cyl	Use Longer Cyl						
		1-1/4"	1765.062	1767.042	1767.042				1765.062	Use Longer Cyl	Use Longer Cyl
		1-3/8"							1765.187	1767.042	1767.122
		1-1/2"	1765.281	1767.192	1767.248	1765.281	1767.122	1767.248			
		1-11/16"				1765.500	1767.310	1767.436			
2-3/4"	R, R1, R2, R3, R4, R5, R6, R7, R8, R9, E1, E2, E3, E4	1-1/8"	Use Longer Cyl	Use Longer Cyl	Use Longer Cyl						
		1-1/4"	Use Longer Cyl	Use Longer Cyl	Use Longer Cyl				Use Longer Cyl	Use Longer Cyl	Use Longer Cyl
		1-3/8"							1765.062	1767.042	1767.042
		1-1/2"	1765.187	1767.042	1767.122	1765.187	1767.042	1767.122	Use Longer Cyl	Use Longer Cyl	Use Longer Cyl
		1-11/16"				1765.375	1767.192	1767.310	Use Longer Cyl	Use Longer Cyl	Use Longer Cyl
3"	R, R1, R2, R3, R4, R5, R6, R7, R8, R9, E1, E2, E3, E4	1-1/8"	Use Longer Cyl	Use Longer Cyl	Use Longer Cyl						
		1-1/4"	Use Longer Cyl	Use Longer Cyl	Use Longer Cyl				Use Longer Cyl	Use Longer Cyl	Use Longer Cyl
		1-3/8"							Use Longer Cyl	Use Longer Cyl	Use Longer Cyl
		1-1/2"	1765.062	1767.042	1767.042	1765.062	Use Longer Cyl	Use Longer Cyl			
		1-11/16"				1765.219	1767.042	1767.192			
3-1/4"	R, R1, R2, R3, R4, R5, R6, R7, R8, R9, E1, E2, E3, E4	1-1/8"	Use Longer Cyl	Use Longer Cyl	Use Longer Cyl						
		1-1/4"	Use Longer Cyl	Use Longer Cyl	Use Longer Cyl				Use Longer Cyl	Use Longer Cyl	Use Longer Cyl
		1-3/8"							Use Longer Cyl	Use Longer Cyl	Use Longer Cyl
		1-1/2"	Use Longer Cyl	Use Longer Cyl	Use Longer Cyl	Use Longer Cyl	Use Longer Cyl	Use Longer Cyl			
		1-11/16"				1765.062	1767.042	1767.042			

*Refer to Pages 29-31 for available lengths for each model
** Square collar not available.
Note: R1, R2, E1 and E2 discontinued. Information for reference only.

Copyright © 2004-2026, ASSA ABLOY Access and Egress Hardware Group, Inc. All rights reserved. Reproduction in whole or in part without the express written permission of ASSA ABLOY Access and Egress Hardware Group, Inc. is prohibited. Patent pending and/or patent www.assaabloydss.com/patents.

CYLINDER COLLARS

For Use With Standard Escutcheon Trim

Door Thickness	Escutcheon Trim Design	2153, 2153S, 5153, 2123, 2123S Fixed Core Mortise Cylinders		U5153, U5153S, H.S. Fixed Core Cylinders		2196, 2196S, 5196, 2197, 2197S, 5197 LFIC Cylinders		5719, 2719 Fixed Core Hotel/ Motel Cylinders		5196H, 2196H Hotel/Motel LFIC Cylinders		K100 ASSA ABLOY ACCENTRA® KeyMark® Fixed Core Cylinders		K820, K860 ASSA ABLOY ACCENTRA® KeyMark® LFIC Cylinders		K620, K630 K660, K670, A620, A630 ACCENTRA KeyMark® and Best® Keyway SFIC Cylinders	
		Cylinder Length	Collar Required	Cylinder Length	Collar Required	Cylinder Length	Collar Required	Cylinder Length	Collar Required	Cylinder Length	Collar Required	Cylinder Length	Collar Required	Cylinder Length	Collar Required	Cylinder Length	Collar Required
1-3/4" (44)	Copenhagen (E)	1-1/8"	1765.156	1-1/8"	Collar Not Req'd	1-1/2"	1765.563	1-3/8"	1765.469	1-11/16"	1765.750	1-1/8"	1765.187	1-1/2"	1765.594	1-1/4"	1765.344
		1-1/4"	1765.312	1-1/4"	Collar Not Req'd	1-11/16"	1765.750					1-1/4"	1765.344	1-11/16"	1765.844	1-3/8"	1765.469
		1-3/8"	1765.469	1-3/8"	Collar Not Req'd							1-1/2"	1765.594				
		1-1/2"	1765.563	1-1/2"	Collar Not Req'd												
	Camden (CN)	1-1/8"	Collar Not Req'd	1-1/8"	N/A	1-1/2"	1765.219	1-3/8"	1765.094	1-11/16"	1765.469	1-1/8"	Collar Not Req'd	1-1/2"	1765.250	1-1/4"	Collar Not Req'd
		1-1/4"	Collar Not Req'd	1-1/4"	N/A	1-11/16"	1765.406					1-1/4"	Collar Not Req'd	1-11/16"	1765.469	1-3/8"	1765.125
		1-3/8"	1765.094	1-3/8"	N/A							1-1/2"	1765.250				
		1-1/2"	1765.219	1-1/2"	N/A												
	SL	1-1/8"	1765.094	1-1/8"	N/A	1-1/2"	1765.469	1-3/8"	1765.344	1-11/16"	1765.656	1-1/8"	1765.125	1-1/2"	1765.500	1-1/4"	1765.156
		1-1/4"	1765.219	1-1/4"	Collar Not Req'd	1-11/16"	1765.656					1-1/4"	1765.156	1-11/16"	1765.719	1-3/8"	1765.375
		1-3/8"	1765.375	1-3/8"	N/A							1-1/2"	1765.500				
		1-1/2"	1765.500	1-1/2"	N/A												
	Easton (CE)	1-1/8"	1765.062	1-1/8"	N/A	1-1/2"	1765.500	1-3/8"	1765.375	1-11/16"	1765.656	1-1/8"	1765.125	1-1/2"	1765.500	1-1/4"	1765.156
		1-1/4"	1765.219	1-1/4"	Collar Not Req'd	1-11/16"	1765.656					1-1/4"	1765.156	1-11/16"	1765.719	1-3/8"	1765.375
		1-3/8"	1765.344	1-3/8"	N/A							1-1/2"	1765.500				
		1-1/2"	1765.500	1-1/2"	N/A												
	Lenoir (LN)	1-1/8"	1765.094	1-1/8"	N/A	1-1/2"	1765.531	1-3/8"	1765.406	1-11/16"	1765.750	1-1/8"	1765.187	1-1/2"	1765.563	1-1/4"	1765.281
		1-1/4"	1765.281	1-1/4"	Collar Not Req'd	1-11/16"	1765.750					1-1/4"	1765.281	1-11/16"	1765.750	1-3/8"	1765.469
		1-3/8"	1765.406	1-3/8"	N/A							1-1/2"	1765.563				
		1-1/2"	1765.531	1-1/2"	N/A												
2" (51)	Copenhagen (E)	1-1/8"	KP4	1-1/8"	N/A	1-1/2"	1765.406	1-3/8"	1765.312	1-11/16"	1765.594	1-1/8"	1765.094	1-1/2"	1765.469	1-1/4"	1765.219
		1-1/4"	1765.187	1-1/4"	Collar Not Req'd	1-11/16"	1765.594					1-1/4"	1765.219	1-11/16"	1765.656	1-3/8"	1765.344
		1-3/8"	1765.312	1-3/8"	N/A							1-1/2"	1765.469				
		1-1/2"	1765.406	1-1/2"	N/A												
	Camden (CN)	1-1/8"	N/A	1-1/8"	N/A	1-1/2"	1765.062	1-3/8"	N/A	1-11/16"	1765.250	1-1/8"	N/A	1-1/2"	1765.125	1-1/4"	Collar Not Req'd
		1-1/4"	Collar Not Req'd	1-1/4"	Collar Not Req'd	1-11/16"	1765.250					1-1/4"	Collar Not Req'd	1-11/16"	1765.344	1-3/8"	Collar Not Req'd*
		1-3/8"	N/A	1-3/8"	N/A							1-1/2"	1765.125				
		1-1/2"	1765.062	1-1/2"	N/A												
	SL	1-1/8"	N/A	1-1/8"	N/A	1-1/2"	1765.344	1-3/8"	1765.219	1-11/16"	1765.531	1-1/8"	KP4	1-1/2"	1765.375	1-1/4"	1765.094
		1-1/4"	1765.094	1-1/4"	N/A	1-11/16"	1765.531					1-1/4"	1765.094	1-11/16"	1765.563	1-3/8"	1765.250
		1-3/8"	1765.219	1-3/8"	N/A							1-1/2"	1765.375				
		1-1/2"	1765.344	1-1/2"	N/A												
	Easton (CE)	1-1/8"	N/A	1-1/8"	N/A	1-1/2"	1765.344	1-3/8"	1765.219	1-11/16"	1765.500	1-1/8"	KP4	1-1/2"	1765.375	1-1/4"	1765.094
		1-1/4"	1765.062	1-1/4"	N/A	1-11/16"	1765.500					1-1/4"	1765.094	1-11/16"	1765.563	1-3/8"	1765.250
		1-3/8"	1765.219	1-3/8"	N/A							1-1/2"	1765.375				
		1-1/2"	1765.344	1-1/2"	N/A												
	Lenoir (LN)	1-1/8"	Collar Not Req'd	1-1/8"	N/A	1-1/2"	1765.344	1-3/8"	1765.187	1-11/16"	1765.531	1-1/8"	Collar Not Req'd*	1-1/2"	1765.406	1-1/4"	1765.125
		1-1/4"	1765.094	1-1/4"	N/A	1-11/16"	1765.531					1-1/4"	1765.125	1-11/16"	1765.594	1-3/8"	1765.312
		1-3/8"	1765.187	1-3/8"	N/A							1-1/2"	1765.406				
		1-1/2"	1765.344	1-1/2"	N/A												

*Single Cylinder Only
N/A = Application Not Available
Note: Copenhagen, Easton and Lenoir escutcheons discontinued. Information for reference only.

Copyright © 2004-2026, ASSA ABLOY Access and Egress Hardware Group, Inc. All rights reserved. Reproduction in whole or in part without the express written permission of ASSA ABLOY Access and Egress Hardware Group, Inc. is prohibited.
Patent pending and/or patent www.assaabloydss.com/patents.

CYLINDER COLLARS

For Use With Standard Escutcheon Trim

Door Thickness	Escutcheon Trim Design	2153, 2153S, 5153, 2123, 2123S Fixed Core Mortise Cylinders		U5153, U5153S, H.S. Fixed Core Cylinders		2196, 2196S, 5196, 2197, 2197S, 5197 LFIC Cylinders		5719, 2719 Fixed Core Hotel/ Motel Cylinders		5196H, 2196H Hotel/Motel LFIC Cylinders		K100 ASSA ABLOY ACCENTRA® KeyMark® Fixed Core Cylinders		K820, K860 ASSA ABLOY ACCENTRA® KeyMark® LFIC Cylinders		K620, K630 K660, K670, A620, A630 ASSA ABLOY ACCENTRA® KeyMark® and Best® Keyway SFIC Cylinders	
		Cylinder Length	Collar Required	Cylinder Length	Collar Required	Cylinder Length	Collar Required	Cylinder Length	Collar Required	Cylinder Length	Collar Required	Cylinder Length	Collar Required	Cylinder Length	Collar Required	Cylinder Length	Collar Required
2-1/4" (57)	Copenhagen (E)	1-1/8"	N/A	1-1/8"	N/A	1-1/2"	1765.344	1-3/8"	1765.187	1-11/16"	1765.500	1-1/8"	N/A	1-1/2"	1765.375	1-1/4"	1765.094
		1-1/4"	1765.062	1-1/4"	N/A	1-11/16"	1765.500					1-1/4"	1765.094	1-11/16"	1765.531	1-3/8"	1765.250
		1-3/8"	1765.187	1-3/8"	N/A							1-1/2"	1765.375				
		1-1/2"	1765.344	1-1/2"	N/A												
	Camden (CN)	1-1/8"	N/A	1-1/8"	N/A	1-1/2"	N/A	1-3/8"	Collar Not Req'd	1-11/16"	1765.156	1-1/8"	N/A	1-1/2"	N/A	1-1/4"	N/A
		1-1/4"	N/A	1-1/4"	N/A	1-11/16"	1765.156					1-1/4"	N/A	1-11/16"	1765.219	1-3/8"	Collar Not Req'd*
		1-3/8"	Collar Not Req'd	1-3/8"	N/A							1-1/2"	N/A				
		1-1/2"	N/A	1-1/2"	N/A												
	SL	1-1/8"	N/A	1-1/8"	N/A	1-1/2"	1765.219	1-3/8"	1765.062	1-11/16"	1765.406	1-1/8"	N/A	1-1/2"	1765.250	1-1/4"	N/A
		1-1/4"	N/A	1-1/4"	N/A	1-11/16"	1765.406					1-1/4"	N/A	1-11/16"	1765.469	1-3/8"	1765.156
		1-3/8"	1765.062	1-3/8"	N/A							1-1/2"	1765.250				
		1-1/2"	1765.219	1-1/2"	N/A												
	Easton (CE)	1-1/8"	N/A	1-1/8"	N/A	1-1/2"	1765.219	1-3/8"	1765.062	1-11/16"	1765.406	1-1/8"	N/A	1-1/2"	1765.250	1-1/4"	N/A
		1-1/4"	N/A	1-1/4"	N/A	1-11/16"	1765.406					1-1/4"	N/A	1-11/16"	1765.469	1-3/8"	1765.156
		1-3/8"	1765.062	1-3/8"	N/A							1-1/2"	1765.250				
		1-1/2"	1765.219	1-1/2"	N/A												
	Lenoir* (LN)	1-1/8"	N/A	1-1/8"	Collar Not Req'd	1-1/2"	1765.219	1-3/8"	Collar Not Req'd	1-11/16"	1765.406	1-1/8"	Collar Not Req'd	1-1/2"	1765.312	1-1/4"	1765.062
		1-1/4"	Collar Not Req'd	1-1/4"	Collar Not Req'd	1-11/16"	1765.406					1-1/4"	1765.062	1-11/16"	1765.469	1-3/8"	1765.187
		1-3/8"	1765.094	1-3/8"	Collar Not Req'd							1-1/2"	1765.312				
		1-1/2"	1765.219	1-1/2"	Collar Not Req'd												
2-1/2" (64)	Copenhagen (E)	1-1/8"	N/A	1-1/8"	N/A	1-1/2"	1765.187	1-3/8"	1765.062	1-11/16"	1765.375	1-1/8"	N/A	1-1/2"	1765.219	1-1/4"	N/A
		1-1/4"	N/A	1-1/4"	N/A	1-11/16"	1765.375					1-1/4"	N/A	1-11/16"	1765.406	1-3/8"	1765.094
		1-3/8"	1765.062	1-3/8"	N/A							1-1/2"	1765.219				
		1-1/2"	1765.187	1-1/2"	N/A												
	Camden (CN)	1-1/8"	N/A	1-1/8"	N/A	1-1/2"	Collar Not Req'd	1-3/8"	N/A	1-11/16"	1765.062	1-1/8"	N/A	1-1/2"	Collar Not Req'd	1-1/4"	N/A
		1-1/4"	N/A	1-1/4"	N/A	1-11/16"	1765.062					1-1/4"	N/A	1-11/16"	1765.062	1-3/8"	N/A
		1-3/8"	N/A	1-3/8"	N/A							1-1/2"	Collar Not Req'd			1-3/4"	1765.187
		1-1/2"	Collar Not Req'd	1-1/2"	N/A												
	SL	1-1/8"	N/A	1-1/8"	N/A	1-1/2"	1765.062	1-3/8"	N/A	1-11/16"	1765.250	1-1/8"	N/A	1-1/2"	1765.125	1-1/4"	N/A
		1-1/4"	N/A	1-1/4"	N/A	1-11/16"	1765.250					1-1/4"	N/A	1-11/16"	1765.312	1-3/8"	KP4
		1-3/8"	N/A	1-3/8"	N/A							1-1/2"	1765.125				
		1-1/2"	1765.062	1-1/2"	N/A												
	Easton (CE)	1-1/8"	N/A	1-1/8"	N/A	1-1/2"	1765.062	1-3/8"	N/A	1-11/16"	1765.250	1-1/8"	N/A	1-1/2"	1765.125	1-1/4"	N/A
		1-1/4"	N/A	1-1/4"	N/A	1-11/16"	1765.250					1-1/4"	N/A	1-11/16"	1765.312	1-3/8"	KP4
		1-3/8"	N/A	1-3/8"	N/A							1-1/2"	1765.125				
		1-1/2"	1765.062	1-1/2"	N/A												
	Lenoir (LN)	1-1/8"	N/A	1-1/8"	N/A	1-1/2"	1765.094	1-3/8"	N/A	1-11/16"	1765.312	1-1/8"	N/A	1-1/2"	1765.156	1-1/4"	Collar Not Req'd
		1-1/4"	N/A	1-1/4"	N/A	1-11/16"	1765.312					1-1/4"	Collar Not Req'd	1-11/16"	1765.375	1-3/8"	1765.062
		1-3/8"	Collar Not Req'd	1-3/8"	N/A							1-1/2"	1765.156				
		1-1/2"	1765.094	1-1/2"	N/A												

*Single Cylinder Only
N/A = Application Not Available
Note: Copenhagen, Easton and Lenoir escutcheons discontinued. Information for reference only.

Copyright © 2004-2026, ASSA ABLOY Access and Egress Hardware Group, Inc. All rights reserved. Reproduction in whole or in part without the express written permission of ASSA ABLOY Access and Egress Hardware Group, Inc. is prohibited. Patent pending and/or patent www.assaabloydss.com/patents.

CYLINDER COLLARS

For Use With Standard Escutcheon Trim

Door Thickness	Escutcheon Trim Design	2153, 2153S, 5153, 2123, 2123S Fixed Core Mortise Cylinders		U5153, U5153S, H.S. Fixed Core Cylinders		2196, 2196S, 5196, 2197, 2197S, 5197 LFIC Cylinders		5719, 2719 Fixed Core Hotel/ Motel Cylinders		5196H, 2196H Hotel/Motel LFIC Cylinders		K100 ASSA ABLOY ACCENTRA® KeyMark® Fixed Core Cylinders		K820, K860 ASSA ABLOY ACCENTRA® KeyMark® LFIC Cylinders		K620, K630 K660, K670, A620, A630 ASSA ABLOY ACCENTRA® KeyMark® and Best® Keyway SFIC Cylinders	
		Cylinder Length	Collar Required	Cylinder Length	Collar Required	Cylinder Length	Collar Required	Cylinder Length	Collar Required	Cylinder Length	Collar Required	Cylinder Length	Collar Required	Cylinder Length	Collar Required	Cylinder Length	Collar Required
2-3/4" (70)	Copenhagen (E)	1-1/8"	N/A	1-1/8"	N/A	1-1/2"	1765.062	1-3/8"	N/A	1-11/16"	1765.250	1-1/8"	N/A	1-1/2"	1765.062	1-1/4"	N/A
		1-1/4"	N/A	1-1/4"	N/A	1-11/16"	1765.250					1-1/4"	N/A	1-11/16"	1765.250	1-3/8"	N/A
		1-3/8"	N/A	1-3/8"	N/A							1-1/2"	1765.062				
		1-1/2"	1765.062	1-1/2"	N/A												
	Camden (CN)	1-1/8"	N/A	1-1/8"	N/A	1-1/2"	N/A	1-3/8"	N/A	1-11/16"	Collar Not Req'd	1-1/8"	N/A	1-1/2"	N/A	1-1/4"	N/A
		1-1/4"	N/A	1-1/4"	N/A	1-11/16"	Collar Not Req'd					1-1/4"	N/A	1-11/16"	Collar Not Req'd*	1-3/8"	N/A
		1-3/8"	N/A	1-3/8"	N/A							1-1/2"	N/A				
		1-1/2"	N/A	1-1/2"	N/A												
	SL	1-1/8"	N/A	1-1/8"	N/A	1-1/2"	N/A	1-3/8"	N/A	1-11/16"	1765.094	1-1/8"	N/A	1-1/2"	KP4	1-1/4"	N/A
		1-1/4"	N/A	1-1/4"	N/A	1-11/16"	1765.094					1-1/4"	N/A	1-11/16"	1765.187	1-3/8"	N/A
		1-3/8"	N/A	1-3/8"	N/A							1-1/2"	KP4				
		1-1/2"	N/A	1-1/2"	N/A												
	Easton (CE)	1-1/8"	N/A	1-1/8"	N/A	1-1/2"	N/A	1-3/8"	N/A	1-11/16"	1765.094	1-1/8"	N/A	1-1/2"	KP4	1-1/4"	N/A
		1-1/4"	N/A	1-1/4"	N/A	1-11/16"	1765.094					1-1/4"	N/A	1-11/16"	1765.187	1-3/8"	N/A
		1-3/8"	N/A	1-3/8"	N/A							1-1/2"	KP4				
		1-1/2"	N/A	1-1/2"	N/A												
	Lenoir* (LN)	1-1/8"	N/A	1-1/8"	N/A	1-1/2"	1765.062	1-3/8"	N/A	1-11/16"	1765.156	1-1/8"	N/A	1-1/2"	1765.062	1-1/4"	N/A
		1-1/4"	N/A	1-1/4"	N/A	1-11/16"	1765.156					1-1/4"	N/A	1-11/16"	1765.219	1-3/8"	N/A
		1-3/8"	N/A	1-3/8"	N/A							1-1/2"	1765.062				
		1-1/2"	1765.062	1-1/2"	N/A												
3" (76)	Copenhagen (E)	1-1/8"	N/A	1-1/8"	N/A	1-1/2"	N/A	1-3/8"	N/A	1-11/16"	1765.094	1-1/8"	N/A	1-1/2"	N/A	1-1/4"	N/A
		1-1/4"	N/A	1-1/4"	N/A	1-11/16"	1765.094					1-1/4"	N/A	1-11/16"	1765.156	1-3/8"	N/A
		1-3/8"	N/A	1-3/8"	N/A							1-1/2"	N/A				
		1-1/2"	N/A	1-1/2"	N/A												
	Camden (CN)	1-3/8"	N/A	1-3/8"	N/A												
		1-1/2"	N/A	1-1/2"	N/A												
		1-5/8"	1765.062	1-5/8"	N/A												
		1-3/4"	N/A	1-3/4"	N/A												
		1-1/8"	N/A	1-1/8"	N/A	1-1/2"	N/A	1-3/8"	N/A	1-11/16"	N/A	1-1/8"	N/A	1-1/2"	N/A	1-1/4"	N/A
		1-1/4"	N/A	1-1/4"	N/A	1-11/16"	1765.094					1-1/4"	N/A	1-11/16"	Collar Not Req'd	1-3/8"	N/A
		1-3/8"	N/A	1-3/8"	N/A							1-1/2"	N/A				
		1-1/2"	N/A	1-1/2"	N/A												
	SL	1-3/8"	N/A	1-3/8"	N/A												
		1-1/2"	N/A	1-1/2"	N/A												
		1-5/8"	N/A	1-5/8"	N/A												
		1-3/4"	Collar Not Req'd	1-3/4"	N/A												
	Easton (CE)	1-1/8"	N/A	1-1/8"	N/A	1-1/2"	N/A	1-3/8"	N/A	1-11/16"	N/A	1-1/8"	N/A	1-1/2"	N/A	1-1/4"	N/A
		1-1/4"	N/A	1-1/4"	N/A	1-11/16"	1765.062					1-1/4"	N/A	1-11/16"	1765.062	1-3/8"	N/A
		1-3/8"	N/A	1-3/8"	N/A							1-1/2"	N/A				
		1-1/2"	N/A	1-1/2"	N/A												
		1-5/8"	N/A	1-5/8"	N/A												
		1-3/4"	1765.062	1-3/4"	N/A												
	Lenoir (LN)	1-1/8"	N/A	1-1/8"	N/A	1-1/2"	N/A	1-3/8"	N/A	1-11/16"	1765.062	1-1/8"	N/A	1-1/2"	Collar Not Req'd	1-1/4"	N/A
		1-1/4"	N/A	1-1/4"	N/A	1-11/16"	1765.062					1-1/4"	N/A	1-11/16"	1765.125	1-3/8"	N/A
		1-3/8"	N/A	1-3/8"	N/A							1-1/2"	N/A				
		1-1/2"	N/A	1-1/2"	N/A												
		1-5/8"	N/A	1-5/8"	N/A												
		1-3/4"	1765.094	1-3/4"	N/A												

*Single Cylinder Only
N/A = Application Not Available
Note: Copenhagen, Easton and Lenoir escutcheons discontinued. Information for reference only.

Copyright © 2004-2026, ASSA ABLOY Access and Egress Hardware Group, Inc. All rights reserved. Reproduction in whole or in part without the express written permission of ASSA ABLOY Access and Egress Hardware Group, Inc. is prohibited. Patent pending and/or patent www.assaabloydss.com/patents.

CYLINDER COLLARS

For Use With Standard Escutcheon Trim

Door Thickness	Escutcheon Trim Design	2153, 2153S, 5153, 2123, 2123S Fixed Core Mortise Cylinders		U5153, U5153S, H.S. Fixed Core Cylinders		2196, 2196S, 5196, 2197, 2197S, 5197 LFIC Cylinders		5719, 2719 Fixed Core Hotel/ Motel Cylinders		5196H, 2196H Hotel/Motel LFIC Cylinders		K100 ASSA ABLOY ACCENTRA® KeyMark® Fixed Core Cylinders		K820, K860 ASSA ABLOY ACCENTRA® KeyMark® LFIC Cylinders		K620, K630 K660, K670, A620, A630 ASSA ABLOY ACCENTRA® KeyMark® and Best® Keyway SFIC Cylinders	
		Cylinder Length	Collar Required	Cylinder Length	Collar Required	Cylinder Length	Collar Required	Cylinder Length	Collar Required	Cylinder Length	Collar Required	Cylinder Length	Collar Required	Cylinder Length	Collar Required	Cylinder Length	Collar Required
3-1/4" (83)	Copenhagen (E)	1-1/8"	N/A	1-1/8"	N/A	1-1/2"	N/A	1-3/8"	N/A	1-11/16"	1765.062	1-1/8"	**	1-1/2"	**	1-1/4"	**
		1-1/4"	N/A	1-1/4"	N/A	1-11/16"	N/A					1-1/4"	**	1-11/16"	**	1-3/8"	**
		1-3/8"	N/A	1-3/8"	N/A							1-1/2"	**				
		1-1/2"	N/A	1-1/2"	N/A												
		1-5/8"	N/A	1-5/8"	N/A												
		1-3/4"	1765.062	1-3/4"	N/A												
		1-7/8"	1765.125	1-7/8"	N/A												
	Camden (CN)	1-1/8"	N//A	1-1/8"	N/A	1-1/2"	N/A	1-3/8"	N/A	1-11/16"	1765.062	1-1/8"	**	1-1/2"	**	1-1/4"	**
		1-1/4"	N/A	1-1/4"	N/A	1-11/16"	N/A					1-1/4"	**	1-11/16"	**	1-3/8"	**
		1-3/8"	N/A	1-3/8"	N/A							1-1/2"	**				
		1-1/2"	N/A	1-1/2"	N/A												
		1-5/8"	N/A	1-5/8"	N/A												
		1-3/4"	N/A	1-3/4"	N/A												
		1-7/8"	Collar Not Req'd	1-7/8"	N/A												
	SL	1-1/8"	N/A	1-1/8"	N/A	1-1/2"	N/A	1-3/8"	N/A	1-11/16"	1765.062	1-1/8"	**	1-1/2"	**	1-1/4"	**
		1-1/4"	N/A	1-1/4"	N/A	1-11/16"	N/A					1-1/4"	**	1-11/16"	**	1-3/8"	**
		1-3/8"	N/A	1-3/8"	N/A							1-1/2"	**				
		1-1/2"	N/A	1-1/2"	N/A												
		1-5/8"	N/A	1-5/8"	N/A												
		1-3/4"	N/A	1-3/4"	N/A												
		1-7/8"	1765.062	1-7/8"	N/A												
	Easton (CE)	1-1/8"	N/A	1-1/8"	N/A	1-1/2"	N/A	1-3/8"	N/A	1-11/16"	1765.062	1-1/8"	**	1-1/2"	**	1-1/4"	**
		1-1/4"	N/A	1-1/4"	N/A	1-11/16"	N/A					1-1/4"	**	1-11/16"	**	1-3/8"	**
		1-3/8"	N/A	1-3/8"	N/A							1-1/2"	**				
		1-1/2"	N/A	1-1/2"	N/A												
		1-5/8"	N/A	1-5/8"	N/A												
		1-3/4"	N/A	1-3/4"	N/A												
		1-7/8"	1765.062	1-7/8"	N/A												
	Lenoir (LN)	1-1/8"	N/A	1-1/8"	N/A	1-1/2"	N/A	1-3/8"	N/A	1-11/16"	1765.062	1-1/8"	**	1-1/2"	**	1-1/4"	**
		1-1/4"	N/A	1-1/4"	N/A	1-11/16"	N/A					1-1/4"	**	1-11/16"	**	1-3/8"	**
		1-3/8"	N/A	1-3/8"	N/A							1-1/2"	**				
		1-1/2"	N/A	1-1/2"	N/A												
		1-5/8"	N/A	1-5/8"	N/A												
		1-3/4"	Collar Not Req'd	1-3/4"	N/A												
		1-7/8"	1765.094	1-7/8"	N/A												

*Single Cylinder Only
**Consult Factory
N/A = Application Not Available
Note: Copenhagen, Easton and Lenoir escutcheons discontinued. Information for reference only.

Copyright © 2004-2026, ASSA ABLOY Access and Egress Hardware Group, Inc. All rights reserved. Reproduction in whole or in part without the express written permission of ASSA ABLOY Access and Egress Hardware Group, Inc. is prohibited. Patent pending and/or patent www.assaabloydss.com/patents.

CYLINDER COLLARS

For Use with Sectional and Escutcheon Trim with V Series Indicators

Door Thickness	Trim	Function	Cylinder Length	Collar Required
1-3/4" (44)	Sectional or Escutcheon	Single Cylinder	1-1/8"	Collar Not Req'd
			1-1/4"	Collar Not Req'd
			1-3/8"	1765.062
			1-1/2"	1765.094
			1-11/16"	1765.281
		Double Cylinder	1-1/8"	Collar Not Req'd
			1-1/4"	N/A
			1-3/8"	1765.094
			1-1/2"	1765.219
			1-11/16"	1765.406
2" (51)	Sectional or Escutcheon	Single Cylinder	1-1/8"	N/A
			1-1/4"	Collar Not Req'd
			1-3/8"	Collar Not Req'd
			1-1/2"	1765.062
			1-11/16"	1765.187
		Double Cylinder	1-1/8"	N/A
			1-1/4"	Collar Not Req'd
			1-3/8"	N/A
			1-1/2"	1765.094
			1-11/16"	1765.281
2-1/4" (57)	Sectional or Escutcheon	Single Cylinder	1-1/8"	N/A
			1-1/4"	N/A
			1-3/8"	Collar Not Req'd
			1-1/2"	Collar Not Req'd
			1-11/16"	1765.062
		Double Cylinder	1-1/8"	N/A
			1-1/4"	N/A
			1-3/8"	Collar Not Req'd
			1-1/2"	N/A
			1-11/16"	1765.156

N/A = Application Not Available

Copyright © 2004-2026, ASSA ABLOY Access and Egress Hardware Group, Inc. All rights reserved. Reproduction in whole or in part without the express written permission of ASSA ABLOY Access and Egress Hardware Group, Inc. is prohibited. Patent pending and/or patent www.assaabloydss.com/patents.

STRIKES

8800 Series Mortise Locks come standard with a 2815 Curved Lip Strike with a 1-1/4" (32mm) lip length. The strike supplied will accommodate the locking function, i.e. latchbolt and/or deadbolt, and can be installed on doors 1-3/4" (44mm) thick. These strikes are non-handed.

Material: Brass, Stainless Steel.

Longer/Shorter Lip Lengths: Mortise lock strikes are mounted 3/8" above the center line of the lock. To determine the proper length of lip use the following formula:

1/2 of the door thickness, plus 1/16" inset, plus trim thickness, plus 1/8" for flat lip strike or 1/4" for curved lip strike. Select the nearest available length.

2815 Curved Lip:
1-1/4" (32mm) standard
To special order:
1-1/8" (29mm)
1-3/8" (35mm)
1-1/2" (38mm)
1-5/8" (41mm)
1-3/4" (44mm)
1-7/8" (48mm)
2" (51mm)
2-1/8" (54mm)
2-1/4" (57mm)

2816 Flat Lip
To special order:
7/8" (22mm)
1" (25mm)
1-1/8" (29mm)
1-1/4" (32mm)
1-1/2" (38mm)
1-3/4" (44mm)
2" (51mm)
2-1/4" (57mm)
2-1/2" (64mm)

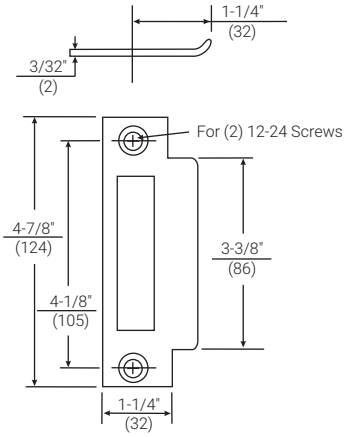

Optional Strikes

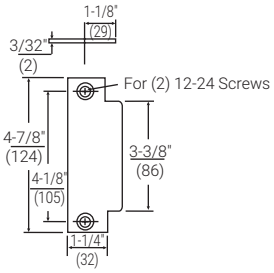

497B ANSI Blank Filler Plate: Reversible to replace a strike where a lock has been removed or where a frame with a strike preparation when no lock is installed on a door. Lip Lengths: 1-1/8" (29mm) only.
Material: Brass, Bronze, Stainless Steel.

718 Open Back Strike: Field handable for a standard V-beveled pair of doors with a latchbolt only function on the active door. This strike permits emergency opening of the inactive door without damaging the lock mechanism. Available for doors 1-3/4" or 2-1/4" thick only. Specify the door thickness required.
Material: Stainless Steel, Black Nylon Coated.

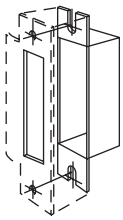

202 Strike Box: Reversible for installation with all Flat or Curved Lip Strikes. Available to special order only.
Material: Wrought Steel, Zinc Plated, Dichromated.

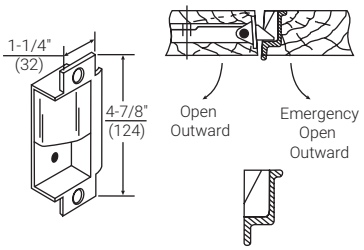

Copyright © 2004-2026, ASSA ABLOY Access and Egress Hardware Group, Inc. All rights reserved. Reproduction in whole or in part without the express written permission of ASSA ABLOY Access and Egress Hardware Group, Inc. is prohibited.
Patent pending and/or patent www.assaabloydss.com/patents.

THUMBTURNS



GF1824 Standard Thumbturn and Round Plate
Supplied as standard on all locks with round rose sectional trim or lock functions with no roses.
Thumbturn: Cast Zinc.
Plate: 1-7/8" (48mm) Diameter.
Brass, Stainless Steel.

Part Number	Door Thickness
50-1824-0014	1-3/4" - 2-1/4"
50-1824-0021	2-1/4" - 3-1/4"

Mounting screws not included.



Square Thumbturn and Plate
Supplied as standard on all locks with square rose sectional trim.
Thumbturn: Brass, Stainless Steel.
Plate: 1-1/2" (38mm).
Brass, Stainless Steel.

Part Number	Door Thickness
50-1824-0057	1-3/4" - 1-7/8"
50-1824-0058	2" - 2-1/8"
50-1824-0059	2-1/4" - 2-3/8"
50-1824-0060	Over 2-3/8" - 4-1/8" (specify)

Includes mounting screws.



GF1826 Plate for Privacy
Used for outside of 8802 Privacy Lock.
Plate: 1-7/8" (48mm) Diameter.
Brass, Stainless Steel.

Part Number	Door Thickness
50-1826-7003	All

Mounting screws not included.



GF1828 Blank Plate
For use on doors where thumbturn is no longer used.
Plate: 1-7/8" (48mm) Diameter.
Brass, Stainless Steel.

Part Number	Door Thickness
50-1826-7005	All

Mounting screws not included.



HA Thumbturn and Plate
Supplied as standard on all locks with HA lever and rose sectional trim.
Thumbturn: Cast Zinc.
Plate: 1-7/8" (48mm) Diameter.
Cast Zinc.

Part Number	Door Thickness
50-1824-0033	1-3/4" - 2"

Includes mounting screws.
Consult factory for other door thicknesses.

Specify part number x finish.

Mounting Screw Pack

No. 6 x 3/8" (10mm) type "AB", Oval Phillips Head sheet metal screw, stainless steel plated to match trim.

Part Number	Used With
81-9400-0041	GF1824, GF1826, GF1828

Specify finish required.

Copyright © 2004-2026, ASSA ABLOY Access and Egress Hardware Group, Inc. All rights reserved. Reproduction in whole or in part without the express written permission of ASSA ABLOY Access and Egress Hardware Group, Inc. is prohibited.
Patent pending and/or patent www.assaabloydss.com/patents.

Rabbeted Door Kits

The 8800 Series Mortise Lock can be installed on a pair of doors with a standard 1/2" (13mm) step rabbet. Kits are available which adapt these locks to the rabbeted doors. These kits contain a 1/2" (13mm) standard step rabbet strip for the active door, a strike, a strike box, and, depending on the door thickness, a strike lip. They are available for doors 1-3/4" (44mm), 2" (51mm) and 2-1/4" (57mm) thick. All components of these kits are reversible.

To order a complete ASSA ABLOY ACCENTRA® mortise lock with a Rabbet Door Kit, suffix the lock model number with a Rabbeted Door by door thickness, hand and finish required, i.e. AU8807 x Rabbeted Door x 1-3/4" x RH x 626.

Kits for rabbeted doors can be ordered by model number separately from the accompanying chart. When ordered separately, specify the finish required.

Door Thickness	Rabbeted Door Kit Model No.	Strike Model No.
1-3/4" 2"	RK245	22E

These kits contain the above components plus a No. 22D strike lip with attaching screws for doors above 2".

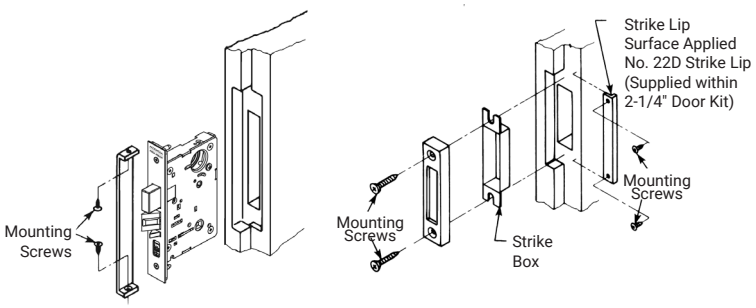

Emergency Key

E203
Used with 8802 privacy lock and 8862 bathroom lock for emergency access from outside.

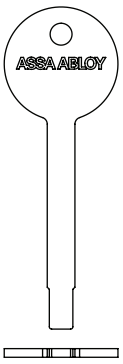

Copyright © 2004-2026, ASSA ABLOY Access and Egress Hardware Group, Inc. All rights reserved. Reproduction in whole or in part without the express written permission of ASSA ABLOY Access and Egress Hardware Group, Inc. is prohibited. Patent pending and/or patent www.assaabloydss.com/patents.

Handing The 8800 Mortise Lock

HANDING THE LATCHBOLT

1. Insert a flat blade screwdriver into cover slot.
2. Pull back on screwdriver until latchbolt extends past the base front.
3. Rotate head to desired position.

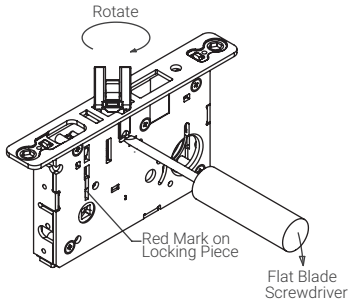

HANDING THE HUBS (LEVER OPERATION)

1. Locate the red mark on locking piece
2. The red mark indicates the locked side
3. Push toggle button to the "Unlock" position
4. With a flat blade screwdriver push red mark on locking piece to rotate locking piece 180° to the desired location
5. The locking piece must be fully rotated 180° for proper operation

Hand Of Doors

The outside is the key side of an entrance door or the corridor side of a room door. The outside of a single communicating door is the side opposite the hinges. The outside of twin communicating doors is the space between the doors.



Left Hand: Hinges on left, opens inward. For handed locks, specify LH.



Left Hand Reverse: Hinges on left, opens outward. For handed locks, specify LHR.



Right Hand: Hinges on right, opens inward. For handed locks, specify RH.



Right Hand Reverse: Hinges on right, opens outward. For handed locks, specify RHR.

Copyright © 2004-2026, ASSA ABLOY Access and Egress Hardware Group, Inc. All rights reserved. Reproduction in whole or in part without the express written permission of ASSA ABLOY Access and Egress Hardware Group, Inc. is prohibited.
Patent pending and/or patent www.assaabloydss.com/patents.

DIMENSIONS AND EXPLODED VIEWS

8800/SL8800 Series

- **Armor Front** - 8" x 1-1/4"
- **Door Thickness** - 1-3/4" standard, to 3-1/4" thick doors to order.
- **Deadbolt** - 1" throw, solid investment cast stainless steel.
- **Latchbolt** - 3/4" throw, stainless steel one-piece anti-friction.
- **Backset** - 2-3/4" only.
- **Case** - wrought steel, zinc dichromated.
- **Hubs** - 3/8" solid steel, fine-blanked and heat treated for additional strength.

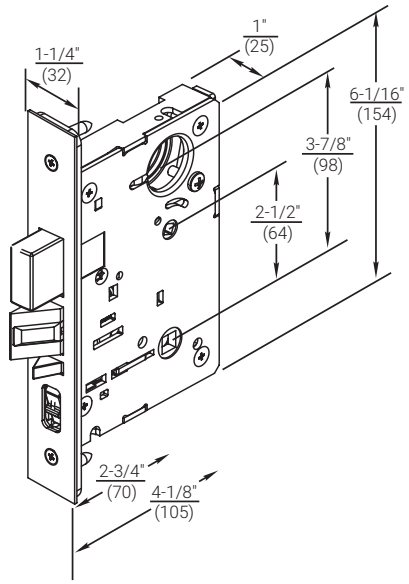

SL8800 Lever

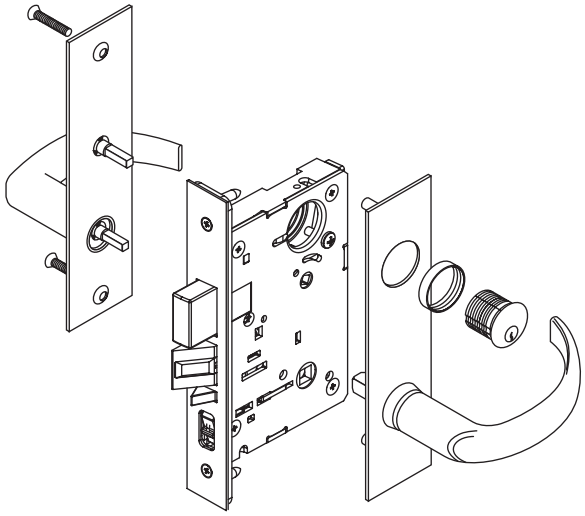

Standard Lever

Sectional

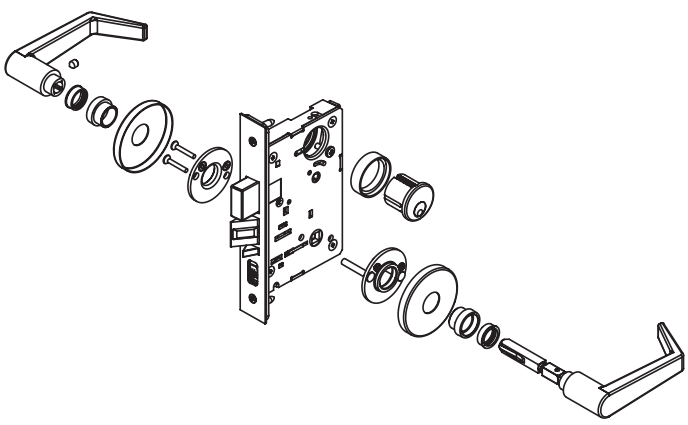

Escutcheon

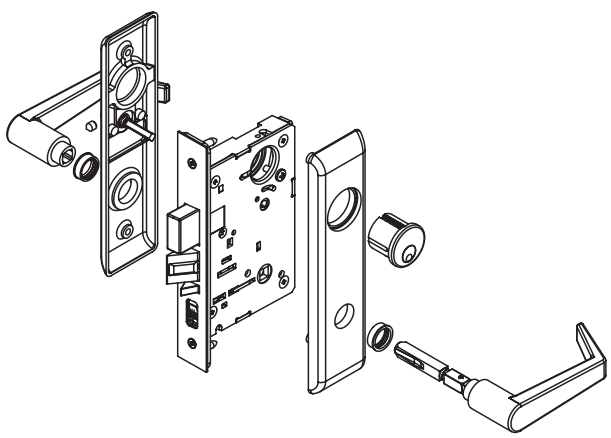

Copyright © 2004-2026, ASSA ABLOY Access and Egress Hardware Group, Inc. All rights reserved. Reproduction in whole or in part without the express written permission of ASSA ABLOY Access and Egress Hardware Group, Inc. is prohibited. Patent pending and/or patent www.assaabloydss.com/patents.

INSTALLATIONS

Reflections® Lever

Sectional

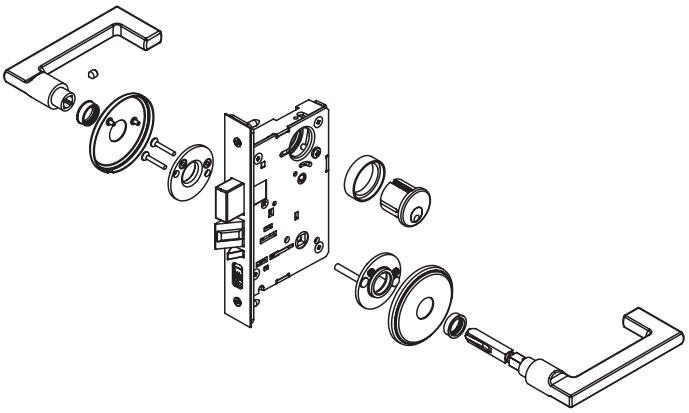

Escutcheon

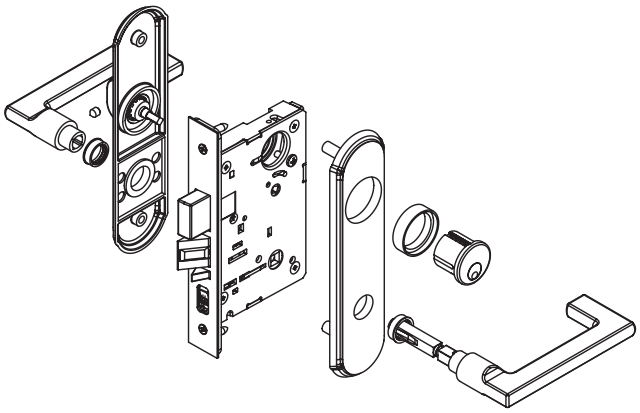

*When using Reflections levers with the CO rose, the rose adaptor is not used.
Levers will not install and/or properly operate if rose adaptor is included.

Knob

Sectional

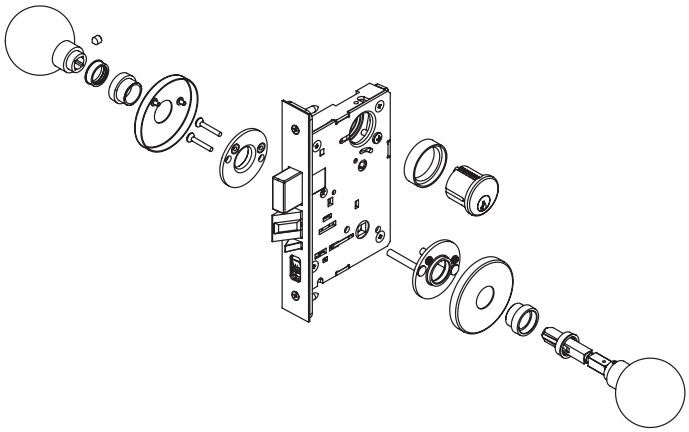

Escutcheon

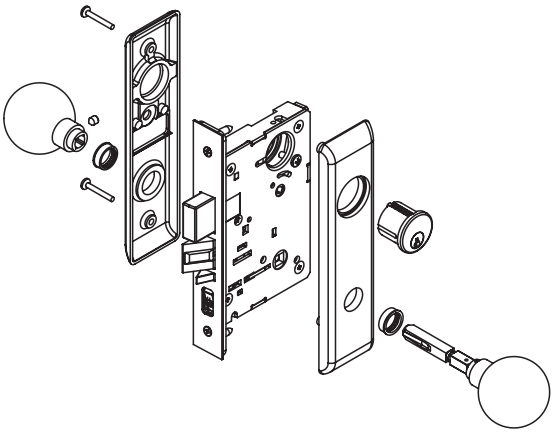

Copyright © 2004-2026, ASSA ABLOY Access and Egress Hardware Group, Inc. All rights reserved. Reproduction in whole or in part without the express written permission of ASSA ABLOY Access and Egress Hardware Group, Inc. is prohibited.
Patent pending and/or patent www.assaabloydss.com/patents.

ADA

The 8800 meets accessibility guidelines of the Americans with Disabilities Act and the requirements of the Uniform Federal Accessibility standards and ANSI 117.1, all requiring ease of accessibility.

ANSI/BHMA

Certified ANSI/BHMA A156.13, Series 1000, Operational Grade 1 (8800FL with CN escutcheon & SL8800 meet Security Grade 1).

Bevel Front

ASSA ABLOY ACCENTRA® 8800 series fronts are free-floating to adjust from flat to the standard bevel of 1/8" in 2".

Door Thickness

8800 Series Mortise Locks are supplied as standard for 1-3/4" thick doors. For other than standard, specify the door thickness on the order: (i.e. 2", 2-1/4", etc.)

Installation

ASSA ABLOY ACCENTRA® 8800 Series sectional and escutcheon trims feature thrubolted installation. Outside trim is held in place by threaded posts. For sectional trims, the posts fit through holes in the lock case and are secured by thrubolts from the inside trim. For escutcheon trims, the posts fit through the door and are secured by thrubolts from the inside trim. The posts fit through holes in the door, above and below the lock case, and are secured by thrubolts from the inside trim.

ISO 9001

Designed and manufactured under a certified ISO 9001 quality system.

Lead Shielding

All ASSA ABLOY ACCENTRA® 8800 Series Mortise Locks are available with a lead shield for installation in lead-lined doors. To order, suffix the lockset model number with "lead-lined."

Knurled Designs

Where required by the local authority, trim can be knurled to be identifiable to the touch for blind persons. CO knob design and all lever designs except HA and Reflections® trim may be ordered knurled.

Only the outside knob or lever will be knurled or abrasive coated unless specified otherwise. To order a complete lockset knurled or abrasive coated, suffix the lockset model number with one of the following codes, i.e AUCN x 8807FL x 626 x KNB.

Option	Description
KNB	Knurled both sides
KNI	Knurled inside only
KNO	Knurled outside only
ABCB	Abrasive coating both sides
ABCI	Abrasive coating inside only
ABCO	Abrasive coating outside only

Underwriters Laboratories (UL/cUL)

ASSA ABLOY ACCENTRA® 8800 Series Mortise Locks have been listed by Underwriters Laboratories Inc. for use on fire doors having a rating up to and including 3 hours and for use on 20 minute wood doors. This pertains to single swing doors not exceeding 4 feet in width and 8 feet in height and in doors mounted in pairs not exceeding 8 feet in either direction (unless otherwise noted in the individual listings.)

In general, single-point mortise locks or latches with 3/4" minimum latch throw are intended for the active leaf of doors mounted in pairs, with the inactive leaf provided with top and bottom flush or surface bolts of the manual, automatic, or self-latching type. The door Classification Marking specifies the minimum latch throw required for the individual door.

ASSA ABLOY ACCENTRA® 8800 Series Mortise Locks with 3/4" throw latchbolts may also be used on single swing doors rated 1-1/2 hours or less, up to 4 feet in width and 9 feet in height. This is in addition to the rating mentioned above. All 8800 Series Mortise Locks with Lever Handle Trim are UL listed for fire door applications. Underwriters Laboratories does not list locks with rabbeted fronts, locks with deadbolt only, or locks with hold-back feature on the latchbolt.

Note: Any retrofit or other field modification to a fire rated opening can potentially impact the fire rating of the opening, and ASSA ABLOY ACCENTRA® makes no representations or warranties concerning what such impact may be in any specific situation. When retrofitting any portion of an existing fire rated opening, or specifying and installing a new fire-rated opening, please consult with a code specialist or local code official (Authority Having Jurisdiction) to ensure compliance with all applicable codes and ratings.

Warranty

ASSA ABLOY ACCENTRA® 8800 Series mechanical mortise locks are protected by a ten (10) year warranty and 8800 Series electrified mortise locks have a two (2) year warranty.

Windstorm

Certified (refer to local codes).

Hurricane

Copyright © 2004-2026, ASSA ABLOY Access and Egress Hardware Group, Inc. All rights reserved. Reproduction in whole or in part without the express written permission of ASSA ABLOY Access and Egress Hardware Group, Inc. is prohibited. Patent pending and/or patent www.assaabloydss.com/patents.

NOTES

Copyright © 2004-2026, ASSA ABLOY Access and Egress Hardware Group, Inc. All rights reserved. Reproduction in whole or in part without the express written permission of ASSA ABLOY Access and Egress Hardware Group, Inc. is prohibited.
Patent pending and/or patent www.assaabloydss.com/patents.

The ASSA ABLOY Group is the global leader in access solutions. Every day, we help billions of people experience a more open world.

ASSA ABLOY Opening Solutions leads the development within door openings and products for access solutions in homes, businesses and institutions. Our offering includes doors, frames, door and window hardware, mechanical and smart locks, access control and service.

ACCENTRA®

ASSA ABLOY

TECHNICAL SUPPORT
(troubleshooting, product use and application, returns)
Tel: 855-557-5078
Email: techsupport.accentra@assaabloy.com

CUSTOMER SUPPORT
(orders, product configuration, pricing, lead-time)
Tel: 855-557-5078 x2
Email: Customerservice.Accentra@assaabloy.com

U.S.A.:
ASSA ABLOY ACCENTRA®
225 Episcopal Road
Berlin, CT 06037-4004
Tel: 1-800-438-1951
Fax: 1-800-338-0965
www.accentra-assaabloy.com

Canada:
ASSA ABLOY Door Security Solutions Canada
160 Four Valley Drive
Vaughan, Ontario L4K 4T9
Tel: 1-800-461-3007
Fax: 1-800-461-8989
assaabloydss.ca

International:
ASSA ABLOY Americas International
Tel: 1-905-821-7775
Fax: 1-905-821-1429
assaabloyai.com

ASSA ABLOY ACCENTRA® is a brand associated with ASSA ABLOY Access and Egress Hardware Group, Inc., an ASSA ABLOY Group company. Copyright © 2004-2026, ASSA ABLOY Access and Egress Hardware Group, Inc. All rights reserved. Reproduction in whole or in part without the express written permission of ASSA ABLOY Access and Egress Hardware Group, Inc. is prohibited. 42002-09/26