H28 Series Floor Closer w/ 587 Arm

Center Hung, Single Acting, Handed

H340 Top Pivot, Non Handed

Installation Instructions

NORTON RIXSON

ASSA ABLOY

WARNING

This product can expose you to lead which is known to the state of California to cause cancer and birth defects or other reproductive harm. For more information go to: www.P65warnings.ca.gov.

READ AND FOLLOW ALL INSTRUCTIONS.
SAVE THESE INSTRUCTIONS.

CAUTION

Incorrectly installed or improperly adjusted product can cause property damage or personal injury. These instructions should be followed to avoid the possibility of misapplication or misadjustment.

Template

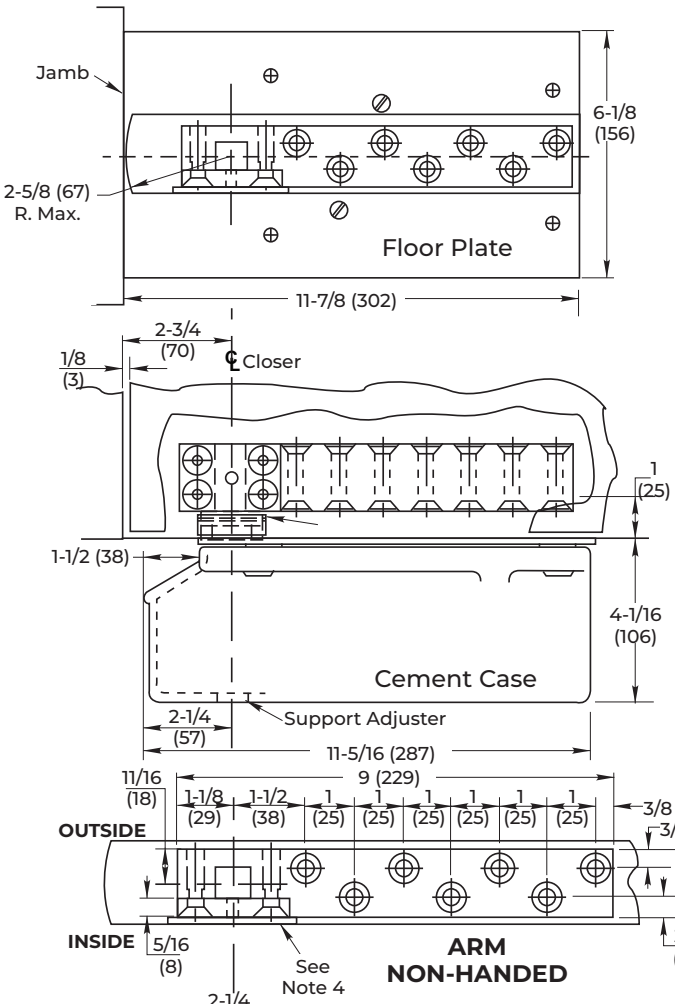

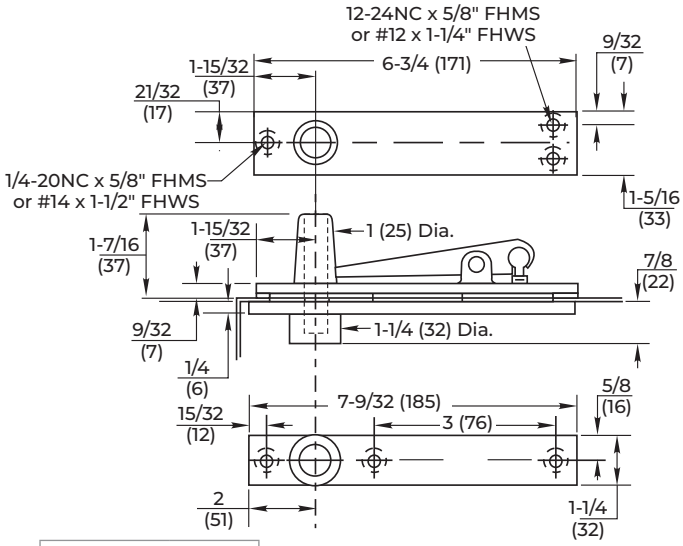

Max. Door Clearance	
Floor Plate	1 (25)
1/2 Threshold	5/8 (16)
1/4 Threshold	7/8 (22)

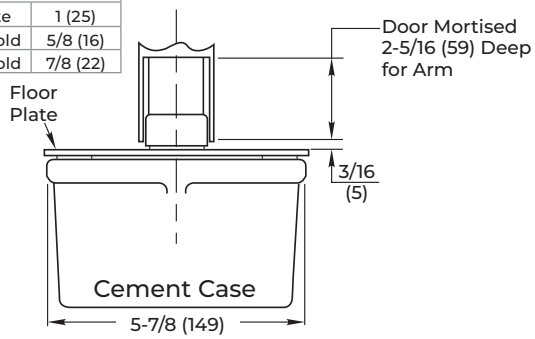

WITH FLOOR PLATE
Set Cement Case 1/8" (3mm) Below Surface of Finished Floor

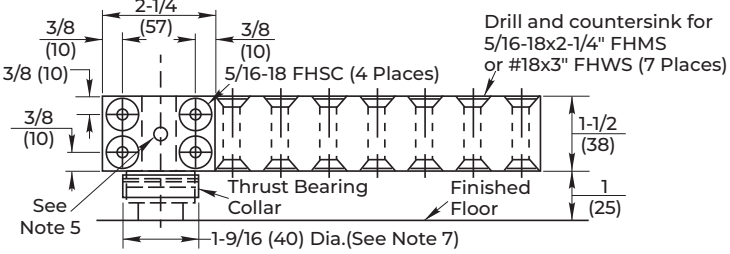

Door Mortised Deep for Arm	A
1/4 Threshold	2-3/16 (56)
1/2 Threshold	1-15/16 (49)

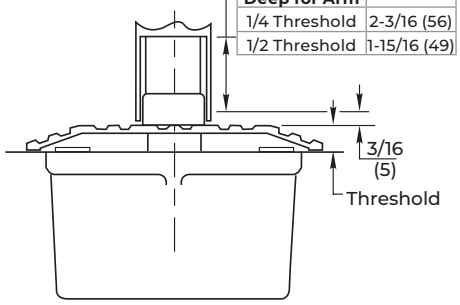

WITH THRESHOLD
Set Cement Case Flush with Finished Floor

NOTES:

1. Do not scale drawing.
2. Suitable reinforcing by others.
3. For wood doors, predrill arm and top pivot holes to prevent splitting.
4. Door must have removable panel (by others) for access to arm screws. Removable panel must be on inside of door.
5. Drill and tap for #8-32 machine screw, centered (screw by others).
6. All dimensions given in inches (mm).
7. Door cutout needed for thrust bearing collar.

Copyright © 2006, 2009, 2024, 2025, ASSA ABLOY Accessories and Door Controls Group, Inc. All rights reserved. Reproduction in whole or in part without the express written permission of ASSA ABLOY Accessories and Door Controls Group, Inc. is prohibited

IS2800587 Rev 4 09/25

Approved 2025-09-18

Experience a safer and more open world

H28 Series Floor Closer w/587 Arm

Center Hung, Single Acting, Handed
H340 Top Pivot, Non Handed

Preparing for Installation

Determine Hand of Door:

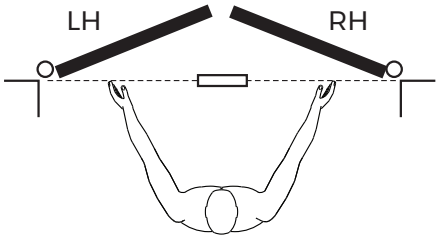

Face a door swinging open away from you.
If the door opens to the right, it is right hand.
If the door opens to the left, it is left hand.

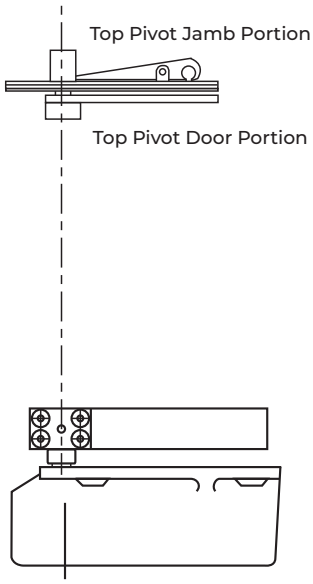

IMPORTANT:
Use plumb line to make sure that center line of top pivot pin lines up with center line of closer spindle.

Installation Instructions

A. Locating Closer

1. Measure 2-3/4" (70mm) out from door jamb on centerline of door. This is the location of the spindle center.

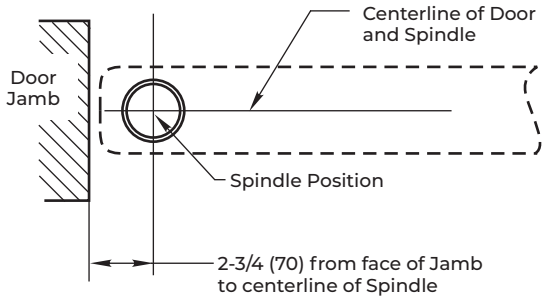

B. Install Cement Case in Floor

1. For floor plate application: Cement case is set 1/8" (3.2mm) below floor level.
2. For threshold application: Cement case is set flush with floor.
3. Set cement case in floor and block in position.
4. Case should be parallel with center line of door.
5. CEMENT CASE SHOULD BE LEVEL. Place levels per Illustration.
6. Grout in cement case with closer. Cement should not get between closer and case.

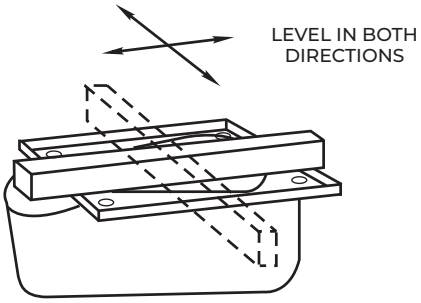

Copyright © 2006, 2009, 2024, 2025, ASSA ABLOY Accessories and Door Controls Group, Inc. All rights reserved. Reproduction in whole or in part without the express written permission of ASSA ABLOY Accessories and Door Controls Group, Inc. is prohibited

IS2800587 Rev 4 09/25
Approved 2025-09-18

Installation Instructions (cont.)

C. Install Pivot and Closer Arm.

1. Install top pivot in door per template.
2. Install top pivot in jamb per template.
3. Centerline of pivot pin should line up with centerline of spindle. Use plumb line to assure accuracy.
4. Mortise door for arm.
5. Install arm in bottom of door.

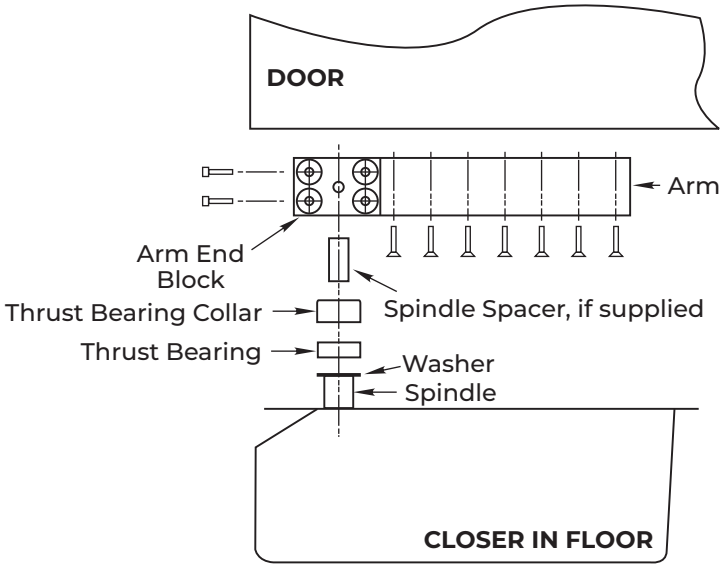

D. Hang Door.

CAUTION: Closer is shipped with valve screws down. DO NOT FORCE VALVE DOWN.

1. Retract top pivot pin by turning retracting pin screw counter-clockwise. (see illustration)
2. Turn spindle to 30° open position. (see illustration)
3. Slide door on spindle. DO NOT ATTEMPT TO CLOSE DOOR.
4. Attach arm cap, but do not tighten.
5. Line up two portions of top pivot and turn pin retracting screw clockwise.
6. Tighten arm end block screws.
7. Open door to 60° or more and open screw valve by turning screw counterclockwise. Door will then close.

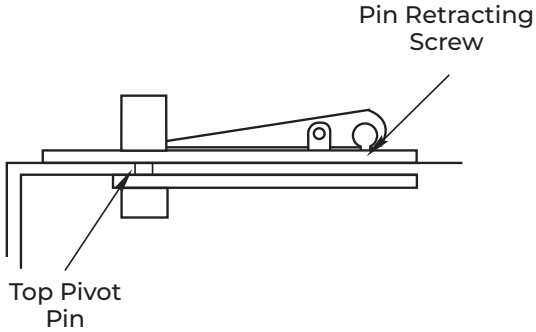

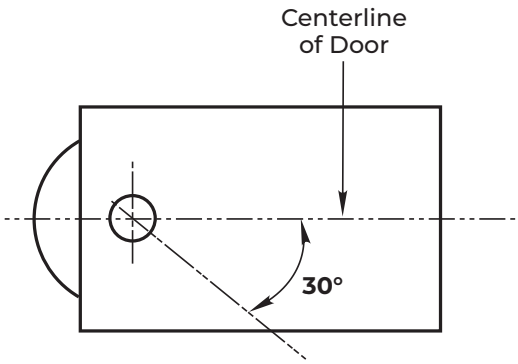

Copyright © 2006, 2009, 2024, 2025, ASSA ABLOY Accessories and Door Controls Group, Inc. All rights reserved. Reproduction in whole or in part without the express written permission of ASSA ABLOY Accessories and Door Controls Group, Inc. is prohibited

The ASSA ABLOY Group is the global leader in access solutions. Every day we help people feel safe, secure and experience a more open world.

NORTON RIXSON

ASSA ABLOY

Closer Adjustment

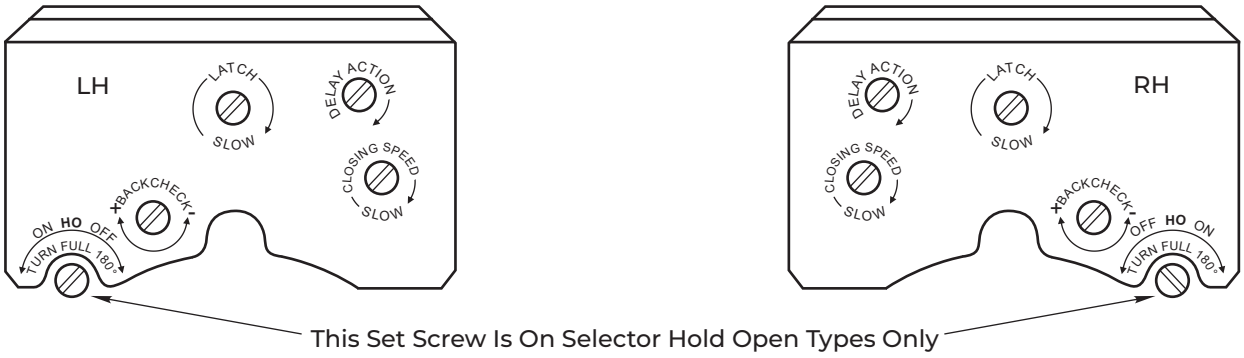

Closing speeds can be adjusted to suit local conditions and requirements. Label on closer face designates the purpose of each adjustment screw. Adjustments are for speed control.

1. The Delay Action valve allows adjustment from full open to 65° closed position. (Optional)
2. The Closing Speed valve allows adjustment from full open to 15° on units without the Delay Action feature.
3. The Closing Speed valve allows adjustment from 65° to 15° closed position on closers with Delay Action feature.
4. Latch valve allows adjustment from 15° to closed position.

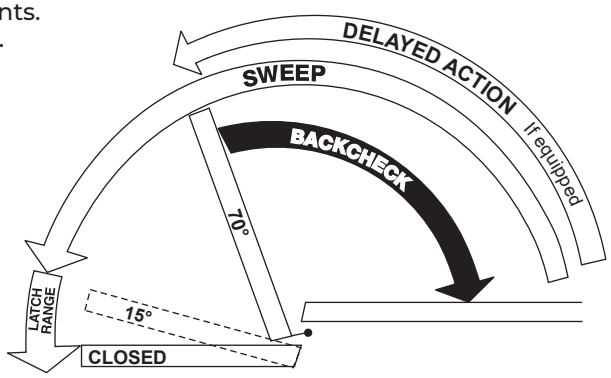

IMPORTANT:
- Backcheck adjustment must be adjusted to vary resistance from light to firm at 60° of door open.
- Do not use Backcheck as deadstop. Backcheck is an intensity valve, not speed control.

Closer Type

This closer is one of three (3) types as follows:

1. Non-hold open factory set: No hold open adjustments.
2. Automatic hold open factory set: No hold open adjustment.
3. Selective (on-off) hold open: Label will indicate position of on-off selector screw.
   When turned “on”, closer has automatic hold open.
   When turned “off”, hold open will not function. Turn full 180°.

Spring Power Adjustment

This closer can be adjusted for increased or decreased spring power.

These adjustments if required should be done by an authorized repair agency.

Technical Product Support:
Monroe, NC 28112 USA
Phone: 877.974.2255 ext: 2
Techsupport.NortonRixson@assaabloy.com
NortonRixson.com

Norton Rixson is a brand associated with ASSA ABLOY Accessories and Door Controls Group, Inc., an ASSA ABLOY Group company.
Copyright © 2006, 2009, 2024, 2025, ASSA ABLOY Accessories and Door Controls Group, Inc. All rights reserved. Reproduction in whole or in part without the express written permission of ASSA ABLOY Accessories and Door Controls Group, Inc. is prohibited

IS2800587 Rev 4 09/25

Approved 2025-09-18