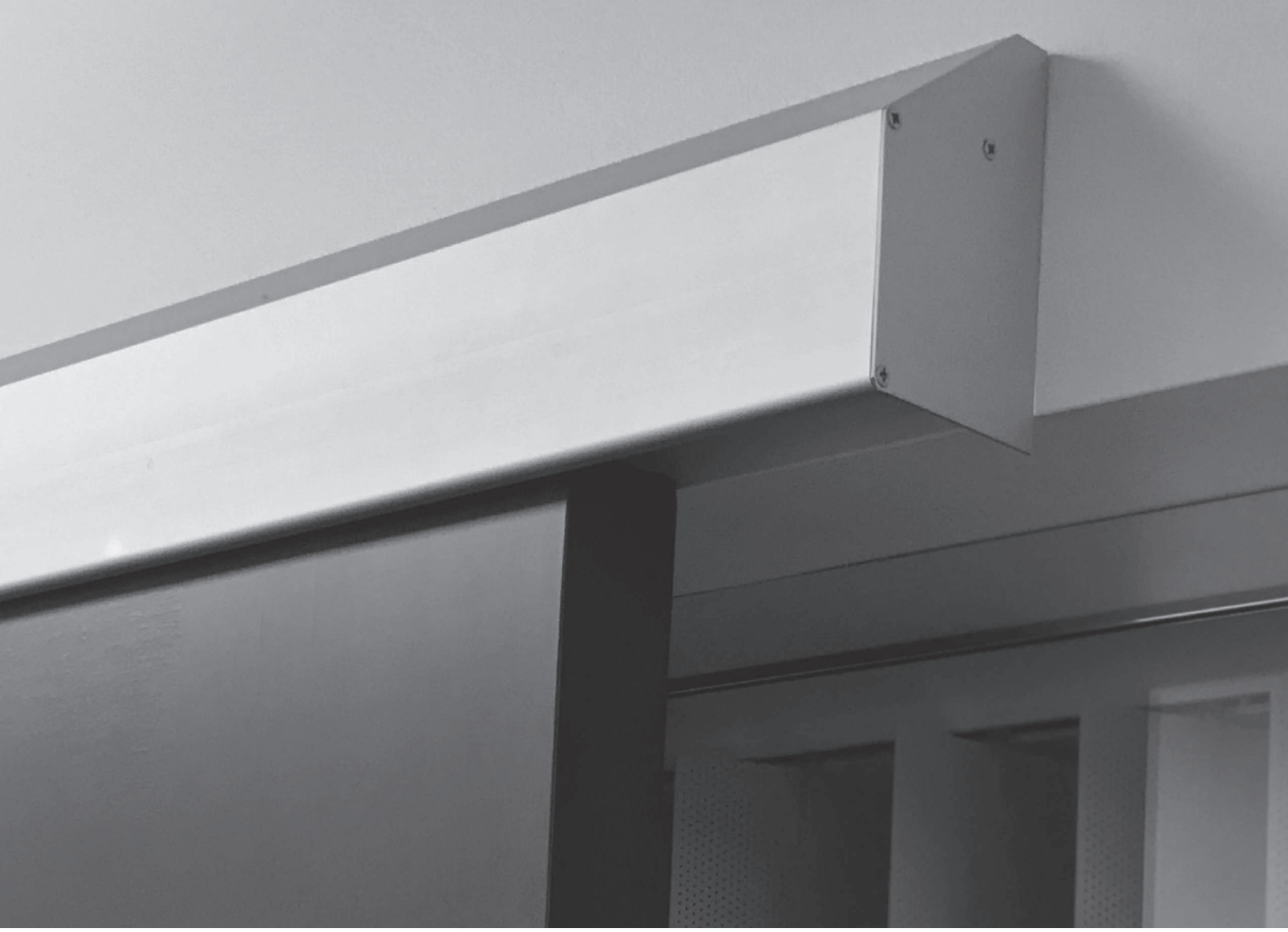







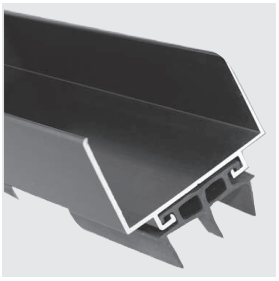

MARKAR AND PEMKO CATALOG

PEMKO

ASSA ABLOY

Experience a safer
and more open world

© 2015, 2017 - 2025 ASSA ABLOY Accessories and Door Controls Group, Inc.

General Information: 2

About the Pemko Product Line 8
The West Coast Stocking Program 9
General Information & Terms 10
Materials & Finishes Information 12
Product Testing / Classification Symbols 13
Barrier-Free Systems 15
ANSI/BHMA Standards 16
Excessive Gap Products 17

Markar Continuous Pin and Barrel Hinges: 19

General Information 20
Hinge Finishes 22
Hinge Numbering System and Standard Lengths 23
Continuous Hinge Modifications 24
3500 Series Stainless Steel Pin and Barrel Security Hinges 27
300 Series Stainless Steel Pin and Barrel Hinges 31
300 Series Stainless Steel Edge Guards 47
200 Series Carbon Steel Pin and Barrel Hinges 51
100 Series Aluminum Pin and Barrel Continuous Hinges 53
900 Series Toilet Partition Hinges 55
400 Series Toilet Partition Hinges 57
Pivots 59
Flat Astragals 60
Fasteners and Fastener Packs 61
Tools, Parts, and Accessories 65
Custom Lengths 66

PemkoHinge® Geared Continuous Hinges: 67

What is PemkoHinge®? 68
Ordering Chart 68
BHMA Certification Program 69
Hospital Tip 69
Cycle Requirements and Weight Bearing 69
UL Fire Labeling 69
Options for Electrically Modified Continuous Geared Hinges 70
X-Series PemkoHinge® 71
Offset Hinges 72
Full Mortise Hinges 73
Special Full Mortise Hinges 74
Kawneer Full Mortise Hinges 75
Raised Gear Hinge 75
Full Mortise Safety Hinges 76
Wide Throw Full Mortise Hinges 77
Wide Throw Half Surface Hinges 77
Half Surface Hinges 78
Half Mortise Hinges 78
Full Surface Hinges 79
Full Surface Center Pivot Hinges 79
Full Surface Balanced Pivot Hinge 79
Full Mortise Residential Hinges 80
Firepins™ 81
Double Swing Hinge 82
Emergency Release Stop 82
Power Transfer Units 84

Commercial Thresholds: 85

Saddle Thresholds 86
Half Saddle Thresholds 91
Offset Saddles and Offset Half Saddles 93
Stainless Steel Saddles 94
Thermal Break Saddles 95
Stainless Steel Thermal Break Threshold 98
Latching Panic Exit Saddles 99
Latching Panic Exit Saddles - Thermal Break 103
Acoustic Thresholds 106
Threshold with Flexible Joint 106
Concealed Fastener Thresholds 107
Eco-V™ Thresholds 108
Adjustable-Width Eco-V™ Threshold 109
Heavy Duty Latching Panic Exit Saddle Threshold 110
Heavy Duty Thresholds 110
Modular Heavy Duty Thresholds 111
Water Return Thresholds 112
Floor Plates/Safety Treads 113
Aluminum Plates 114
Carpet Separators 115
Floor Plate Supports/Accessories and Elevators 116
Threshold Stop Strips 117
Floor Closer Thresholds/Cover Plate Assemblies 118
ANSI/BHMA A156.21 Thresholds - Cross Reference 119

Modular Ramps: 123

Ramp Ordering Information 124
Modular Ramp Threshold Assemblies - Flush Applications 125
Modular Ramp Threshold Assemblies - Offset (7" Top Plate) 126
Modular Ramp Threshold Assemblies - Offset (3½" Top Plate) 127
Modular Ramp Threshold Components 128
Modular Ramp Threshold Assemblies - Variables 129
Risers for Modular Ramps 129
Miter Returns For All Modular Ramp Thresholds 130
Barrier-Free Ramp Thresholds 131
Fire Retardant and Styrene Butadiene Rubber Ramp Thresholds 132
Recycled Rubber Ramp Assembly 133

Door Bottoms: 135

Automatic Door Bottoms 136
Residential Automatic Door Bottoms 140
End Plates for Automatic Door Bottoms 141
Excessive Gap Door Bottom Solutions 142
Excessive Gap Door Top Solutions 142
Eco-V™ Door Shoes 142
Door Shoes 143
Thermally Broken Door Shoe 145
Door Sweeps for Hollow Metal Doors 146
Fabrication Options for Door Shoes 146
Door Bottom Sweeps 147
Stainless Steel Door Bottom Sweeps 151
Specialty Door Bottoms 152
Door Top Weatherstrip 152

Astragals & Meeting Stiles: 153

Astragal and Meeting Stile Gasketing - Split Astragals 154
Split Astragals with Snap Covers – Concealed Fasteners 156
Meeting Stile Gasketing 156
Meeting Stile Gasketing/Excessive Gap Meeting Stile 157
Adhesive Astragal/Meeting Stile Seals 158
Adjustable Astragals 158
"T" and Overlapping Astragals 159
Security Astragal 160
Adhesive-Backed Mullion Gasketing 160
Adhesive-Backed Astragal Seal 160
Offset Security Bar 160
Locking Astragals 161

Brush Gasketing: 163

180° Aluminum Retainers 164
180° Concealed Fastener Retainers 165
90° Aluminum Retainers 166
45° Concealed Fastener Retainers 166
Mortise Retainers 168
Aluminum Retainer with Rain Drip 168
Oak Retainers 168
Meeting Stiles 169

PEMKO
ASSA ABLOY

Experience a safer and more open world

800-824-3018 | www.pemko.com
Check the web site for the up-to-date catalog

Copyright © 2015-2025, ASSA ABLOY Accessories and Door Controls Group, Inc., an ASSA ABLOY Group company. All rights reserved. Reproduction in whole or in part without the express written permission of ASSA ABLOY Accessories and Door Controls Group, Inc. is prohibited.

Perimeter Gasketing: 171
Standard Perimeter Gasketing 172
Perimeter Gasket Solutions for Sliding Doors 175
Stainless Steel Perimeter Gasketing 176
Adjustable Jamb Gasketing 177
Heavy Duty Interlock Perimeter Gasketing 177
Heavy Duty Perimeter Gasketing - Head Section 178
Heavy Duty Perimeter Gasketing - Standard Jamb 179
Perimeter Gasket Jamb Brackets 179
Snap Cover Perimeter Gasketing With Concealed Fasteners 180
Kerf-In Weatherstrip 181
Magnetic Weatherstrip 182
Adhesive Perimeter Gasketing 182
MicroShield® Antimicrobial Adhesive Gasketing 183
Excessive Gap Perimeter Solutions 184
Interlock Weatherstrip For Wood Windows 184
Interlock Weatherstrip For Wood Doors 185
Cushion/Spring Weatherstrip 185
Fasteners for Cushion, Spring and Interlock Weatherstrip 185
Privacy Seals for Sliding Doors 186

Adhesive Gasketing: 187
SiliconSeal Adhesive-Backed Fire/Smoke Gasketing 188
PemkoPrene® Adhesive-Backed Fire/Smoke Gasketing 189
SiliconSeal Adhesive-Backed Meeting Stile Gasketing 189
MicroShield® Antimicrobial Gasketing 190
Hot Smoke Seal/SiliconSeal Combination Fire/Smoke Sealing 190

Hospitality Products: 191
Privacy Door Latch, Bracket and Decals 192
SiliconSeal Adhesive Gasketing 193
Automatic Door Bottoms: Acoustic 194
Door Shoes 194
Acoustic Adhesive Corner Pads 194
Automatic Door Bottoms 195
Eco-V™ Thresholds 196
Adjustable-Width Eco-V™ Threshold 197
Stainless Steel Sliding Track Hardware System 198
Cascading Door with Sample Configurations 199
SHS80 System 200
Bypass Track Series 201

Acoustic Products: 203
Basic Acoustic Information 204
Acoustic Seal Sets 206
Acoustic Thresholds 207
Saddle Thresholds 208
Automatic Door Bottoms - Acoustic 209
Door Shoes 209
Acoustic Adhesive Corner Pads 209
Standard Perimeter Gasketing 210
SiliconSeal Adhesive-Backed Gasketing 210

Pemko Sliding & Folding Hardware: 211
H180A Series 212
SHS80 Series 213
Sliding 200 Series 214
Side Wall Track (SWT) System 215
Bypass Track Series 218
SIM200A Series 219
LP200 Series 220
LBP75A 221
Sirocco Series 222
H440A-OH Series 223
H440A-SW Series 224
TBS200A-OH Series 225
TBS200A-SW Series 226
TBS250A-OH Series 227
TBS250A-SW Series 228
H600S-OH Series 229
H600S-SW Series 230
H800S-OH Series 231
H800S-SW Series 232
H1100A-OH Series 233
H1100A-SW Series 234
Pocket Frame Kit 235
Folding 100 Series 236
Pacer Interior End Fold Series 237
Hide Slide 238
Flexirol Interior End Fold Series 239
Stainless Steel Sliding Track Hardware System for Wood Doors 240
Builders Series Flat Track for Wood Doors 248
Designer Series Flat Track for Wood Doors 251
SIM 150 - 2 Door 253
SIM 150 - 3 Door 254
Cascading Door with Sample Configurations 255
PemkoMatic™ Sliding Door Operator 256
PemPass™ 257
Options and Accessories 259
Privacy Seal Sets 259
Soft Close Systems 260

Residential Thresholds: 263
Interlocking Thresholds and Caps 264
Interlocking Thresholds - Water Return 265
Interlocking Hooks 265
Adjustable Eco-V™ Top Thresholds 266
Eco-V™ Top Thresholds 266
Residential Saddles 266
Bumper Thresholds for Outswing Doors 267
Squareback Thresholds 267
Sill Nosings 268
Adjustable Aluminum Top Sills 269
Adjustable Oak Top Sills 270
Outswing Adjustable Oak Top Sills 271
Residential All-Aluminum Adjustable Sills 271
Fixed Eco-V™ Top Residential Sills 272
Residential All-Aluminum Fixed Sills 272
Outswing Fixed Bumper Sills 273
Extenders For All Residential Sills 273

Floor Molding, Trim, & Handyshapes™: 275
Carpet Bar and Seam Binding 276
Stair Nosing 276
Oak Seam Binding, Floor Edging, and Carpet Trim 276

Weatherization Products: 277
Foam Tape 278
Neoprene Tape 278
Miscellaneous Tape 279
Spring Bronze Weatherstrip 279
Garage Door Weatherstrip 279

Fire Glazing Tape: 281
Fire Glazing Tape 282
Fire Glazing Tape Applications 283

Door & Frame Accessories: 289
Glazing Bead/Spreader Bar 290
Reinforcements - Fillers 290
Reinforcements - Misc. 291

Copyright © 2015-2025, ASSA ABLOY Accessories and Door Controls Group, Inc., an ASSA ABLOY Group company. All rights reserved.
Reproduction in whole or in part without the express written permission of ASSA ABLOY Accessories and Door Controls Group, Inc. is prohibited.

PEMKO
ASSA ABLOY
Experience a safer and more open world

Product	Index
1A/301	230
1A/301/EC	229
1A/550	234
1AX/301	230
1AX/301	232
1B	224
1BX	224
2	13
2P	184
3A/301	229
3A/301	231
3AX/301	229
3AX/301	231
4C	184
4P	184
10	10
10	184
14/1	114
18/1	114
21/550/P	239
21BO/4	237
21B/P	237
21N/94	237
21R/94	239
30	8
41M	185
43	185
52	11
56	148
57	148
57A/N	231
57A/S	229
57B	223
61	265
62	240
66	265
68	152
70C-100	185
70E-99	185
72	243
73	185
74	185
75	185
82	244
94A	212
94A	236
94A	259
101	264
102N	212
102N	240
102N	248
102N	259
102WA	212
102WA	214
102WA	215
102WA	219
102WA	224
102WA	232
102WA	259
102WN	212
102WN	219
102WN	224
102WN	230
102WN	232
102WN	248
106HF/94	236
106N/94	259
106R/94	212
106R/94	259
108	264
110	264
111	245
114	264
120	264
136	265
142	265
145	265
146	265
149	267
151	86
151	208
154	88
154	208
154SS	94
157	93
158	93
159	101
166	88
169	88
170	88
171	89
172	89
173	86
174	115
175	88
175	208
175SS	94
176	89
176	118
176x170	118
176x171	118
177	101
179	100
181	101
182	93
183	116
184	117
185	102
190	113
191	113
192	113
193	113
193x2/195	118
195	116
196	116
200	116
206	266
208	266
209	143
210	143
211	143
212	266
215	143
216	143
216_FG	145
217	143
218	266
219	266
221	145
222	146
223	144
227	113
228	113
229	113
230	115
234	143
236	115
249	266
250	266
252	92
252x2_FG	96
252x2SSFG	98
252x3_FG	96
252x3SSFG	98
252x4SSFG	98
252x226	102
252x226_FG	103
253	92
253x3_FG	96
253x3SS FG	98
253x4_FG	96
253x4SS FG	98
253x6_FG	97
253x226_FG	103
254	92
254x4	90
254x4_FG	97
254x4SS FG	98
254x4x170	118
254x4x171	118
254x5_FG	97
254x226	102
254x226_FG	103
255	92
255x5	90
255x5_FG	96
255x 226	102
255x226_FG	103
256	92
256x6	90
256x6_FG	95
257	131
257x259	118
257x259	131
259	131
270	86
271	86
272	86
273	91
273x3_FG	95
273x4_FG	95
273x224_FG	104
273x292_FGPK	105
274	91
274x4	87
274x4_FG	95
274x4x270	118
274x4x271	118
274x224_FG	104
274x292_FGPK	105
276	87
276	118
276x270	118
276x271	118
277	100
278	91
278x224_FG	104
278X292_FGPK	105
279	91
279x224_FG	104
279x292_FGPK	105
280	212
280	219
280	236
280A-SWT	215
280_-SWF	215
280_SWTKIT	215
281	213
281	219
281	236
281	259
282	116
282HD	236
283	116
283	236
285	174
287R1-KIT	212
287R1-KIT	214
287R1-KIT	215
287R1-KIT	218
289B	236
289T	236
290	117
290	179
294	175
296	174
297	154
297	172
300	157
301	229
303	154
303	172
303	210
305	154
305	173
305SS	154
305SS	176
306	175
307	148
308	148
309	175
310	155
311CIN	155
312	174
312	210

Copyright © 2015-2025, ASSA ABLOY Accessories and Door Controls Group, Inc., an ASSA ABLOY Group company. All rights reserved. Reproduction in whole or in part without the express written permission of ASSA ABLOY Accessories and Door Controls Group, Inc. is prohibited.

Product	Index
313	152
313	156
314	152
314	156
315	147
315	174
315	210
315SS	151
315SS	176
316	155
316	172
317	152
319	173
319SS	176
321	147
321SS	151
322	177
324	268
325XGSS	17
325XGSS	142
326	268
327	268
330	174
332	173
335	177
336	177
344	152
345	148
345	149
345	168
346	152
347	152
350	177
351	158
353	160
354	158
355	159
356	159
357	159
359	159
368	147
369	157
375	159
375	173
379	177
394	175
394	186
403/2	237
405	140
411	139
411	195
412	138
420	139
434	139
550A	233
550A	239
556/21	239
556/57	233
566	93
566x3_FG	97
573x5_FG	106
600A	223
600A	237
601H	199
601H	213
601H	219
601H	255
601H	259
601P	223
650	107
651	107
671	107
766	93
766x3_FG	97
950	175
950	186
987	11
1075C	212
1076	199
1076	255
1547	88
1547	208
1710	89
1715	110
1716	111
1717	111
1718	111
1719	111
1745	112
1842	117
1855	101
1951	115
2001	99
2002	99
2005	99
2006	99
2006STC	106
2006STC	207
2008	106
2008	207
2009	100
2009	207
2010	100
2051	267
2052	267
2053	267
2054	267
2113	144
2113	194
2120	276
2132W	276
2134	276
2170	142
2173	144
2173	194
2211	145
2212	145
2212	209
2219	276
2219W	276
2221	146
2266	113
2286	113
2343	144
2343	194
2364	115
2548	89
2548	118
2548x170	118
2548x171	118
2549	90
2550	90
2555	92
2565	92
2705	110
2715	110
2716	110
2727	93
2746	91
2746x6	87
2746x6_FG	95
2746x292_FGPK	105
2748	87
2748	118
2748x270	118
2748x271	118
2749	87
2750	87
2755	91
2802	199
2802	218
2802	255
2802BT	218
2802BT	259
2803	253
2812	199
2812	218
2812	255
2812	259
2815_M	182
2891	178
2892	178
2893	178
2902	179
2903	179
3151	147
3151	174
3151SS	151
3261	268
3452	148
3452	149
3452	168
3493	160
3494	160
3572	160
3692	144
3692	194
3692	209
4131	138
4131	195
4301	138
5025	168
5041	168
5061	168
5100	168
5110	160
8451	273
8452	273
18041	155
18041	165
18041	169
18050	165
18061	149
18061	155
18061	165
18061	169
18062	165
18062W	168
18100	149
18100	165
18100_NBE	150
18100W	168
18137	149
18137	164
18175	164
18250	164
18400	164
19125	114
29310	156
29310	180
29313	180
29324	156
29324	165
29324	169
29326	156
29326	165
29326	169
29326	180
29344	166
29344	180
29346	166
29346	180
29394	175
29394	186
45041	167
45061	167
45062	167
45100	167
45137	167
45175	167
45250	167
45400	167
74518	271
75518	271
84514	272
85514	272
90041	166
90062	149
90062	166
90100	149
90100	166
90100_NBE	150
90137	166
94518	269
94518_W	270

Copyright © 2015-2025, ASSA ABLOY Accessories and Door Controls Group, Inc., an ASSA ABLOY Group company. All rights reserved.
Reproduction in whole or in part without the express written permission of ASSA ABLOY Accessories and Door Controls Group, Inc. is prohibited.

PEMKO
ASSA ABLOY
Experience a safer and more open world

Product	Index
95518	269
95518_W	270
293100	165
293100_NB	149
293100_NBE	150
293100_V	150
ACP112	194
ACP112	209
ADJ232V8	109
ADJ232V8	197
ADJ232V14	109
ADJ232V14	197
ADJ232x2325V8	109
ADJ232x2325V8	197
AM88	183
AM88	190
B1923	59
BAR	240
BKT050	179
BKT075	179
BRACKET2	240
CB1-50PK	290
CR2-5PK	291
DSH	83
DSH1000	82
EG308	47
EGA305xG	142
EGA305XG	17
EGC308	48
EGL308	49
EGT308	50
EL-CEPT	84
EL-EPT	84
EL-EPTL	84
EL-EPT-SC	84
EPD3	212
EPD3	218
EPD3	240
EPD3	248
EPD3	253
ERS	82
ERSBH	82
ERSMP	82
EV80	142
EV232	108
EV232	196
EV2320	108
EV2320	196
EV2322	108
EV2322	196
EV2325	108
EV2325	196
EV2326	108
EV2326	196
EXT2	273
EXT3	273
EXT3/4	273
EZGAP™ XG10	17
EZGAP™ XG10	184
F134	212
F134	218
F134	253
F134	259
F160C	223
F160ECP	223
F200C	224
F200ECP	224
FA68	60
FA70	60
FA80	60
FG3000S45	282
FG3000S45	283
FG3000S45	284
FG3000S45	285
FG3000S45	288
FG3000S90	282
FG3000S90	286
FG3000S90	287
FIF2/275A	239
FM	73
FM100	53
FM200	51
FM300	31
FM300WT	32
FM300WT	33
FM400	57
FM900	55
FM3500	27
FM_RG	75
FM_SF	76
FM_SLF	73
FM_SLF138	76
FM_SLI	73
FM_SLISF	76
FS	79
FS102	54
FS301	34
FS302	35
FS402	58
FS902	56
FS910	56
FS3501	28
FS3502	29
FS_CP	79
FS/SC309	40
GS2-20PK	290
GS3-20PK	290
GS4-20PK	290
H180A	212
H200	214
H200	215
H200PACK	214
H200PACK	215
H200PACK	259
H222R1	199
H222R1	212
H222R1	235
H222R1	255
H440A-OH	223
H440A-SW	224
H600S-OH	229
H600S-SW	230
H800S-OH	231
H800S-SW	232
H1100A-OH	233
H1100A-SW	234
HBP200A	201
HBP200A	218
HF2/100	236
HF2/100PACK	236
HF2/100PACK	259
HF3-25PK	290
HF4/100	236
HG305	38
HG305WT	39
HG310	41
HG311	42
HG315	43
HG323	44
HG326	45
HG329	46
HG3505	30
HH3/301	229
Hide Slide	238
HM	78
HM304	37
HS	78
HS203	52
HS303	36
HSS20XGxS773	18
HSS20XGxS773	184
HSS2000	190
HSS2000	287
HSS2000xS44	190
HSS2000xS88	190
HSS7750	190
HSS7850	190
HS_SF	78
K28_-SWEP	215
K134EP	213
K134EP	219
K134EP	259
K411	141
K412	141
K420	141
K435	141
K435-PREM	141
K436	141
K1077_-SWEP	212
K4133	141
K4301	141
K_FM	75
LBP75A	221
LH100	220
LP200A	220
MAG349	182
N85518	272
NL1678	185
NL1734CPXE	185
NL13516	185
OS95518	271
OS_FM	72
OS_HS	72
P50	182
P51B17	185
P51B17	279
P240	278
P241	278
P241-30	278
P242	278
P243	278
P244	278
P260	278
P261	278
P262	278
P263	278
P265	278
P266	278
P364R16	279
P365V16	279
P380	279
P381	279
P382	279
P384	279
P385	278
P386	278
P387	279
P388	279
P390	278
P391	278
P392	278
P393	278
P396	278
P397	278
P480	279
P484	279
P490	278
P491	278
P493	278
P497	278
PDLAA	192
PDLBRKT	192
PDL-D1	192
PDL-D2	192
PemGuard	160
PEMKOSFSET	186
PEMKOSTCSET	206
PemPass™	257
PemXGSeal	17
PF2x6KIT	235
PF28200A	235
PFAS	235
PFAS88	235
PFAS100	235
PFBG-4	235
PFBG-4	259
PFBG-8	235
PFBG-8	259
PFBS	235
PFBS	259
PFCDKIT	235
PFFC-8	235
PFHB-1	235
PFHB-2	235
PFHS	235

Copyright © 2015-2025, ASSA ABLOY Accessories and Door Controls Group, Inc., an ASSA ABLOY Group company. All rights reserved. Reproduction in whole or in part without the express written permission of ASSA ABLOY Accessories and Door Controls Group, Inc. is prohibited.

Product	Index
PFKIT-4	235
PFKIT-8	235
PF-SP6-KIT	235
PIF2/165A	237
PIF4/165A	237
PK33	183
PK33	189
PK52	182
PK55	183
PK55	189
PSLIDE	256
PY900	175
Q102	181
Q103	181
Q106	181
Q107	181
Q108	181
R1.5F	125
R1.5FMR	125
R1.5OS	126
R1.5OSMR	126
R1.5OSS	127
R1.5OSSMR	127
R1.25F	125
R1.25FMR	125
R1.25OS	126
R1.25OSMR	126
R1.25OSS	127
R1.25OSSMR	127
R1.75F	125
R1.75FMR	125
R1.75OS	126
R1.75OSMR	126
R1.75OSS	127
R1.75OSSMR	127
R1F	125
R1FMR	125
R1OS	126
R1OSMR	126
R1OSS	127
R1OSSMR	127
R2.25F	125
R2.25FMR	125
R2F	125
R2FMR	125
R2OS	126
R2OSMR	126
R2OSS	127
R2OSSMR	127
R.5F	125
R.5FMR	125
R.5OS	126
R.5OSMR	126
R.5OSS	127
R.5OSSMR	127
R.75F	125
R.75FMR	125
R.75OS	126
R.75OSMR	126
R.75OSS	127
R.75OSSMR	127
RAMP 1	128
RAMP 2	129
RAMP 3	128
RAMP 4	128
RAMP 5	128
RAMP 6	128
RAMP 7	129
RAMP 8	128
RAMP 8	129
RAMP 9	128
RAMP 10	128
RAMP 11	128
RAMP 12	128
RAMP 13	129
RAMP 14	129
RR1	132
RR1.25FMR	133
RR2	132
RS138	80
RS175	80
RVAR1/A	129
RVAR1/AK	129
RVARIOSS	129
S44	182
S44	188
S44	193
S44	210
S52	181
S77	183
S77	188
S88	182
S88	188
S88	193
S104	181
S105	181
S109	181
S442	183
S442	188
S442	193
S442	210
S771	158
S771	189
S771	193
S771x6	158
S771x6	183
S771x6	189
S771x6	193
S772	158
S772	189
S772	193
S773	182
S773	188
S773	193
S773	210
S776	183
S776	188
S776	193
S1125	160
SA1	140
SA2	140
SA3	140
SA4	140
SBR1F	132
SBR1FMR	132
SBR.5F	132
SBR.5FMR	132
SDL	258
SHS80	200
SHS80	213
SIM100	219
SIM150	253
SIM150-BOLTKIT	253
SIM150-LOCKKIT	253
SIM200A	219
SIRLH /SIRRH	222
SOFT CLOSE	260
SPFM	74
SPFM_SLF	74
SPFM_SLI	74
STC411	137
STC411	194
STC411	209
STC4131	137
STC4131	194
STC4131	209
STOP3	240
STOP3	242
STOP3	247
TBS200A-OH.	225
TBS200A-SW	226
TBS250A-OH.	227
TBS250A-SW	228
W60	198
W60 to W100	240
WING 10_H	130
WING 16_H	130
WING EXT_H	130
WT_FM	77
WT_HS	77
X25M	71
XG90KIT	18
XG90KIT	184
XG90SSME-KIT	18
XG90SSME-KIT	157
XG900	18
XG900	184
XG2212	18
XG2212	142
XGSHIM	17
XGSHIM	184

Copyright © 2015-2025, ASSA ABLOY Accessories and Door Controls Group, Inc., an ASSA ABLOY Group company. All rights reserved.
Reproduction in whole or in part without the express written permission of ASSA ABLOY Accessories and Door Controls Group, Inc. is prohibited.

PEMKO
ASSA ABLOY
Experience a safer and more open world

ABOUT THE PEMKO PRODUCT LINE

Since 1952, the Pemko name has been known as a key manufacturer in weatherstripping products. Over the years, as an ASSA ABLOY Group brand, we have expanded our product line into a full line of architectural door trim products to include thresholds, fire/smoke gaskets, door bottoms, perimeter gasketing, brush seals, astragals, continuous geared and stainless steel hinges, fire and life-safety products, lites and louvers, and sliding door hardware.

The Pemko product line offers sound-tested, smoke-labeled, fire-labeled, skid resistant, and ADA-compliant products, and aggressively pursues new product development to create solutions for new applications and requirements.

Applications

- Energy Efficiency: These products make a complete energy efficient door solution – door bottoms, astragals, meeting stiles, brush gasketing, perimeter gasketing, and thermal barrier thresholds.
- Smoke and Fire Gasketing: Hot Smoke Seal™ is an intumescent fire life-safety product that meets UBC7-2 (proposed UL10C) positive pressure testing. Pemko S88 and S773 silicone seals are also smoke and fire rated gaskets that meet UBC7-2 positive pressure testing and are Category G gaskets for edge sealing systems for use with Category B doors.
- Pemko Acoustic Solutions: As a result of extensive acoustic testing, our gasketing systems are used on openings with STC Ratings from the low-30's and into the mid-50's. Acoustic seal sets have been assembled to better assist with determining an operable rating when a door's sealed-in-place rating is known. See pages 222 to 224 for more info.
- Electrically Modified Pemko Hinges: Continuous geared hinges are designed for commercial doors of all traffic levels and offer many benefits for your opening. All of our commercial-grade continuous geared hinges have the added option for electrical modification. Some of these options allow for electrical modifications to be made without removing the door from the opening.
- ADA-compliant aluminum and rubber ramps provide wheelchair access in public access doorways.
- Sustainability: Products are certified to GREENGUARD GOLD standards for low chemical emissions into indoor air during product usage.

All products in the Pemko line undergo rigorous testing to ensure that they meet or exceed the industry standards.
Look for the logos next to the product drawings and see pages 12-13 for more information.

LEED Certification Contribution

ASSA ABLOY can help to achieve prerequisites and accumulate points in several categories and credit areas for LEED. For further information, please call 1-800-824-3018 or refer to our website to view our prepared LEED statement.

U.S. Green Building Council logo is a trademark owned by the U.S. Green Building Council and is used with permission.

ASSA ABLOY is a member of the USGBC and CaGBC

Sales & Support

Customer Service Representatives are available from 7am to 7pm Central time at 1-800-824-3018 or visit the website for the current catalogs, sell sheets, and the most up-to-date templates.

There are many items on the Pemko Quick Ship Program that ship within 48 hours. For the most up-to-date information, visit the Accessories WebShop at https://accessories.assaabloy.com/en/accessories. Customers with established Pemko accounts may request an account in WebShop through Pemko's Customer Service Representatives.

Need a Sales Rep?

Pemko is represented by the ASSA ABLOY Door Security Solutions team
Contact your local ASSA ABLOY Door Security Solution Representative via e-mail by going to **www.assaabloydss.com** and clicking on "Sales Support" or call 1-800-DSS-EZ4U (800-377-3948).

Website: **www.assaaabloydooraccessories.us**
Facebook: **www.facebook.com/ASSAABLOYARCHIT/**
Twitter/X: @ASSAABLOYARCHIT

ASSA ABLOY has manufacturing and warehouse locations for the Pemko line in Memphis TN and Ventura CA. Each location offers a Will Call order pickup option for local customers. In Canada, we have a warehouse location in Toronto ON.

Copyright © 2015-2025, ASSA ABLOY Accessories and Door Controls Group, Inc., an ASSA ABLOY Group company. All rights reserved. Reproduction in whole or in part without the express written permission of ASSA ABLOY Accessories and Door Controls Group, Inc. is prohibited.

THE WEST COAST STOCKING PROGRAM

In an effort to better serve our customers in the western regions, we have expanded our collection of Pemko products available through our Ventura, California warehouse. Our West Coast Stocking Program includes a wide range of door accessories including thresholds, fire/smoke gaskets, door bottoms, perimeter gasketing, brush seals, astragals, continuous geared hinges, sliding door hardware, and more. All of the items in this catalog as well as their finishes are available in California.

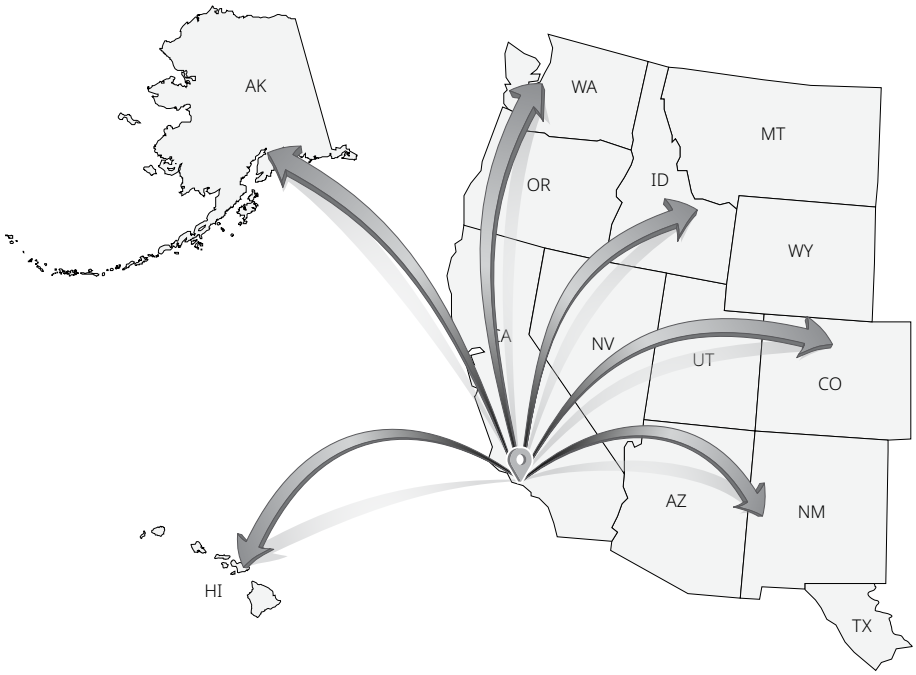

Copyright © 2015-2025, ASSA ABLOY Accessories and Door Controls Group, Inc., an ASSA ABLOY Group company. All rights reserved.
Reproduction in whole or in part without the express written permission of ASSA ABLOY Accessories and Door Controls Group, Inc. is prohibited.

PEMKO
ASSA ABLOY
Experience a safer and more open world

GENERAL INFORMATION AND TERMS

Terms:
All prices are F.O.B. factory. To customers with satisfactory and / or prior approved credit and account status, terms of 1% 15 days, NET 30 days will be allowed. To open a new Pemko account, please contact your local Door Security Solutions Sales agency. Acceptance of orders and deliveries are subject to our approval.

Credit Card Capabilities:
Visa, Mastercard, Discover, and American Express are accepted (only for established open accounts). Payment terms are NET.

Freight Terms:
For freight policy terms & conditions please click **here** or see brand price book.

Oversized/Special Packaging:
$100.00 NET. This will be added to any order not meeting prepaid freight where the product is a) over 10 feet in length, b) a welded threshold assembly, or c) as deemed appropriate to ensure product safety while in transit.

Minimum Order Level:
A surcharge of $15.00 all will be added to NET orders less than $100.00 NET.

Returns And Allowances:
No merchandise will be accepted for return or credit unless prior written approval is obtained. Returned merchandise must be of recent sale (6 months), in restockable / resalable quality, size, and condition. A minimum 25% charge plus freight charges will be made for returns. Material that is not in standard stock sizes, is made to special order, has a custom finish, or has been sold at special consideration or closeout is subject to additional charges. Foam tape is not returnable. Adhesive gasket may only be returned within six (6) months from the ship date.

Contact Customer Service for rules and Return Goods Authorization paperwork.

Cancellation Charges:
Cancellation of special order material, non-stock sizes, or special sizes are subject to cancellation charges, based on factory expense and material used.

Guarantee:
Pemko products are guaranteed for five (5) years against defects in material or workmanship, except: 1) PemKote abrasive surface for thresholds is guaranteed for ten (10) years. 2) Polyurethane foam tapes are guaranteed for 90 days. 3) Grade 1 PemkoHinges are guaranteed for the life of the opening against defects in material or workmanship. All other grades of PemkoHinge carry a ten (10) year warranty. 4) Electrical modification performance is guaranteed for one (1) year on Standard Duty, Heavy Duty Grade 3 (HD3), Heavy Duty Grade 1 (HDI), and 1100 Series hinges. 5) PC Henderson products are guaranteed for two (2) years against defects in material workmanship. 6) Powder Coated finishes are warranted for two (2) years; normal wear is not included in coverage.

Markar Continuous Hinges and Pivots are guaranteed to be free from defects in materials and workmanship for a period of 10 years. Hinges with medical bearings are guaranteed for twenty-five (25) years. Markar Edge Guards and Astragals are guaranteed to be free from defects in materials and workmanship for a period of (1) year. Markar electrical modification performance is guaranteed for five (5) years.

Pemko Manufacturing Co. will not be liable for defects or damages arising from improper installation, product modification, incorrect application or storage of product. Written notice of damages must occur within the warranty period. Liability shall be limited to the replacement of product or component determined to be defective and shall not include costs arising from removal or reinstallation of product. Cost of replacement shall not exceed original purchase price. No other claims will be allowed. In no event shall liability be extended to include punitive, incidental or consequential damages arising from use of Pemko products. This is the sole warranty given by Pemko Manufacturing Co.. No other warranty implied or expressed shall be allowed.

Claims For Shortage Or Damage In Transit:
All claims must be made within ten (10) days of receipt of goods. Purchaser assumes the risk of loss or damage in transit.

Mill Lengths:
Most extrusions are available in mill lengths. Cut lengths over 12 feet are charged as mill lengths.

Copyright © 2015-2025, ASSA ABLOY Accessories and Door Controls Group, Inc., an ASSA ABLOY Group company. All rights reserved. Reproduction in whole or in part without the express written permission of ASSA ABLOY Accessories and Door Controls Group, Inc. is prohibited.

GENERAL INFORMATION AND TERMS

Ordering Information:
Please order material by product number, specifying length required per piece and the number of pieces. Most weatherstrips are offered in standard sizes. If it is not practical to furnish the size ordered, the next larger size will be furnished and charged. Thresholds are maintained in standard sizes with $^1/_2$" extra length on thresholds thru 47" and 1" extra length for thresholds 48" and longer to allow for fitting and field trim, unless exact net cut size is specified. Cut lengths under 24" will be charged as 24".

Thresholds, perimeter gaskets, astragals, and door bottoms are punched or drilled as standard, unless otherwise specified in this catalog. Material can generally be supplied without holes by stating "No Holes" on the applicable purchase order line.

Thresholds are punched with 12" centers. Thresholds over 8" in width will be punched with a double row. Thesholds are generally supplied with #10 flat head screws. Other fasteners are available on request.

Metal retainers for perimeter gaskets, door bottoms, and astragals are punched with 6" centers.

Non-Stock Finish Information:
Some items shown in this catalog are not stocked in certain finishes (i.e. BDG, G, PW, and SN). 'Batch charges' may be required on non-stock finishes to achieve our normally fast lead times. Contact Customer Service for a quotation and lead time.

Option Tables:
The option tables are provided for selection of other than standard or normal finishes, components, fabrication, or fasteners. Since these are other than standard or normal, please allow for extra lead time for option(s) selected.

Cutting Tolerances:
Elastometric: -0 + 2" (50.8mm)
Thresholds (up to 48"): + $^1/_2$" (12.7mm)
Thresholds (48" and up): +1" (25.4mm)
Net Cut: +/- 0.060, $^1/_{16}$" (1.5mm)
Hinges: +/- 0.062, $^1/_{16}$" (1.57mm)
Automatic Door Bottoms: +/- 0.060, $^1/_{16}$" (1.5mm)

Orders are subject to acceptance by Pemko Manufacturing Co. All prices and terms are subject to change without notice.

How to Order (Product Number Designations):
When placing your order, please specify the product profile number, finish, insert and size/length. Also make sure to clearly state any special fabrication needs, optional fasteners or custom finishes/sizes required.

Throughout the catalog, products are listed with an underscore (_) where variable finishes are available. More in-depth ordering information for specific lines is available in the individual product sections of the catalog.

Standard Products:
Example: 2005 A T 36 (Shown as 2005_T in catalog)

Profile#:	Finish:	Insert:	Size/Length:
2005	A	T = ThermoSeal	36 = 36"
216	SN	PK = PemkoPrene®	48 = 48"
297	BDG	V = Eco-V™	3684 = 1 piece @ 36" + 2 pieces @ 84"
303	A	S=Silicone	84/2 = 2 pieces @ 84"

Adhesive Gasketing Products:
Example: S773 BL 21 (Shown as S773_ in catalog)

Profile#:	Finish:	Size/Length:
S773	BL	21 = 21' coil
PK55	BL	510 = 510' (bulk packaging)
S88	W	17 = 17' coil

For **PemkoHinge®** and **Modular Ramps**, see detailed ordering information in their individual catalog sections.

Copyright © 2015-2025, ASSA ABLOY Accessories and Door Controls Group, Inc., an ASSA ABLOY Group company. All rights reserved.
Reproduction in whole or in part without the express written permission of ASSA ABLOY Accessories and Door Controls Group, Inc. is prohibited.

PEMKO
ASSA ABLOY
Experience a safer and more open world

MATERIALS AND FINISHES INFORMATION

Metals:
Extruded metal products are made from 6063 aluminum alloy or CDA alloy C38500 architectural bronze (brass). Roll-formed metal products are made from steel, 70-30 yellow brass, or 85-15 red brass. Roll-formed aluminum weatherstripping is produced from various alloys selected for the particular properties required. See finishes information below for all finish designations. If you do not see the option you require, please inquire with our Customer Service Department about the feasibility of a custom finish.

Finish Designations:

4E - Translucent Brass Powder Coat
10BE - Satin Bronze Powder Coat
A - Mill Finish Aluminum
AK - Mill Finish Aluminum w/PemKote®
B - Mill Finish Extruded Bronze (Brass)
BK - Mill Finish Extruded Bronze (Brass) with PemKote®
BSP - Black Suede Powder Coat
C - Clear Anodized Aluminum
D - Dark Bronze Anodized Aluminum
G - Gold Powder Coated Aluminum (Anodized available with Batch Charge)
S - Cladded Stainless Steel
SN - Satin Nickel Powder Coated Aluminum (Anodized available with Batch Charge)
SP - Galvannealed Steel
SS - Stainless Steel (see individual part for finish)
WSP - White Suede Powder Coat
Z - Steel Metal

Special Order Finishes:
Painted Aluminum (any color)
Polished Aluminum, Uncoated
Polished Bronze, Uncoated
Powder Coating, Custom - Provide RAL#
Satin Brushed Aluminum, Uncoated
Satin Brushed Bronze, Uncoated
Oxidized and Oil Rubbed Bronze

Finish Options:
PemKote®
Anodized *(clear, dark bronze, black)*
Polish/Buff Brass
Polish/Buff Aluminum
Satin Buff Brushed Brass
Oxidized & Oil Rubbed L-metal (ANSI/BHMA 722)
Oxidized & Oil Rubbed L-metal (custom finish, 609, 613)
Oxidized & Oil Rubbed Thresholds (ANSI/BHMA 722)
Oxidized & Oil Rubbed Thresholds (custom finish, 609, 613)
Oxidized & Oil Rubbed Weatherstrip (ANSI/BHMA 722)
Oxidized & Oil Rubbed Weatherstrip (custom finish, 609, 613)

Adhesive Gasketing And Replacement Eco-V™ Finishes:
BL - Black
C - Clear
D - Dark Brown
GR - Light Gray
TAN - Tan
W - White

Inserts:
Pemko Manufacturing Co. manufactures many products with gasket inserts (seals). See insert information below for all insert (seal) designations. Also, the available inserts (seals) for each individual product are shown adjacent to each individual product.

E - EPDM, Solid
M - Magnetic
N - Neoprene or EPDM
NB - Nylon Brush
P - Pile
PK - PemkoPrene®*
Q - Kerf-in Foam
R - Sponge Neoprene or EPDM
S - SiliconSeal or Sponge Silicone (see individual part)
SB - Soft Brush
T - ThermoSeal
TF - Triple Foam
V - Eco-V®

*PK: In order to best control our customers' costs some PK (Santoprene™) products may be a silicon based elastomeric material with comparable performance.

Copyright © 2015-2025, ASSA ABLOY Accessories and Door Controls Group, Inc., an ASSA ABLOY Group company. All rights reserved. Reproduction in whole or in part without the express written permission of ASSA ABLOY Accessories and Door Controls Group, Inc. is prohibited.

Fabrication Options:
Pemko Manufacturing Co. offers many fabrication options for our products to fit specific job requirements. Please consult our Customer Service Department for details. Custom fabrications are subject to engineering design costs and are quoted on a time and material basis.

Bevel	One Edge
Cut	Thresho-Sill Nosing Flush
Leadline	Leadline of Astragals, Door Bottoms
Rip	Width
Tack Weld	One Line
Tab	Welded Tab & Screw
Support Leg	For Elevated Plates 3" Center to Center
L-Notch	Both Ends of Threshold
U-Notch	Both Ends of Threshold
Drill	Thresho-Sill *(Add "H" to Prod. #)*
Mill & Drill	Thresho-Sill *(Add "M" to Prod. #)*
Miter1-1	Single, One End of Threshold
Miter1-2	Single, Both Ends of Threshold
Miter2-1	Double, One End of Threshold
Miter2-2	Double, Both Ends of Threshold
Half Notch	1/2", Door Shoe, Both Ends, Drip Only
Half Notch	3/4", Door Shoe, Drip Only, Both Ends
Half Notch	5/8", Door Shoe, Drip Only, Both Ends
Half Notch	9/16", Door Shoe, Drip Only, Both Ends
Full Notch	1/2", Door Shoe, Both Ends
Weep Holes	All Door Shoes
Custom Holes	Custom Hole Pattern

Fabrication Options Important Note: Complicated fabrications are quoted based on time and materials.

Drawings:
Product drawings throughout the catalog may be a reduced representation/not drawn to scale. They are representations of the product size, dimensions, shape, etc. For scale drawings in PDF or AutoCAD (DWG or DXF) format, please visit our website: **www.pemko.com**

PRODUCT TESTING/CLASSIFICATION SYMBOLS

These symbols are shown adjacent to products throughout the catalog so that one can readily identify and select products which meet specification and/or code requirements.

GREENGUARD GOLD Certification:
Tested To: UL2818
GREENGUARD GOLD Certified products are certified to GREENGUARD GOLD standards for low chemical emissions into indoor air during product usage. For more information, visit **ul.com/gg** or **spot.ul.com** for Pemko's GreenGuard listing.

Air Infiltration Tested
Tested To: ASTM E-283-04 (2012)
Products indicated by this symbol have been air infiltration tested in accordance with the requirements of ASTM E-283 Rate of Air Leakage Through Exterior Windows, Curtain Walls, and Doors.

Sound Tested
Tested To: ASTM E 90-2009
Products indicated by this symbol have been acoustically tested in accordance with ASTM E 90-2009. Method for Laboratory Measurement of Airborne Sound Transmission Loss of Building Partitions Tests were conducted by accredited laboratories for acoustic testing. Contact your Door Security Solutions Sales rep or Pemko Customer Service for recommended PEMKOSTCSET kits.

Barrier-Free
Meets Requirements of: ADAAG-2010 (Amended) and ICC / ANSI A117.1-2017
Products indicated by this symbol are access compliant by having installed height differences not over 1/2" with allowable edge and slope conditions. All ramp products (found in the Modular Ramp section) have ADA compliant 1:12 slopes: Pemko Modular Ramp Thresholds, Rubber Ramp Thresholds and Recycled Rubber Ramps. Contact Pemko Manufacturing or refer to page 14 for recommended Barrier-Free Systems.

Copyright © 2015-2025, ASSA ABLOY Accessories and Door Controls Group, Inc., an ASSA ABLOY Group company. All rights reserved.
Reproduction in whole or in part without the express written permission of ASSA ABLOY Accessories and Door Controls Group, Inc. is prohibited.

PEMKO
ASSA ABLOY
Experience a safer and more open world

Non-Skid/PemKote™

Meets Requirements of: ASTM D 2047, UL 410 & Federal Specifications P-F-430C

PemKote™ is a rugged abrasive finish of nickel-aluminum composite which is fused to the metal surface by an exothermic reaction. This process produces an aesthetically pleasing skid resistant coating with extremely high bond strength and excellent resistance to oxidation. PemKote™ carries a TEN (10) YEAR GUARANTEE, and is available on all Pemko line metal thresholds and metal modular ramps. ASSA ABLOY highly recommends the use of PemKote™ for all Barrier-Free Modular Ramps and as a durable, economical alternative for cast abrasive products.

Smoke Tested

Tested To: UL 1784

Meets Requirements of: NFPA 105-2013

Products indicated by this symbol are Listed by WYLE Laboratories as having been tested in accordance with Underwriters Laboratories Inc.®, Standard UL 1784 Air Leakage Tests of Door Assemblies, and meet the performance criteria for allowable air leakage as specified in NFPA 105-2013 Installation of Smoke Control Door Assemblies.

Fire Rated

Products indicated by this symbol are fire rated, classified and listed (U.S.A. and Canada) to meet the requirements/ standards of UL10B, UL10C, and UL10C (Edge Sealing). For a complete listing of fire rated and UL listed products, please refer to the UL Product Directory website, https://iq2.ulprospector.com.

PemkoHinge® Rating:

All hinge models designated with these symbols are tested by Underwriters Laboratories Inc.® (U.S.A. and Canada) to standards UL10B and UL10C for up to a 3-Hour Fire Listing for all 4'-0" x 10'-0" and 8'-0" x 10'-0" door and frame assemblies. Fire listing certifications apply to all approved hollow metal and wood door assemblies in drywall or masonry wall construction. Check UL File #R14745 on the UL website for a complete and current listing of applicable PemkoHinge® products.

Builders Hardware Manufacturers Association:

Products indicated by this symbol have been voluntarily submitted to rigid third party testing and follow-up audits to confirm that they fully and continuously meet or exceed the requirements of their underlying ANSI / BHMA Standards. These products are listed in the BHMA Certified Products Directory. They are also posted and frequently updated on the BHMA website at www.buildershardware.com. Pemko products are covered by the following: ANSI / BHMA A156.21 Standard for Thresholds, ANSI / BHMA A156.22 Standard for Door Gasketing Systems, and ANSI / BHMA A156.26 Standard for Continuous Hinges.

UL1S47 - Check UL File #R18375 on the UL website for a complete and current listing of applicable Pemko edge sealing and fire glazing products (not specifically listed by item in this product catalog).

UL4L10 - Check UL File #R14369 on the UL website for a complete and current listing of applicable Pemko line products (not specifically listed by item in this product catalog).

Check Pemko's Category G, Category H and Category J listings on ITS website www.intertek.com for a complete and current listing of applicable Pemko edge sealing, perimeter gasketing and fire glazing products.

Copyright © 2015-2025, ASSA ABLOY Accessories and Door Controls Group, Inc., an ASSA ABLOY Group company. All rights reserved. Reproduction in whole or in part without the express written permission of ASSA ABLOY Accessories and Door Controls Group, Inc. is prohibited.

BARRIER-FREE SYSTEMS

Pemko product lines include many products such as modular ramps, thresholds and floor treads, that help you meet the requirements of the Americans with Disabilities Act (ADA) as outlined in the Americans with Disabilities Act Accessibility Guidelines (ADAAG-2010 amended); ICC /ANSI A117.1 Standard Accessible and Usable Buildings and Facilities; any of the various Uniform Building Codes; or state access codes (e.g. California Building Code, Title 24).

The following table shows which products comply with the ADAAG and ICC /ANSI standard and also notes their respective sections.

ICC / ANSI A117.1 (ADAAG)	Pemko Recommendation
302 (4.5) Floor or Ground Surfaces. 302.1 (4.5.1) General. "shall be slip resistant"  *Skid resistant.*	"Slip resistant" PemKote™, non-skid surface • PemKote™ (finish code: "K") is a rugged abrasive finish of nickel-aluminum composite • PemKote™ provides safety in environments used by youths and people with disabilities • For more information, see the Modular Ramps section 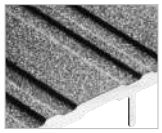 *PemKote™: skid resistant surface.*
302.2 (4.5.3) Carpet. "Exposed edges of carpet....shall have trim along the entire length of the exposed edge. Trim shall comply with Section 303"	 Note: See Commercial Thresholds section (page 136) for more options.
303 (4.5) Changes in Level 303.2 (4.5.2) Vertical. "Changes in level of 1/4" (6mm) high maximum shall permitted to be vertical"	 Note: See Commercial Thresholds section (pages 134-135) for more options.
303.3 (4.5.2) Beveled. Changes in level greater than 1/4 inch (6.4 mm) in height and not more than 1/2 inch (13 mm) maximum in height shall be beveled with a slope not steeper than 1:2."	 Note: See Commercial Thresholds section (pages 106-129) for more options.
303.4 (4.5.2) Ramped. "Changes in level greater than 1/2" (13mm) shall be by a ramp complying with Section 405 (4.8)"	• Assemblies accommodate 1/2" to 2 1/4" floor offsets in meeting the 1:12 slope requirements of the "Americans with Disabilities Act" • Rubber ramp component assemblies meet the same requirements. • Answer the needs of architects, specifiers, building owners, installers, and physically challenged people • For use in schools, hospitals, stadiums, offices, restaurants, hotels, airports, and more • For complete information, see the Modular Ramps section
404 (4.13) Doors, Doorways and Gates. 404.2.4 (4.13.8) Thresholds. "...shall be 1/2" high maximum...shall comply with Sections 302 and 303"	 Note: See Commercial Thresholds section (pages 106-129) for more options.
404.2.8 Door and Gate Opening Force - 5 lbs. maximum	
405 (4.8) Ramps 405.2 (4.8.2) Slope. "Ramp runs shall have a running slope... not steeper than 1:12" *(Note: Some exceptions apply to this with respect to existing buildings having space limitations. Consult Pemko for specific applications.)*	 Note: See Modular Ramp section (pages 142-146) for more options.
504 (4.9) Stairways 504.4 Tread Surface 504.5 (4.9.3) Nosings	  Note: See Floor Treads section (pages 132-133) and Floor Molding, Trim section (page 284) for more options.

Copyright © 2015-2025, ASSA ABLOY Accessories and Door Controls Group, Inc., an ASSA ABLOY Group company. All rights reserved.
Reproduction in whole or in part without the express written permission of ASSA ABLOY Accessories and Door Controls Group, Inc. is prohibited.

PEMKO
ASSA ABLOY
Experience a safer and more open world

ANSI/BHMA BHMA CERTIFIED

The following interprets ANSI/BHMA numbers which identify material and type of products. For products that meet ANSI/BHMA Standards, look for the BHMA certified logo next to the product in our catalog. For a complete listing refer to the BHMA Certified Products Directory on line at **www.buildershardware.com**.

American National Standard for Thresholds ANSI/BHMA A156.21 (2019)

1 Product Section "J" Designates Architectural Door Trim, Thresholds

2 Material	3 Configuration	4 Surface	5 Description	6 Description
1. Architectural Extruded Brass or Bronze 3. Aluminum 5. Stainless Steel 7. Rubber & similar nonmetallic 0. Other (ie: cast iron, safety abrasive, etc.)	1. Compressing top 2. Flat Saddle 3. Half Saddle 4. Interlocking 5. Rabbeted, Latching/Panic with Gasket 7. Plate 8. Ramped 9. Saddle for Floor Closer 0. None designated	1. Fluted 2. Fluted with abrasive 3. Smooth 4. Smooth with abrasive	1. Applied Stop 2. Applied Stop with gasket 3. Barrier Free 4. Carpet Separator 5. Ends Mitered 6. Expansion Assembly 7. Hook Strip Applied to door 8. Offset 9. Thermal Break 0. None Designated	1. Applied Stop 2 .Applied Stop with gasket 3. Carpet Separator 5. Ends Mitered 6. Expansion Assembly 7. Hook Strip applied to door 8. Offset 9. Thermal Break 0. None Designated

Suffix "-HD" designates thresholds meeting Heavy Duty requirements

American National Standard for Door Gasketing and Edge Seal Systems ANSI/BHMA A156.22 (2021)

1 Product Section "R" Designated Gasketing

2 Product Material	3 Gasketing Material		4 Product Type	5 Material Application	6 Gasketing Rating
1. Brass or Bronze 3. Aluminum 5. Stainless Steel 0. Optional material or none used	A. Brush B. Neoprene, solid C. Neoprene, closed cell D. Vinyl/Eco-V™ E. Silicone Rubber F. Pile G. Thermoplastic Elastomer (TPE) H. Thermoplastic Urethane (TPU) J. Thermoplastic Rubber K. Spring Metal L. Magnetic M. Felt N. Rubber Fabric P. Intumescent Q. Intumescent/Brush	R. Intumescent/ Neoprene, Solid S. Intumescent/ Neoprene Closed Cell T. Intumescent/Vinyl U. Intumescent/ Silicone Rubber V. Intumescent/Pile W. Intumescent/ Thermoplastic (TPE) X. Intumescent/ Thermoplastic Urethane (TPU) Y. Optional material or none used Z. Intumescent/ Thermoplastic Rubber	1. Head and Jamb 2. Head and Jamb, Adjustable 3. Automatic Door Bottom 4. Door Sweep or Shoe 5. Door Sweep or Shoe with Drip Cap 6. Astragal Overlapping 7. Astragal Split or Compensating 8. Astragal Adjustable 9. Rain Drip without gasket 0. Other	1. Door Edge 2. Door Edge, Mortise 3. Door Face 4. Door Face, Semi-Mortise 5. Frame Rabbet (surface or mortise) 6. Frame Soffit (H.M.) Frame Stop (W.D.) 7. Frame Face 8. Kerf 9. Stop (H.M.), Stop Face (W.D.) 0. Other	0. Smoke/Energy Performance/ Acoustic Rated 1. Smoke/Energy Performance Rated 2. Smoke/Acoustic Rated 3. Energy Performance/ acoustic Rated 4. Smoke Rated 5. Energy Performance Rated 6. Items not Rated 7. Acoustic Rated

American National Standard for Continuous Hinges ANSI/BHMA A156.26 (2021)

First letter denotes BHMA Product Section (A)

First Numeral- Product Material	Second Numeral- Type of Product	Third Numeral- Electrical Modifications	Fourth Numeral- Door Weight (lbs)	Fifth Numeral- Grade Classification	Second Letter- Hinge Type
1. Brass, Bronze 3. Aluminum 5. Stainless Steel 8. Steel	1. Edge Mounted Hinges 2. Half Edge Mounted Hinges 3. Full Surface Hinges 4. Half Surface Hinges 5. Swing Clear 6. Raised Barrel 7. Wide Throw 0. Other	0. None 1. Concealed Wire Transfer 2. Monitor 3. Power Transfer 4. Other	1. 150 2. 300 3. 600 4. 1200	1. Grade 1 2. Grade 2 3. Grade 3	B. Barrel G. Geared

Copyright © 2015-2025, ASSA ABLOY Accessories and Door Controls Group, Inc., an ASSA ABLOY Group company. All rights reserved. Reproduction in whole or in part without the express written permission of ASSA ABLOY Accessories and Door Controls Group, Inc. is prohibited.

EXCESSIVE GAP PRODUCTS

Excessive gaps are open spaces around doors that allow air, fire, and smoke to pass through. By filling these gaps with our innovative Excessive Gap products, you enhance the safety and security of your building.

Excessive Gap Products

Product	Location	Fire Rated				Door Width					Single Doors		Double Doors	
		20 min.	45 min.	60 min.	90 min.	1/4"	5/16"	3/8"	1/2"	1-1/2"	Wood	Hollow Metal	Wood	Hollow Metal
XG10	Perimeter Seal	✓	✓	✓	*	✓					✓	✓	✓	✓
XG10-HM	Perimeter Seal	✓	✓	✓	✓	✓	✓					✓		✓
HSS20XGxS773	Perimeter Seal	✓	✓	✓		✓	✓				✓	✓		
XG90 KIT	Perimeter Seal	✓	✓	✓	✓	✓	✓	✓			✓	✓		
EGA305XGSS	Top of Door	✓	✓	✓	✓	✓	✓	✓	✓		✓	✓	✓	✓
XG2212_PK773	Door Bottom	✓	✓	✓	✓					✓	✓	✓	✓	✓
325XGSSN	Door Bottom	✓	✓	✓	✓					✓	✓	✓	✓	✓
XG90SSME-KIT	Meeting Edge	✓	✓	✓	✓	✓	✓	✓	✓				✓	✓
XGSHIM	Latch Shim	✓	✓	✓	✓	✓					✓	✓	✓	✓

* XG10 is only approved for 90 minutes for hollow metal, and up to 60 minutes for wood.

325XGSSN Door Bottom Solution

AVAILABLE FINISHES:
SS, SSBSP, SSWSP, SS10BE
REPLACEMENT INSERT: **N25 (BL)**

- Stainless steel door sweep paired with stainless steel angle
- #4 brushed stainless steel
- Supplied with K450XG end plate kit

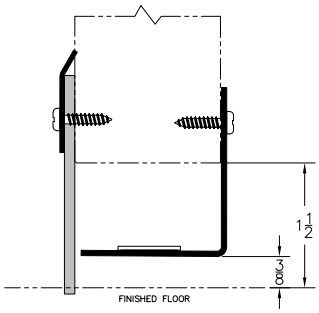

EGA305XG_ Door Top Solution

AVAILABLE FINISHES:
SS, SSBSP, SSWSP, SS10BE

- Stainless steel construction, #4 brushed
- Supplied with HSS2000 intumescent
- Supplied with K450XG end plate kit

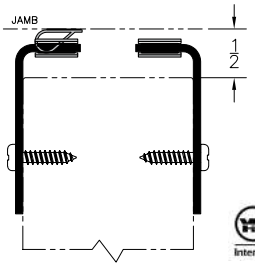

XGSHIM Latch Shim Perimeter Solution

- Meets UL10C standards for 90-minute wood and metal doors
- For use on excessive gaps on the frame behind the strike plate
- Certified in USA & Canada
- Two product numbers, XGSHIM234 and XGSHIM478

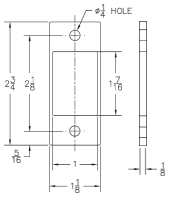

XGSHIM234

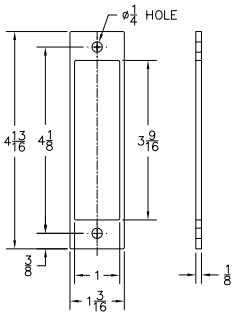

XGSHIM478

EZgap™ XG10 SERIES Adhesive Gasketing

AVAILABLE FINISH: **BL (Black), BR (Brown), GR (Grey), W (White)**
AVAILABLE LENGTHS: **18 ft, 50 ft Rolls**

- Flexible, adhesive-applied solution for excessive gaps up to 5/16"
- Can be used as a full perimeter system or used independently on Latch Edge, Hinge Edge, or Header
- Meets UL10C requirements for singles or pairs of doors with excessive gaps:
  - XG10:
    - Gaps up to 1/4". 60 minutes for wood doors, 90 minutes for hollow metal doors
  - XG10-HM:
    - Gaps up to 5/16". 90 minutes for hollow metal doors
    - Kitted with the HSS90150XG rigid intumescent strip for top door channel

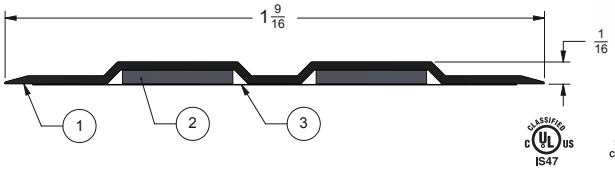

COMING SOON!

PemXGSeal Intumescent Caulk



- UL10C 90-minute fire rating
- Maintains integrity and expands with heat during a fire
- Non-shrinking, low-odor polymer formula provides a non-stick seal and fills door holes up to 1/2"
- 10.4 oz with an 18-month shelf life

800-824-3018 | www.pemko.com
Check the web site for the up-to-date catalog

Copyright © 2015-2025, ASSA ABLOY Accessories and Door Controls Group, Inc., an ASSA ABLOY Group company. All rights reserved.
Reproduction in whole or in part without the express written permission of ASSA ABLOY Accessories and Door Controls Group, Inc. is prohibited.

PEMKO
ASSA ABLOY
Experience a safer and more open world

EXCESSIVE GAP PRODUCTS

XG2212_PK773
Door Bottom Solution

AVAILABLE FINISHES: **A, BSP, WSP, 10BE**
REPLACEMENT INSERT: **PK773 (BL)**

- Aluminum construction
- Easily field modifiable with standard equipment
- Supplied with K450XG end plate kit
- Patent Pending

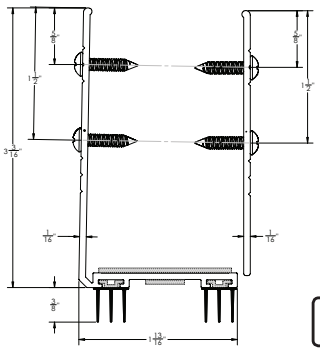

XG90SSME-KIT
Meeting Edge

AVAILABLE FINISHES: **SS, 10BE, BSP, WSP**

- Certified for paired doors on both Hollow Metal and Wood Fire-Rated Doors, up to 90 minutes
- Meets UL10C requirements for excessive gaps up to 1/2"
- Furnished with metal edge guard and high performance intumescent: HSS2000BL, HSS90BL

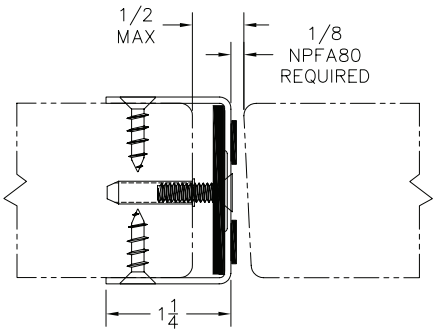

XG90KIT
Perimeter Solution

- Brings fire-rated doors with excessive vertical and head gaps back into spec - up to 3/8"
- UL Classified for 90-minutes
- Kit includes both products shown below, XG900 and HSS20XGxS773

XG900
Perimeter Solution

AVAILABLE FINISH: **SP**

- 16ga galvannealed steel
- Can be screw applied or welded to metal frame. If welded, specify with "no holes" for clean appearance.
- Can be field painted to match the frame

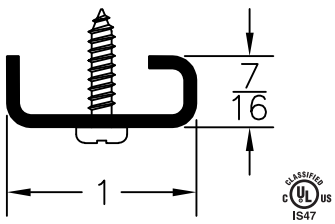

HSS20XGxS773
Perimeter Solution

AVAILABLE FINISH: **BL**

- Pressure sensitive adhesive backing
- Seals a gap at the header or along the jambs up to 5/16" for 60-min openings
- Seals a gap along the latch edge up to 3/8" for 90-min openings when used with the XG900SP in the XG90KIT

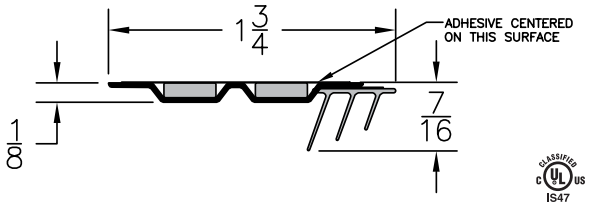

PEMKO
ASSA ABLOY
Experience a safer and more open world

800-824-3018 | www.pemko.com
Check the web site for the up-to-date catalog

Copyright © 2015-2025, ASSA ABLOY Accessories and Door Controls Group, Inc., an ASSA ABLOY Group company. All rights reserved. Reproduction in whole or in part without the express written permission of ASSA ABLOY Accessories and Door Controls Group, Inc. is prohibited.

MARKAR CONTINUOUS PIN AND BARREL HINGES

CONTENTS:

General Information 20
Hinge Finishes 22
Hinge Numbering System and Standard Lengths 23
Continuous Hinge Modifications 24
3500 Series Stainless Steel Pin and Barrel Security Hinges 27
300 Series Stainless Steel Pin and Barrel Hinges 31
300 Series Stainless Steel Edge Guards 47
200 Series Carbon Steel Pin and Barrel Hinges 51
100 Series Aluminum Pin and Barrel Continuous Hinges 53
900 Series Toilet Partition Hinges 55
400 Series Toilet Partition Hinges 57
Pivots 59
Flat Astragals 60
Fasteners and Fastener Packs 61
Tools, Parts, and Accessories 65
Custom Lengths 66

INDEX:

PRODUCT	PAGE
B1923	59
EG308	47
EGC308	48
EGL308	49
EGT308	50
FA68	60
FA70	60
FA80	60
FM100	53
FM200	51
FM300	31
FM300WT	32
FM300WT	33
FM400	57
FM900	55
FM3500	27
FS102	54
FS301	34
FS302	35
FS402	58
FS902	56
FS910	56
FS3501	28
FS3502	29
FS/SC309	40
HG305	38
HG305WT	39
HG310	41
HG311	42
HG315	43
HG323	44
HG326	45
HG329	46
HG3505	30
HM304	37
HS203	52
HS303	36

NOTE: Products shown in this section may not be drawn to scale

Copyright © 2015-2025, ASSA ABLOY Accessories and Door Controls Group, Inc., an ASSA ABLOY Group company. All rights reserved.
Reproduction in whole or in part without the express written permission of ASSA ABLOY Accessories and Door Controls Group, Inc. is prohibited.

PEMKO
ASSA ABLOY
Experience a safer and more open world



MARKAR CONTINUOUS PIN AND BARREL HINGES

Markar has been a leader in innovative products for the hardware industry since 1969. In 1983, Markar was the first manufacturer to produce an architectural grade, adjustable continuous pin and barrel hinge line, and that innovation continues today with quality continuous hinges and edge guards.

Markar leads the industry in development of fire rated continuous hinges with their flagship 300 Series Stainless Steel, 3500 Series institutional grade, and 200 Series cold rolled steel hinges. Building on customer feedback, Markar has developed over 75 standard continuous hinge models providing products for a wide variety of applications and challenges.

Custom Designs

Whether the need is for a custom color to match a specific palette, hospital tips for patient rooms, hardware cutouts, wide throw models, custom hole patterns, security fasteners, current transfers, monitoring switches, or medical bearings, Markar hinge modifications will enhance the fit and function of an opening. Markar hinges are available in a wide range of finishes including powder coat, anodized (for aluminum), and architectural finishes.

Medical Bearings are Standard

Medical Bearings are standard for all Pin and Barrel hinges. You benefit from this standard offering with permanently lubricated hinges with no metal to metal contact, improving the life and overall function of the hinge.

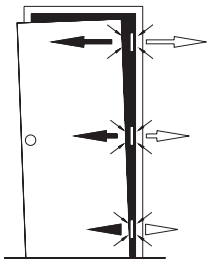

Most door and frame stress is put on the top of conventional hinge systems.

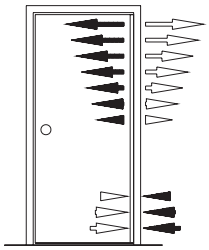

A continuous hinge spreads the stress along the full length of the door and frame.

WHY CONTINUOUS HINGES?

Did you know that on a door with traditional butt hinges, 70% of the door weight is on the top hinge? The top hinge also bears the brunt of abuse when doors are opened beyond the stop device, resulting in kickback shock and eventual failure of the hinge and damage to the frame. This is why continuous hinges are recommended for heavy doors and for situations where doors are exposed to misuse.

Continuous hinges reduce the factors leading to hinge failure by distributing weight evenly so wear and tear to the frame and door is reduced significantly.

In addition, continuous hinges:

- Increase security and reduce vandalism by preventing insertion of devices between the door and frame
- Ease installation by providing simple alignment of electrical transfers and of monitoring switches
- Reduces air infiltration by creating a complete seal from top to bottom of the door at the hinge jamb

Markar manufactures pin and barrel hinges as well as spring loaded toilet partition pin and barrel models. There are over 75 different models to choose from offering a variety of configurations, options, and materials.

800-824-3018 | www.pemko.com
Check the web site for the up-to-date catalog

Copyright © 2015-2025, ASSA ABLOY Accessories and Door Controls Group, Inc., an ASSA ABLOY Group company. All rights reserved. Reproduction in whole or in part without the express written permission of ASSA ABLOY Accessories and Door Controls Group, Inc. is prohibited.

Optional Features

The Unique Adjust-A-Screw™ Fastener

An optional Markar fastener available on Hinge Guard models permits up to 3/8" width adjustment. Full door length adjustment means doors can be squared accurately and easily in new installations and existing frames can be used in retrofits. Maintenance staff can make future adjustments of the door by re-positioning the Adjust-A-Screw™ Fasteners.

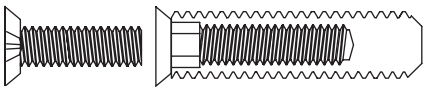

Adjust-A-Screw™ Assembly

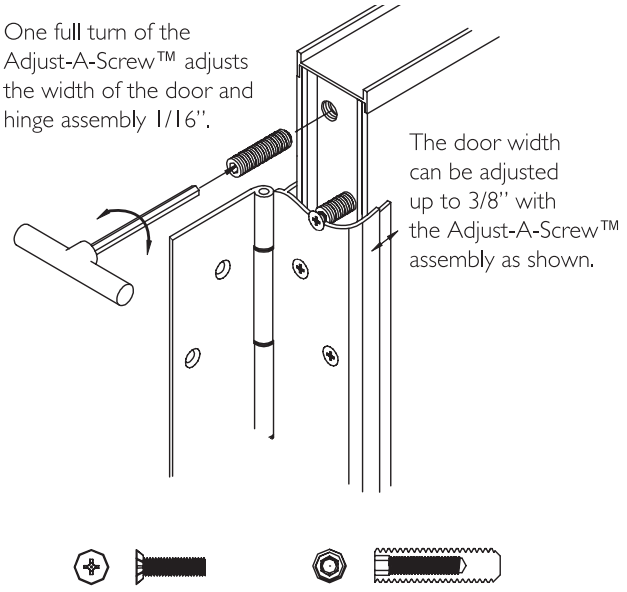

Recommended 14 gauge reinforcements on frame and door. If using an adjustable Hinge Guard with Adjust-A-Screw, use 14 gauge reinforcements on frame and 12 gauge reinforcements on door.

For more information, including technical memos, door clearance guides and templates visit **www.assaabloydooraccessories.us**

Exclusive Fiber-Reinforced Polymer Bearings

- Uniquely designed to provide clean and quiet hinge operation
- Self lubricating with high resistance to wear
- Exceeds ANSI/BHMA Grade 1 requirements
- 25 year warranty

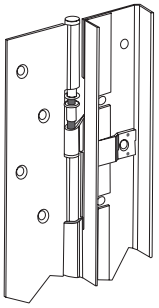

Windstorm Rated Hinges

Windstorm/hurricane testing on Markar continuous hinges was completed with UL and has been reviewed and approved to meet the requirements of the Florida Building Code (FBC). These hinges have passed tests for the following: an Impact Test (TAS 201), Static Load/ Cyclical Test (TAS 202), and a Water and Leakage Test (TAS 203). Markar excelled in all three categories of testing.

Tornado

Hurricane

Based on this performance, the FBC approved most Markar hinges in the following series:

(Up to openings of 4'0 x 8'0 singles and 8'0 x 8'0 pairs)

- 100 – 6063-T6 Aluminum
- 200 – 14 ga. Cold Rolled Carbon Steel
- 300 – 14 ga. 304 Stainless Steel
- 600 – 14 ga. 316 Stainless Steel
- 3500 – 12 ga. 304 Stainless Steel (Security Grade)

Fire Rated Continuous Hinges

Markar Stainless Steel hinges (300 Series and 3500 Series) and carbon steel hinges (200 Series) are available with two labeling options: Underwriters Laboratories Inc. or Warnock Hersey International.

- 20-minute labeled wood doors
- One and a half hour labeled hollow metal and composite-core wood fire doors
- Three hour labeled hollow metal doors

Maximum Door Opening:

Single Doors: 4'0" x 10'0"

Pair of Doors: 8'0" x 10'0"

LISTED

In accordance with UL10C for positive pressure.

Behavioral Health Hinges

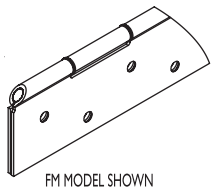

FM MODEL SHOWN

Copyright © 2015-2025, ASSA ABLOY Accessories and Door Controls Group, Inc., an ASSA ABLOY Group company. All rights reserved.
Reproduction in whole or in part without the express written permission of ASSA ABLOY Accessories and Door Controls Group, Inc. is prohibited.

PEMKO
ASSA ABLOY
Experience a safer and more open world

STANDARD POWDER COAT FINISHES

Tough, Durable, Long-Lasting

Designed for general purpose interior and exterior use and applications where maximum chemical and solvent resistance is required.

Performance Properties

The data below is based on 24 gauge Bonderite 1000 panels with 1.5 mil to 2.0 mil of high gloss formulation.

Adhesion (ASTM D-3359B): There is no lifting of ⅛" squares of coating between scribed lines in crosshatch adhesion testing using pressure sensitive adhesive backed tape.

Pencil Hardness (ASTM D-3363): 2H – 4H

Flexibility (ASTM D-522 modified): The coating withstands a 180° bend over a ¼" diameter mandrel without cracking or loss of adhesion.

Impact Resistance (ASTM D 2794 modified): The coating withstands 160 inch-pound impacts, both direct and reverse, without cracking or loss of adhesion using the standard Gardner impact tester.

Abrasion Resistance (ASTM D-4060 modified): The weight loss of coating after 1,000 cycles on a Taber abraser equipped with CS-10 wheels and operating under a 1 kilogram loading per wheel is on the order of 35 to 50 milligrams.

Salt Spray Resistance (ASTM B-117): Bonderite 1000 steel panels, in a scribed condition, exhibit no undercutting after 1,000 hours in 5% salt spray testing at 95°F and 95% relative humidity. There was no rusting or blistering on the panel face away from the scribe.

Humidity Resistance (ASTM D-2247): Bonderite 1000 steel panels in an unscribed condition exhibit no effect after 1000 hours exposure to 100% relative humidity at 100°F.

Chemical and Solvent Resistance: After 60 days immersion in the test fluid, the following data was obtained for epoxy powder coatings:

15% Hydraulic Acid	No Effect
Lacquer Thinner	No Effect
Dilute "HTH" Pool Chemical	No Effect
15% Sulfuric Acid	Pinhole Rust
15% Caustic Soda	#8 Blisters
Ammonia Hydroxide	#8 Blisters
Petrochloroethylene	No Effect
15% Acetic Acid	#4 Blisters
Gasoline	No Effect

Verification of resistance properties should be made for each chemical or solvent proposed for use with the coating.

Closest US Standard & BHMA Finishes

No minimum quantity.

PC-1	Dark Oxidized Satin Bronze	10BE
PC-2	White Suede	714
PC-3	Black Suede (BSP)	693
PC-4	Aluminum	689
PC-5	Sun Gold	706
PC-6	Light Copper	691
PC-7	Polished Brass	605

PC-7 available only on 100 & 300 series hinges

*NOTE: The PC-7 will have an additional charge for two-step polishing process.

Special Finishes

Polished Aluminum	US26	672
Polished Stainless	US32	629
Kynar Paint	With Color Approval	

*NOTE: Additional setup charges will apply.

Special Anodized Finishes

Gold Anodized	US3	310
Light Bronze Anodized	US9	311
Medium Bronze Anodized		312
Black Anodized	US19	315

Custom Powder Coat Finishes

All RAL Powder Coat finishes available. Sample color chip must accompany order. Priced at time of order.

U.S. Standard & B.H.M.A. Finish Codes

US3	310	gold anodized
US9	311	light bronze anodized
	312	medium bronze anodized
US20A	313	dark bronze anodized
US19	315	black anodized
USP	600	primed for paint
US2G	603	zinc plated
US28	628	clear anodized
US32	629	bright Stainless Steel
US32D	630	satin Stainless Steel
US26	672	bright polished aluminum
US28	689	aluminum paint
US20A	690	dark bronze paint
US10	691	light bronze paint
US19	693	black paint
US4	706	gold paint
	714	white paint

Copyright © 2015-2025, ASSA ABLOY Accessories and Door Controls Group, Inc., an ASSA ABLOY Group company. All rights reserved. Reproduction in whole or in part without the express written permission of ASSA ABLOY Accessories and Door Controls Group, Inc. is prohibited.

HINGE NUMBERING SYSTEM

Hinge Prefixes

EG	Edge Guard
FM	Edge Mount
FS	Full Surface
HG	Hinge/Guard
HM	Half Mortise
HS	Half Surface
SC	Swing Clear

Hinge Series

This series number indicates the type of hinge and base material used:

100	Aluminum barrel hinges with stainless pin
200	Carbon steel barrel hinges with stainless pin
300	Stainless steel barrel hinges with stainless pin
400	Spring loaded aluminum toilet partition hinge
600	14 Gauge 316 stainless steel pin and barrel security hinges
900	Spring loaded stainless steel toilet partition hinges
1900	Reinforcing pivots
3500	12 Gauge stainless steel pin and barrel security hinges

Hinge Models

The last two digits of the model number indicate the application:

00	Edge mount (formerly full mortise)
01	Full surface, 1/8" offset
02	Full surface, flush
03	Half surface, 1/8" offset
04	Half mortise, 1/8" offset
05	Edge mount hinge/guard
06	Half mortise hinge/guard
07	Double hinge/guard
08	Edge guard
09	Full surface, swing clear
10	Swing clear hinge/guard
11	Edge mount, self aligning
15	Edge mount, self aligning flush edge guard
21	Full surface inset, 3/4" offset
22	Edge mount hinge/guard, deep
23	Edge mount hinge/guard, deep, thru bolt
25	Edge mount swing clear
26	Edge mount hinge/guard, swing clear
27	Edge mount, safety hinge
29	Edge mount, self aligning

Other numbers are used for specific applications

Optional Suffixes

AMS	Adjustable Monitoring Switch
CTP	Current Transfer Preparation
DDP	Dutch Door Prep
EL	ElectroLynx® Wires (Specify 4, 8, or 12)
ETAP	Electrical Transfer Access Prep
EPT	Electric Power Transfer
HT	Hospital Tip
LL	Lead Lined
PC	Powder Coated
RB	Raised Barrel
WT	Wide Throw

Hinge Standard Lengths

Standard Hinge Length Conversion Chart

A 6'8"	door opening	=	actual length	79 3/16"
A 7'0"	door opening	=	actual length	83 1/8"
A 7'2"	door opening	=	actual length	85 1/8"
A 8'0"	door opening	=	actual length	95"
A 10'0"	door opening	=	actual length	118 3/4"

Custom hinge length will be evaluated at the time of request to ensure proper pin to knuckle alignment. Some custom length requests may be adjusted to ensure a proper hinge assembly. Specify handing on all custom hinge lengths.

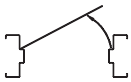

LEFT HAND

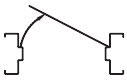

RIGHT HAND



LEFT HAND REVERSE



RIGHT HAND REVERSE

Copyright © 2015-2025, ASSA ABLOY Accessories and Door Controls Group, Inc., an ASSA ABLOY Group company. All rights reserved.
Reproduction in whole or in part without the express written permission of ASSA ABLOY Accessories and Door Controls Group, Inc. is prohibited.

PEMKO
ASSA ABLOY
Experience a safer and more open world

CONTINUOUS HINGE MODIFICATIONS

Special Length

Please specify handing on all custom hinge lengths

Some custom lengths may require two cuts due to location of screw holes

Hospital Tip

Available on all models except spring-loaded toilet partition hinges. Handing needed on some models and all cut down lengths.

Suffix hinge "-HT"

Helps provide a safe, clean environment

For FM300, welded cast iron hospital tip will be provided at the top and the bottom of the hinges. On powder coated FM300 hinges, hospital tip will not be powder coated and will have the steel finish

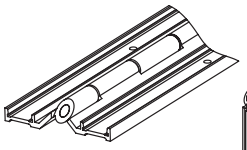

FS MODEL SHOWN

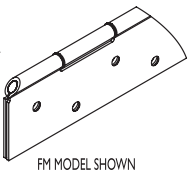

FM MODEL SHOWN

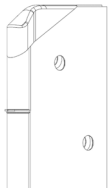

Dutch Door Prep

Available on all hinge models

Suffix hinge "-DDP"

Continuous frame leaf with two-piece door leaf

Indicate handing, clearances, door and frame heights, and materials when ordering

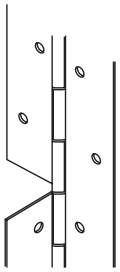

Wide Throw

Only available on 300 and 3500 series hinges

Markar Custom Hinge Information Form must be filled out

Reinforcement may be required on extreme wide throw applications

These conditions will be determined through a drawing approval process

Blank

Holes omitted for special applications, such as welded installation

Not available on adjustable models

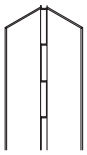

Welded End Pins

End pins are tack-welded and are non-removeable

Not available on aluminum, powder coated hinges and 200 series hinges

Plug Weld

Plug welding hole prep

Automatic Door Bottom Cut

Standard "U" shape cut accepts most automatic door bottoms

Make and model are needed

Removable Auto Door Bottom Prep (RADBP)

Auto door bottom cut out with cover plate

FMPLATE (FM300, HM304)

HGPLATE (HG311, HG315, HG329)

HGADJPLATE (HG305, HG310, HG326)FM3500PLATE (FM3500)

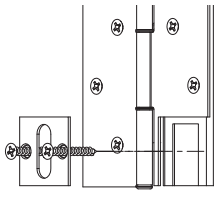

Copyright © 2015-2025, ASSA ABLOY Accessories and Door Controls Group, Inc., an ASSA ABLOY Group company. All rights reserved. Reproduction in whole or in part without the express written permission of ASSA ABLOY Accessories and Door Controls Group, Inc. is prohibited.

CONTINUOUS HINGE MODIFICATIONS (CONT.)

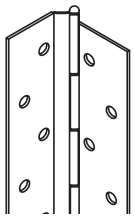

Raised Barrel (Swaged)

Available on all edge mount, half surface, and half mortise models except on aluminum hinges

Suffix hinge "-RB"

For cased open or center pivot doors

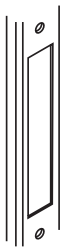

Standard Edge Guard Cut-Outs

The Edge Guard Order form must be filled out to properly locate the hardware cut-outs

$4\frac{7}{8}$" ASA strike

161 latch

161 strike

86 mortise

Manual flush bolt

Automatic flush bolt

Fire bolt

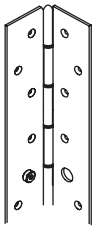

Security Studs

Stainless Steel security studs mounted to the frame leaf

Door leaf is drilled to accommodate studs

Three studs installed on hinges up to 7'2"

Four studs installed on hinges over 7'2"

Door and frame must be specially prepared to accommodate security studs

Custom Design

The engineering department will assist you in developing custom applications to solve any of your unique door hinging problems. This includes Sheared Leaf or Custom Hole Pattern modifications.

Markar Custom Hinge Information Form must be filled out

Lead Lined (Standard 4 Lbs./SQ.FT.)

Used for X-ray room doors and other locations where radiation leakage could be a problem

Available on surface mounted hinges and Markar EGT308 edge guard

Copyright © 2015-2025, ASSA ABLOY Accessories and Door Controls Group, Inc., an ASSA ABLOY Group company. All rights reserved.
Reproduction in whole or in part without the express written permission of ASSA ABLOY Accessories and Door Controls Group, Inc. is prohibited.

CONTINUOUS HINGE MODIFICATIONS *(Cont.)*

EL ElectroLynx® Current Transfer

EL4 For 300, 3500, 200, and 100 series edge mount only.
2 wires at 22 gauge and 2 wires at 26 gauge - with ElectroLynx® connectors (4 wire)

EL8 For 300, 3500, 200, and 100 series edge mount only.
2 wires at 22 gauge and 6 wires at 26 gauge - with ElectroLynx® connectors (8 wire)

EL12 For 300, 3500, 200, and 100 series edge mount only.
2 wires at 22 gauge and 10 wires at 26 gauge - with ElectroLynx® connectors (12 wire)

*We recommend an Electrical Transfer Access Prep (ETAP) with all ElectroLynx® modifications

Replacement wire harness available (EL4-REPLKIT, EL8-REPLKIT & EL12-REPLKIT)

ElectroLynx®

As part of their promise to provide innovative, fast and effective high security solutions to their customers, certain ASSA ABLOY Group brands offer ElectroLynx®, a universal quick-connect system that simplifies the electrification of the door opening.

ElectroLynx® is a registered trademark of ASSA ABLOY Inc.

ETAP Electrical Transfer Access Prep

Cutout prep for the AMS and EL modifications. This allows for easy, one-person access to wiring between the hinge and door

Security Fasteners

Specify Torx or Torx-Pin security fasterners in lieu of standard fasteners

Contact factory for compatible models

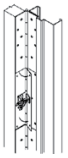

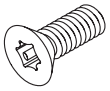

CTP Current Transfer Prep

Centerline of hinge is standard location

Hinge leaf cutout to accommodate Markar's EPT Electric Power Transfer or other manufacturers' power transfer units

Please provide center line location (from top of hinge to centerline of prep) and handing for all prep locations - see CTP Form on Page 79

Order form required; available online.

EPT Electric Power Transfer Units

EL-EPT	Stamped steel, for up to 105° opening
EL-EPTL	Stamped steel, long for 180° opening
EL-EPT-SC	Stamped steel, for swing clear hinges
EL-CEPTx32D	Cast Stainless Steel, satin
EL-CEPTx10B	Cast Stainless Steel, oil rubbed bronze

12-Wire with ElectroLynx® connectors standard on all power transfer units
CTP prep is additional charge

Note: Ordering EPT unit does not constitute CTP prep on hinge

Order form required, available online.

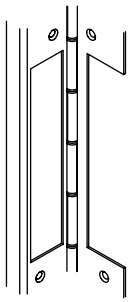

AMS Adjustable Monitoring Switch

Rigid welded assembly gives you the ability to adjust your monitoring switch to work with all applications 300 and 3500 Series

Rating: 30v AC/DC .25 amps MAX

We recommend an Electrical Transfer Access Prep (ETAP) with this modification.

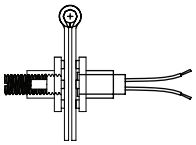

Copyright © 2015-2025, ASSA ABLOY Accessories and Door Controls Group, Inc., an ASSA ABLOY Group company. All rights reserved. Reproduction in whole or in part without the express written permission of ASSA ABLOY Accessories and Door Controls Group, Inc. is prohibited.

MARKAR 3500 SERIES STAINLESS STEEL PIN & BARREL CONTINUOUS HINGES

Short Form Architectural Specification:

Continuous hinges shall be full height piano-type hinge providing full height door support.

- Supports weights up to 600 lbs. 4'0" maximum door width
- Material to be 12 gauge (.105) Stainless Steel
- .187" diameter Stainless Steel pin (rod)
- Each knuckle 2", including nylon bearing at each separation for a quiet, smooth, self-lubricating operation
- Finish: US32D Satin Stainless Steel (630) Optional Finish: US32 Bright Stainless Steel (629), Scratch-Resistant Powder Coated Paint.
- All hinges shall be furnished with manufacturer's recommended hardware pack per specific model application
- Must be able to carry UL label for fire rated doors and frames up to 3 hours
- Hinges shall meet ANSI/BHMA Standard A156.26 Grade 1
- Symmetrically templated hole pattern

Note: 25-Year Warranty on Continuous Pin & Barrel Hinges
Note: Fire label for doors and frames should be placed on the header and top rail of fire rated doors and frames

MARKAR FM3500 EDGE MOUNT SECURITY HINGE

Standard Features

Barrel Type Hinge
.187" diameter Stainless Steel pin (rod)
Medical bearings
Stainless Steel end pins

Material
Heavy-duty 12 gauge (.105") Stainless Steel

Finishes
US32D Satin Stainless Steel (630)

Hospital Tip
Standard

Hole Pattern
Symmetrically templated

Standards
ANSI/BHMA Standard A156.26 Grade 1
ANSI/BHMA A156.18 for Materials and finishes

Mounting Hardware
Fasteners concealed when door is closed

Custom 12-24 x 7/16" S.S Phillips Flat Head Undercut Machine Screw

Capacity
Supports weights up to 600 lbs. 4'0" maximum door width

Standard Sizes
6'8", 7'0" , 7'2", 8'0", 10'0"

Handing
Handing not required on standard hinges. Specify handing when ordering a hinge with modification

Fire Rating
3 hours- hollow metal doors
90 minutes- hollow metal and composite
20 minutes- wood doors

Classified in accordance with UL10C for positive pressure

Fire-rated label

Windstorm
Evaluated in accordance with TAS 201-14, TAS 202-14, TAS 203-14, ASTM E330, ASTM E1886, ASTM E1996 and ANSI A250.13.

Corrosion Protection
Passed 200 hours of salt spray test as per ANSI BHMA A156.18-2020, American National Standards for Materials and finishes.

Optional Features

Finish
US32 Bright Stainless Steel (629)
Scratch-Resistant Powder Coated Paint

Hole Patterns
Plug weld hole pattern
Custom hole pattern

Fasteners
Tamper-proof security screws

Other Features
Custom lengths - specify in inches
Dutch door hinges - suffix "DDP"
Raised barrel - suffix "RB"
Welded End Pins
Security studs

Electrical Modifications
Adjustable Monitoring Switch - suffix "AMS"
Current Transfer Prep - suffix "CTP"
Electrical Transfer Access Prep - "ETAP"

ElectroLynx®
EL4 (4 wire), EL8 (8 wire), EL12 (12 wire)

This edge mount pin and barrel type hinge is fabricated with extra-heavy duty components for use on high traffic, high abuse doors. The hinge is specially designed and well suited for correctional facilities and other high security locations using up to 2 1/4" thick swing-type doors. Prison doors, gates, extremely tall doors and extra heavy doors are all good candidates for Markar's 3500 Security Hinge.

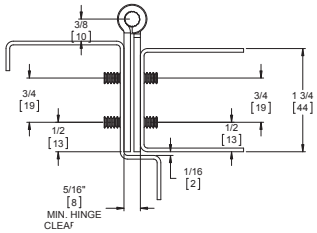

Door Closed

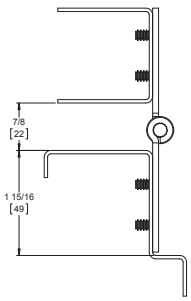

Door Open 180°

800-824-3018 | www.pemko.com
Check the web site for the up-to-date catalog

Copyright © 2015-2025, ASSA ABLOY Accessories and Door Controls Group, Inc., an ASSA ABLOY Group company. All rights reserved.
Reproduction in whole or in part without the express written permission of ASSA ABLOY Accessories and Door Controls Group, Inc. is prohibited.

PEMKO
ASSA ABLOY
Experience a safer and more open world

MARKAR FS3501 1/8" INSET FULL SURFACE SECURITY HINGE

Standard Features

Barrel Type Hinge
.187" diameter Stainless Steel pin (rod)
Medical bearings
Stainless Steel end pins

Material
Heavy-duty 12 gauge (.105")
Stainless Steel

Finishes
US32D Satin Stainless Steel (630)
Hospital Tip Standard

Standards
ANSI/BHMA Standard A156.26 Grade 1
ANSI/BHMA A156.18 for Materials and finishes

Mounting Hardware
Custom 12-24 x 7/16" S.S Phillips Flat Head Undercut Machine Screw

Capacity
Supports weights up to 600 lbs.
4'0" maximum door width

Standard Sizes
6'8", 7'0", 7'2", 8'0", 10'0"

Hole Pattern
Symmetrically templated

Handing
Specify handing

Fire Rating
3 hours- hollow metal doors
90 minutes- hollow metal and composite
20 minutes- wood doors

Classified in accordance with UL10C for positive pressure

Fire-rated label

Corrosion Protection
Passed 200 hours of salt spray test as per ANSI BHMA A156.18-2020, American National Standards for Materials and finishes.

Optional Features

Finish
US32 Bright Stainless Steel (629)
Scratch-Resistant Powder Coated Paint

Hole Patterns
Plug weld hole pattern
Custom hole pattern

Fasteners
Tamper-proof security screws

Other Features
Custom lengths – specify in inches
Dutch door hinges – suffix "DDP"
Welded End Pins

For 1/8" inset doors. This hinge allows for perfect alignment for the retrofitting of doors in correctional facilities and other high security locations using 2" thick swing-type doors. Prison doors, gates, extremely tall doors and extra heavy doors are all good candidates for Markar's 3501 Security Hinge.

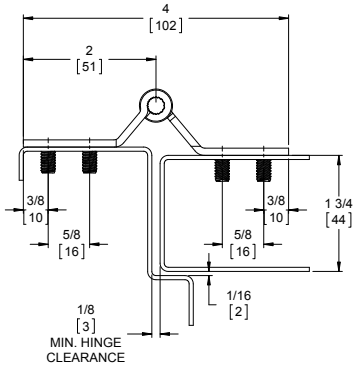

Door Closed

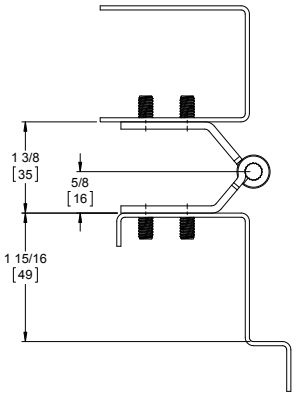

Door Open 180°

PEMKO
ASSA ABLOY
Experience a safer and more open world

800-824-3018 | www.pemko.com
Check the web site for the up-to-date catalog

Copyright © 2015-2025, ASSA ABLOY Accessories and Door Controls Group, Inc., an ASSA ABLOY Group company. All rights reserved. Reproduction in whole or in part without the express written permission of ASSA ABLOY Accessories and Door Controls Group, Inc. is prohibited.

MARKAR FS3502 FLUSH FULL SURFACE SECURITY HINGE

Standard Features

Barrel Type Hinge
.187" diameter Stainless Steel pin (rod)
Stainless Steel end pins
Medical bearings

Material
Heavy-duty 12 gauge (.105")
Stainless Steel

Finishes
US32D Satin Stainless Steel (630)

Hospital Tip Standard

Standards
ANSI/BHMA Standard A156.26 Grade 1
ANSI/BHMA A156.18 for Materials and finishes

Mounting Hardware
Custom 12-24 x 7/16" S.S Phillips Flat Head Undercut Machine Screw

Capacity
Supports weights up to 600 lbs.
4'0" maximum door width

Standard Sizes
6'8", 7'0", 7'2", 8'0", 10'0"

Hole Pattern
Symmetrically templated

Handing
Handing not required on standard hinges Specify handing when ordering a hinge with modification

Fire Rating
3 hours- hollow metal doors 90 minutes- hollow metal and composite 20 minutes- wood doors

Classified in accordance with UL10C for positive pressure

Fire-rated label

Corrosion Protection
Passed 200 hours of salt spray test as per ANSI BHMA A156.18-2020, American National Standards for Materials and finishes.

Optional Features

Finish
US32 Bright Stainless Steel (629)
Scratch-Resistant Powder Coated Paint

Hole Patterns
Plug weld hole pattern
Custom hole pattern

Fasteners
Tamper-proof security screws

Other Features
Custom lengths - specify in inches
Dutch door hinges - suffix "DDP"
Welded End Pins

This surface-mounted pin and barrel type hinge is fabricated with extra-heavy duty components and designed for solving door sag problems on high traffic, high abuse doors. This hinge is well suited for correctional facilities and other high security locations using 2" thick swing-type doors.

Prison doors, gates extremely tall doors and extra heavy doors are all good candidates for Markar's 3502 Security Hinge.

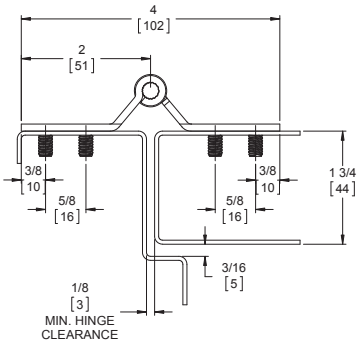

Door Closed

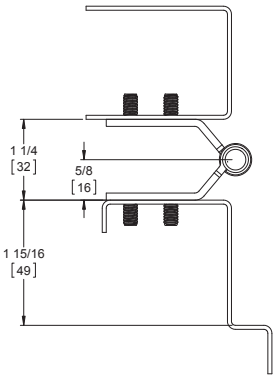

Door Open 180°

Copyright © 2015-2025, ASSA ABLOY Accessories and Door Controls Group, Inc., an ASSA ABLOY Group company. All rights reserved.
Reproduction in whole or in part without the express written permission of ASSA ABLOY Accessories and Door Controls Group, Inc. is prohibited.

PEMKO
ASSA ABLOY
Experience a safer and more open world

MARKAR HG3505 ADJUSTABLE HINGE GUARD

Standard Features

Barrel Type Hinge
.187" diameter Stainless Steel pin (rod)
Medical bearings
Stainless Steel end pins

Material
Heavy-duty 12-gauge (.105") Stainless Steel hinge leaves
14 gauge Stainless Steel angle on door leaf

Finishes
US32D Satin Stainless Steel (630)
Hospital Tip Standard

Standards
ANSI/BHMA Standard A156.26 Grade 1

Mounting Hardware
Custom 12-24 x 7/16" S.S Phillips Flat Head Undercut Machine Screw

Capacity
Supports weights up to 600 lbs.
4'0" maximum door width

Standard Sizes
6'8", 7'0", 7'2", 8'0", 10'0"

Hole Pattern
Symmetrically templated

Handing
Specify handing

Fire Rating
3 hours- hollow metal doors
90 minutes- hollow metal and composite 20 minutes- wood doors

Classified in accordance with UL10C for positive pressure

Fire-rated label

Corrosion Protection
Passed 200 hours of salt spray test as per ANSI BHMA A156.18-2020, American National Standards for Materials and finishes.

Optional Features

Finish
US32 Bright Stainless Steel (629)
Scratch-Resistant Powder Coated Paint

Mounting Hardware
Tamper-proof security screws
Adjust-A-Screw™ for correcting alignment problems up to 3/8"

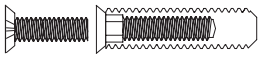

Other Features
Custom lengths – specify in inches
Custom hole pattern
Dutch door hinges – suffix "DDP"
Raised barrel - suffix "RB"
Welded end pins
Security studs

Electrical Modifications
Adjustable Monitoring Switch - suffix "AMS"
Current Transfer Prep - suffix "CTP"
Electronic Transfer Access Prep - suffix "ETAP"

ElectroLynx®
EL4 (4 wire), EL8 (8 wire), EL12 (12 wire)

The integral hinge guard protects the door from dings and gouges from carts and gurneys while providing clean lines and aesthetic appearance. Our HG products also have fire ratings up to and including 3 hours.

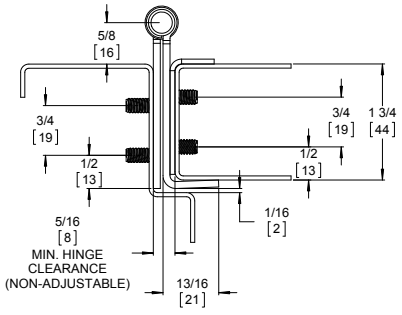

Door Closed

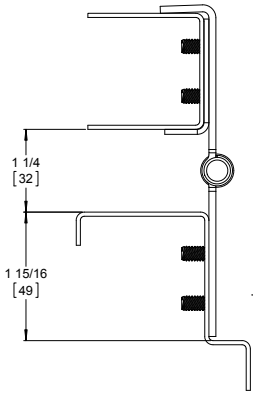

Door Open 180°

PEMKO
ASSA ABLOY
Experience a safer and more open world

800-824-3018 | www.pemko.com
Check the web site for the up-to-date catalog

Copyright © 2015-2025, ASSA ABLOY Accessories and Door Controls Group, Inc., an ASSA ABLOY Group company. All rights reserved. Reproduction in whole or in part without the express written permission of ASSA ABLOY Accessories and Door Controls Group, Inc. is prohibited.

MARKAR 300 SERIES STAINLESS STEEL PIN & BARREL CONTINUOUS HINGES

Short Form Architectural Specification:

Continuous hinges shall be full height piano-type hinge providing full height door support.

- Supports weights up to 300 lbs. 4' 0" maximum door width
- Material to be 14 gauge Stainless Steel
- .187" diameter Stainless Steel pin (rod)
- Exterior barrel diameter .438" ($^{7}/_{16}$")
- Each knuckle 2", including nylon bearing at each separation for a quiet, smooth, self-lubricating operation
- Finish: US32D Satin Stainless Steel (630) Optional Finish: US32 Bright Stainless Steel (629), Scratch-Resistant Powder Coated Paint.
- All hinges shall be furnished with manufacturer's recommended hardware pack per specific model application
- Must be able to carry Warnock Hersey Int. or UL for fire rated doors and frames up to 3 hours
- Hinges shall meet ANSI/BHMA Standard A 156.26 Grade 1
- Symmetrically templated hole pattern

NOTE: 25-Year Warranty on Continuous Pin & Barrel Hinges

NOTE: Fire label for doors and frames should be placed on the header and top rail of fire rated doors and frames

MARKAR FM300 EDGE MOUNT HINGE

Standard Features

Barrel Type Hinge
.187" diameter Stainless Steel pin (rod)
Medical bearings
Stainless Steel end pins

Material
Heavy-duty 14 gauge Stainless Steel

Finishes
US32D Satin Stainless Steel (630)

Standards
ANSI/BHMA Standard A156.26 Grade 1
ANSI/BHMA A156.18 for Materials and finishes

Hole Pattern
Symmetrically templated

Mounting Hardware
Fasteners concealed when door is closed
Custom 12-24 x $^{11}/_{16}$" S.S Phillips Flat Head Undercut TEK Screws

Capacity
Supports weights up to 300 lbs.
4'0" maximum door width

Standard Sizes
6'8", 7'0", 7'2", 8'0", 10'0"

Handing
Handing not required on standard hinges. Specify handing when ordering a hinge with modification.

Rating
3 hours- hollow metal doors 90 minutes- hollow metal and composite core wood fire doors
20 minutes- wood doors
Classified in accordance with UL10C for positive pressure
Fire-rated label
Windstorm
Evaluated in accordance with TAS 201-94, TAS 202-94, TAS 203-94, ASTM E330, ASTM E1886, ASTM E1996 and ANSI A250.13

Optional Features

Finishes
Scratch-Resistant Powder Coated Paint

Fasteners
Tamper-proof security screws

Other Features
Custom lengths- specify in inches
Custom hole pattern
Dutch door hinges- suffix "DDP"
Hospital tips - suffix "HT"
Raised barrel - suffix "RB"
Welded end pins
Security studs.

Electrical Modifications
Adjustable Monitoring Switch - "AMS"
Current Transfer Prep - suffix "CTP"
Electrical Transfer Access Prep - suffix "ETAP"

ElectroLynx®
EL4 (4 wire), EL8 (8 wire), EL12 (12 wire)

This edge-mounted pin & barrel hinge is used on many of today's high traffic, high abuse doors. The hinge works well in locations that would normally call out for anchor hinges, pivot reinforcement hinges or thrust pivot unit and hinge sets. This hinge saves on special door and frame preparation charges and makes the installer's job easier. It can be used on both fire labeled and non-labeled openings.

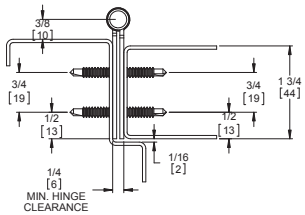

Door Closed

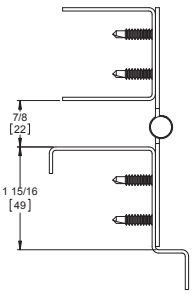

Door Open 180°

800-824-3018 | www.pemko.com
Check the web site for the up-to-date catalog

Copyright © 2015-2025, ASSA ABLOY Accessories and Door Controls Group, Inc., an ASSA ABLOY Group company. All rights reserved.
Reproduction in whole or in part without the express written permission of ASSA ABLOY Accessories and Door Controls Group, Inc. is prohibited.

PEMKO
ASSA ABLOY
Experience a safer and more open world

MARKAR FM300WT WIDE THROW EDGE MOUNT HINGES

Standard Features

Barrel Type Hinge
.187" diameter Stainless Steel pin (rod)
Medical bearings
Stainless Steel end pins

Material
Heavy-duty 14 gauge Stainless Steel
Heavy-duty 12 gauge support angles, where applicable

Finishes
US32D Satin Stainless Steel (630)

Standards
ANSI/BHMA Standard A156.26 Grade 1
ANSI/BHMA A156.18 for Materials and finishes

Mounting Hardware
Custom 12-24 x $^{11}/_{16}$" S.S Phillips Flat Head Undercut TEK Screws

Capacity
Weight: Consult factory
4'0" maximum door width

Standard Sizes
6'8", 7'0", 7'2", 8'0", 10'0"

Hole Pattern
Symmetrically templated

Handing
Handing not required on standard hinges. Specify handing when ordering a hinge with modification

Fire Rating
3 hours- hollow metal doors
90 minutes- hollow metal and composite core wood fire doors
20 minutes- wood doors
Classified in accordance with UL10C for positive pressure
Fire-rated label

Optional Features

Finishes
Scratch-Resistant Powder Coated Paint

Fasteners
Tamper-proof security screws

Other Features
Custom lengths- specify in inches
Custom hole pattern
Dutch door hinges- suffix "DDP"
Hospital tips - suffix "HT"
Welded end pins
Security studs

Electrical Modifications
Adjustable Monitoring Switch - suffix "AMS"
Current Transfer Prep - suffix "CTP"
Electrical Transfer Access Prep - suffix "ETAP"

ElectroLynx®
EL4 (4 wire), EL8 (8 wire), EL12 (12 wire)

- Available for WT10
- Available only with ETAP for all other WT models; extended lead times apply

---

This edge-mounted pin & barrel hinge is used on many of today's high traffic, high abuse doors. The hinge works well in locations that would normally call out for anchor hinges, pivot reinforcement hinges or thrust pivot unit and hinge sets. This hinge saves on special door and frame preparation charges and makes the installer's job easier. It can be used on both fire labeled and non-labeled openings.

FM300WT10

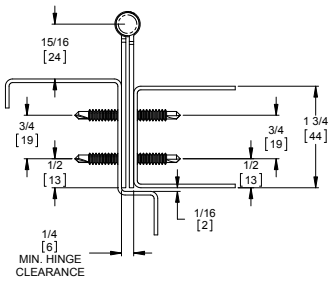

Door Closed

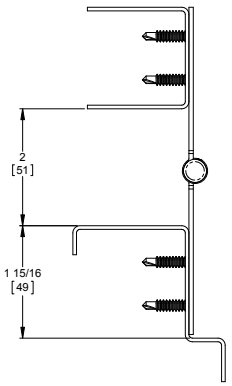

Door Open 180°

More profiles on next page

Copyright © 2015-2025, ASSA ABLOY Accessories and Door Controls Group, Inc., an ASSA ABLOY Group company. All rights reserved. Reproduction in whole or in part without the express written permission of ASSA ABLOY Accessories and Door Controls Group, Inc. is prohibited.

MARKAR FM300WT WIDE THROW EDGE MOUNT HINGES *(Cont.)*

FM300WT20

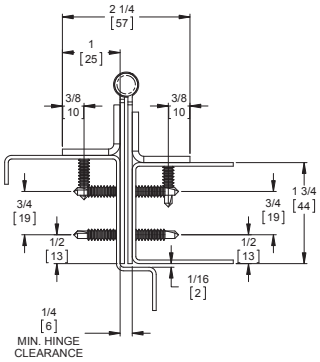

Door Closed

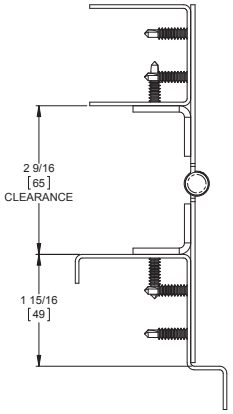

Door Open 180°

FM300WT30

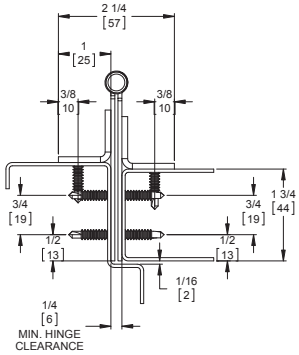

Door Closed

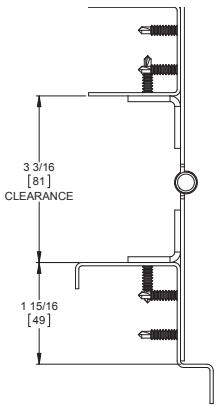

Door Open 180°

FM300WT40

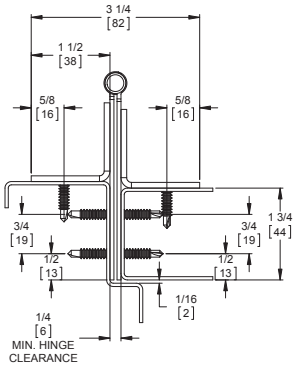

Door Closed

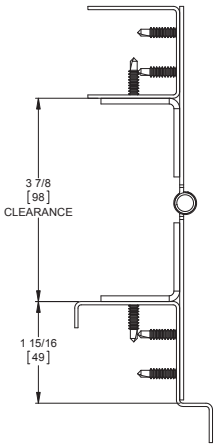

Door Open 180°

FM300WT50

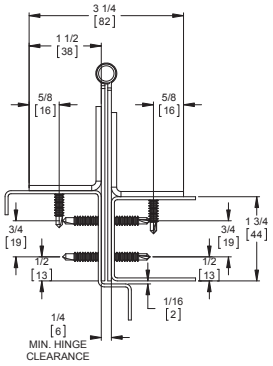

Door Closed

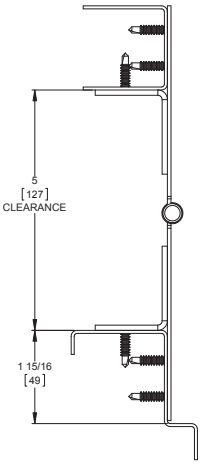

Door Open 180°

Copyright © 2015-2025, ASSA ABLOY Accessories and Door Controls Group, Inc., an ASSA ABLOY Group company. All rights reserved.
Reproduction in whole or in part without the express written permission of ASSA ABLOY Accessories and Door Controls Group, Inc. is prohibited.

PEMKO
ASSA ABLOY
Experience a safer and more open world

MARKAR FS301 1/8" INSET FULL SURFACE HINGE

Standard Features

Barrel Type Hinge
.187" diameter Stainless Steel pin (rod)
Medical bearings
Stainless Steel end pins

Material
Heavy-duty 14 gauge Stainless Steel
Cover - extruded aluminum

Finishes
US32D Satin Stainless Steel (630)
Cover - brushed aluminum

Standards
ANSI/BHMA Standard A156.26 Grade 1
ANSI/BHMA A156.18 for Materials and finishes

Mounting Hardware
Fasteners concealed underneath aluminum cover
1/4-14 x 3/4" Security TORX TEK Screws

Capacity
Supports weights up to 300 lbs.
4'0" maximum door width

Standard Sizes
6'8", 7'0", 7'2", 8'0", 10'0"

Handing
Not required for standard 7'0", 8'0" or 10'0". Handing required for 6'8" and 7'2" and for most optional features listed

Fire Rating
3 hours- hollow metal doors
90 minutes- hollow metal and composite core wood fire doors
20 minutes- wood doors

Classified in accordance with UL10C for positive pressure

Fire-rated label

Optional Features

Finishes
US32 Bright Stainless Steel (629)
Scratch-Resistant Powder Coated Paint

Fasteners
1 5/8" S.S. sleeve bolts
Tamper-proof security screws

Other Features
Custom lengths- specify in inches
Custom hole pattern
Dutch door hinges - suffix "DDP"
Hospital tips - suffix "HT"
Lead lined covers with 4 lbs. lead lining - suffix "LL"
Welded end pins

This surface-mounted pin & barrel continuous hinge can be used to repair or replace existing hinges on both fire labeled and non-labeled doors that have very tight clearances. The hinge has a built-in 1/8" offset to assist in weather seal and sound barrier areas.

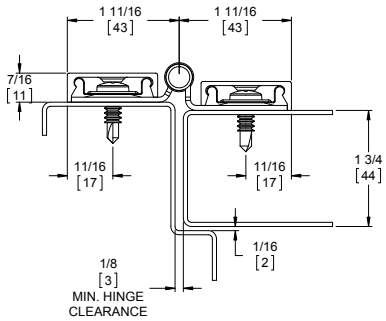

Door Closed

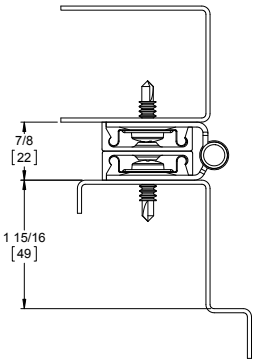

Door Open 180°

PEMKO
ASSA ABLOY
Experience a safer and more open world

800-824-3018 | www.pemko.com
Check the web site for the up-to-date catalog

Copyright © 2015-2025, ASSA ABLOY Accessories and Door Controls Group, Inc., an ASSA ABLOY Group company. All rights reserved. Reproduction in whole or in part without the express written permission of ASSA ABLOY Accessories and Door Controls Group, Inc. is prohibited.

MARKAR FS302 FULL SURFACE FLUSH MOUNT

Standard Features

Barrel Type Hinge
.187" diameter Stainless Steel pin (rod)
Medical bearings
Stainless Steel end pins

Material
Heavy-duty 14 gauge Stainless Steel
Cover - extruded aluminum

Finishes
US32D Satin Stainless Steel (630)
Cover - brushed aluminum

Standards
ANSI/BHMA Standard A156.26 Grade 1
ANSI/BHMA A156.18 for Materials and finishes

Mounting Hardware
Fasteners concealed underneath aluminum cover
1/4 - 14 x 3/4" Security TORX TEK Screws Capacity
Supports weights up to 300 lbs.
4'0" maximum door width

Standard Sizes
6'8", 7'0", 7'2", 8'0", 10'0"

Hole Pattern
Symmetrically templated

Handing
Handing not required on standard hinges. Specify handing when ordering a hinge with modification

Fire Rating
3 hours- hollow metal doors
90 minutes- hollow metal and composite core wood fire doors
20 minutes- wood doors

Classified in accordance with UL10C for positive pressure

Fire-rated label

Optional Features

Finishes
US32 Bright Stainless Steel (629)
Scratch-Resistant Powder Coated Paint

Fasteners
1 5/8" S.S. sleeve bolts
Tamper-proof security screws

Other Features
Custom lengths- specify in inches
Custom hole pattern
Dutch door hinges - suffix "DDP"
Hospital tips - suffix "HT"
Lead lined covers with 4 lbs. lead lining - suffix "LL"
Welded end pins

This surface-mounted pin & barrel continuous hinge can be used to replace and repair existing hinges on both fire labeled and non-labeled doors. Designed for retrofit market.

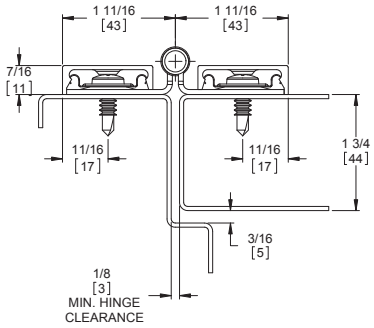

Door Closed

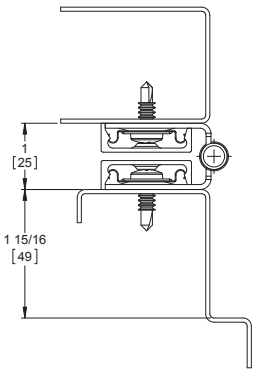

Door Open 180°

Copyright © 2015-2025, ASSA ABLOY Accessories and Door Controls Group, Inc., an ASSA ABLOY Group company. All rights reserved.
Reproduction in whole or in part without the express written permission of ASSA ABLOY Accessories and Door Controls Group, Inc. is prohibited.

PEMKO
ASSA ABLOY
Experience a safer and more open world

MARKAR HS303 HALF SURFACE HINGE

Standard Features

Barrel Type Hinge
.187" diameter Stainless Steel pin (rod)
Medical bearings
Stainless Steel end pins

Material
Heavy-duty 14 gauge Stainless Steel
Cover - extruded aluminum

Finishes
US32D Satin Stainless Steel (630)
Cover - brushed aluminum

Standards
ANSI/BHMA Standard A156.26 Grade 1
ANSI/BHMA A156.18 for Materials and finishes

Mounting Hardware
Fasteners concealed when door is closed
Custom 12-24 x 11/16" S.S Phillips Flat Head Undercut TEK Screws & 1/4-14 x 3/4" Security TORX TEK Screws

Capacity
Supports weights up to 300 lbs.
4'0" maximum door width

Sizes
6'8", 7'0", 7'2", 8'0", 10'0"

Hole Pattern
Symmetrically templated

Handing
Not required for standard 7'0", 8'0" or 10'0". Handing required for 6'8" and 7'0" and for most optional features listed

Fire Rating
3 hours- hollow metal doors
90 minutes- hollow metal and composite
20 minutes- wood doors

Classified in accordance with UL10C for positive pressure

Fire-rated label

Optional Features

Finish
US32 Bright Stainless Steel (629)
Scratch-Resistant Powder Coated Paint

Fasteners
1 5/8" S.S. sleeve bolts
Tamper-proof security screws

Other Features
Custom lengths - specify in inches
Custom hole pattern
Dutch door hinges - suffix "DDP"
Hospital tips - suffix "HT"
Raised barrel - suffix "RB"
Welded end pins
Lead lined cover with 4 lbs. lead lining - suffix "LL"

Electrical Modifications
Current Transfer Prep (frame leaf only) - suffix "CTP"

This half-surface pin & barrel continuous hinge can be used to repair or replace existing hinges on both fire labeled openings. The hinge fits into the gap left after standard butt hinges are removed. It can assist in reversing the handing of a door, or to reverse the swing of a door hung in an evenly-rabbetted frame. (Please consult factory for instructions for unevenly-rabbetted frames.)

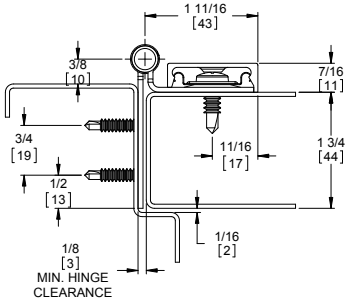

Door Closed

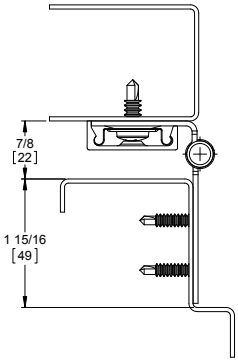

Door Open 180°

PEMKO
ASSA ABLOY

Experience a safer and more open world

800-824-3018 | www.pemko.com
Check the web site for the up-to-date catalog

Copyright © 2015-2025, ASSA ABLOY Accessories and Door Controls Group, Inc., an ASSA ABLOY Group company. All rights reserved. Reproduction in whole or in part without the express written permission of ASSA ABLOY Accessories and Door Controls Group, Inc. is prohibited.

MARKAR HM304 HALF MORTISE HINGE

Standard Features

Barrel Type Hinge
.187" diameter Stainless Steel pin (rod)
Medical bearings
Stainless Steel end pins

Material
Heavy-duty 14 gauge Stainless Steel
Cover - extruded aluminum

Finishes
US32D Satin Stainless Steel (630)
Cover - brushed aluminum

Standards
ANSI/BHMA Standard A156.26 Grade 1
ANSI/BHMA A156.18 for Materials and finishes

Mounting Hardware
Fasteners concealed when door is closed
Custom 12-24 x 11/16" S.S Phillips Flat Head Undercut TEK Screws & 1/4-14 x 3/4" Security TORX TEK Screws

Capacity
Supports weights up to 300 lbs.
4'0" maximum door width

Standard Sizes
6'8", 7'0", 7'2", 8'0", 10'0"

Hole Pattern
Symmetrically templated

Handing
Not required for standard 7'0", 8'0" or 10'0". Handing required for 6'8" and 7'2" and for most optional features listed

Fire Rating
3 hours- hollow metal doors
90 minutes- hollow metal and composite
20 minutes- wood doors

Classified in accordance with UL10C for positive pressure

Fire-rated label

Optional Features

Finishes
US32 Bright Stainless Steel (629)
Scratch-Resistant Powder Coated Paint

Fasteners
Tamper-proof security screws

Other Features
Custom lengths- specify in inches
Custom hole pattern
Dutch door hinges- suffix "DDP"
Hospital tips - suffix "HT"
Raised barrel - suffix "RB"
Welded end pins

Electrical Modifications
Current Transfer Prep (door leaf only) - suffix "CTP"

This pin & barrel type hinge is used on wooden doors to hide splits, chips and dents from traffic abuse. The surface mounted frame leaf allows for easy retrofit installation.

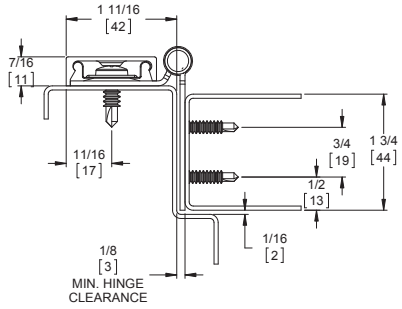

Door Closed

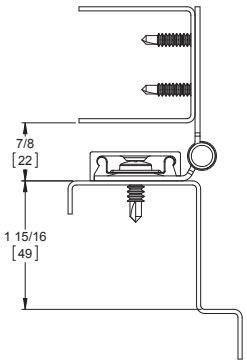

Door Open 180°

Copyright © 2015-2025, ASSA ABLOY Accessories and Door Controls Group, Inc., an ASSA ABLOY Group company. All rights reserved.
Reproduction in whole or in part without the express written permission of ASSA ABLOY Accessories and Door Controls Group, Inc. is prohibited.

PEMKO
ASSA ABLOY
Experience a safer and more open world

MARKAR HG305 ADJUSTABLE HINGE GUARD

Standard Features

Barrel Type Hinge
.187" diameter Stainless Steel pin (rod)
Medical bearings
Stainless Steel end pins

Material
Heavy-duty 14 gauge Stainless Steel

Finishes
US32D Satin Stainless Steel (630)

Standards
ANSI/BHMA Standard A156.26 Grade 1

Mounting Hardware
Fasteners concealed when door is closed
Custom 12-24 x 11/16" S.S Phillips Flat Head Undercut TEK Screws

Capacity
Supports weights up to 300 lbs.
4'0" maximum door width

Standard Sizes
6'8", 7'0", 7'2", 8'0", 10'0"

Hole Pattern
Symmetrically templated

Handing
Not required for standard 7'0", 8'0" or 10'0". Handing required for 6'8" and 7'2" and for most optional features listed

Fire Rating
3 hours- hollow metal doors
90 minutes- hollow metal and composite
20 minutes- wood doors
Classified in accordance with UL10C for positive pressure
Fire-rated label

Windstorm
Products is constructed in accordance with Guidelines FEMA 320 & FEMA 361.

Optional Features

Finish
US32 Bright Stainless Steel (629)
Scratch-Resistant Powder Coated Paint

Fasteners
Adjust-A-Screw™ for correcting frame fit problems up to 3/8"

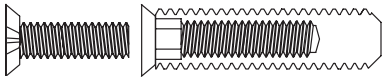

Other Features
Custom lengths- specify in inches
Custom hole pattern
Dutch door hinges- suffix "DDP"
Hospital tips – suffix "HT"
Raised barrel – suffix "RB"
Welded end pins
Security studs

Electrical Modifications
Adjustable Monitoring Switch - suffix "AMS"
Current Transfer Prep - suffix "CTP"
Electrical Transfer Access Prep - suffix "ETAP"

ElectroLynx®
EL4 (4 wire), EL8 (8 wire), EL12 (12 wire)

The integral hinge guard protects the door from dings and gouges from carts and gurneys while providing clean lines and aesthetic appearance. Our HG products also have fire ratings up to and including 3 hours. Not only that, but the wrap-around edge guard protects the door from unsightly dents and gouges and will deflect objects, preventing further damage.

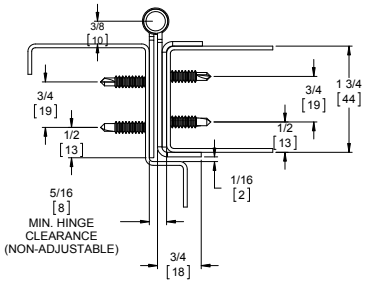

Door Closed

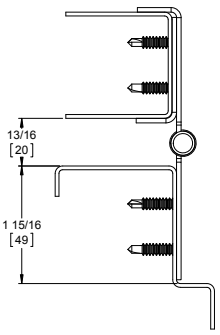

Door Open 180°

PEMKO
ASSA ABLOY
Experience a safer and more open world

800-824-3018 | www.pemko.com
Check the web site for the up-to-date catalog

Copyright © 2015-2025, ASSA ABLOY Accessories and Door Controls Group, Inc., an ASSA ABLOY Group company. All rights reserved. Reproduction in whole or in part without the express written permission of ASSA ABLOY Accessories and Door Controls Group, Inc. is prohibited.

MARKAR HG305WT WIDE THROW ADJUSTABLE HINGE GUARD

Standard Features

Barrel Type Hinge
.187" diameter Stainless Steel pin (rod)
Medical bearings
Stainless Steel end pins

Material
Heavy-duty 14 gauge Stainless Steel

Finishes
US32D Satin Stainless Steel (630)

Standards
ANSI/BHMA Standard A156.26 Grade 1

Mounting Hardware
Fasteners concealed when door is closed
Custom 12-24 x 11/16" S.S Phillips Flat Head Undercut TEK Screws

Capacity
Supports weights up to 300 lbs.
4'0" maximum door width

Standard Sizes
6'8", 7'0", 7'2", 8'0", 10'0"

Hole Pattern
Symmetrically templated

Handing
Not required for standard 7'0", 8'0" or 10'0". Handing required for 6'8" and 7'2" and for most optional features listed

Fire Rating
3 hours- hollow metal doors
90 minutes- hollow metal and composite
20 minutes- wood doors
Classified in accordance with UL10C for positive pressure
Fire-rated label

Windstorm
Products is constructed in accordance with Guidelines FEMA 320 & FEMA 361.

Optional Features

Finish
US32 Bright Stainless Steel (629)
Scratch-Resistant Powder Coated Paint

Fasteners
Adjust-A-Screw™ for correcting frame fit problems up to 3/8"

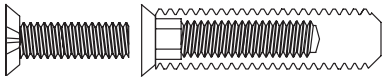

Other Features
Custom lengths- specify in inches
Custom hole pattern
Dutch door hinges- suffix "DDP"
Hospital tips – suffix "HT"
Raised barrel – suffix "RB"
Welded end pins
Security studs

Electrical Modifications
Adjustable Monitoring Switch - suffix "AMS"
Current Transfer Prep - suffix "CTP"
Electrical Transfer Access Prep - suffix "ETAP"

ElectroLynx®
EL4 (4 wire), EL8 (8 wire), EL12 (12 wire)

Designed for applications requiring additional clearance, the wide throw configuration allows doors to open fully. HG products also carry fire ratings of up to and including 3 hours. In addition, the wrap-around edge guard shields the door from unsightly dents and gouges while deflecting impact from passing equipment to help prevent further damage.

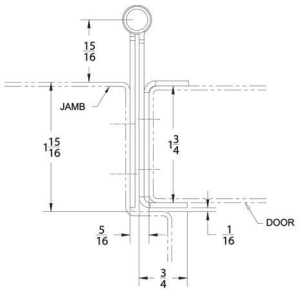

Door Closed

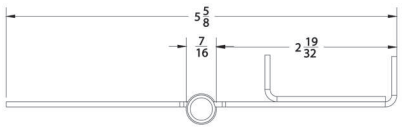

Door Open 180°

Copyright © 2015-2025, ASSA ABLOY Accessories and Door Controls Group, Inc., an ASSA ABLOY Group company. All rights reserved.
Reproduction in whole or in part without the express written permission of ASSA ABLOY Accessories and Door Controls Group, Inc. is prohibited.

PEMKO
ASSA ABLOY
Experience a safer and more open world

MARKAR FS/SC309 FULL SURFACE SWING CLEAR HINGE

Standard Features

Barrel Type Hinge
.187" diameter Stainless Steel pin (rod)
Medical bearings
Stainless Steel end pins

Material
Heavy-duty 14 gauge Stainless Steel
Cover - extruded aluminum

Finishes
US32D Satin Stainless Steel (630)
Cover - brushed aluminum

Standards
ANSI/BHMA Standard A156.26 Grade 1

Mounting Hardware
Fasteners concealed when door is closed
Custom 12-24 x 11/16" S.S Phillips Flat Head Undercut TEK Screws & 1/4-14 x 3/4" Security TORX TEK Screws

Capacity
Supports weights up to 300 lbs.
4'0" maximum door width

Standard Sizes
6'8", 7'0", 7'2", 8'0", 10'0"

Hole Pattern
Symmetrically templated

Handing
Not required for standard 7'0", 8'0" or 10'0". Specify handing for 6'8" and 7'2" and for most optional features

Fire Rating
3 hours- hollow metal doors
90 minutes- hollow metal and composite
20 minutes- wood doors

Classified in accordance with UL10C for positive pressure

Fire-rated label

Optional Features

Finish
US32 Bright Stainless Steel (629)
Scratch-Resistant Powder Coated Paint

Fasteners
Tamper-proof security screws

Other Features
Custom lengths- specify in inches
Custom hole pattern
1 5/8" S.S. aluminum sleeve bolts
Dutch door hinges - suffix "DDP"
Hospital tips - suffix "HT"
Lead lined cover with 4 lbs. lead lining - suffix "LL"
Welded End Pins

This hinge is used to ensure that a door opened to a 90-degree angle is removed from the opening. This hinge will mount on a 1 3/4" face, and is especially useful for ADA upgrade work.

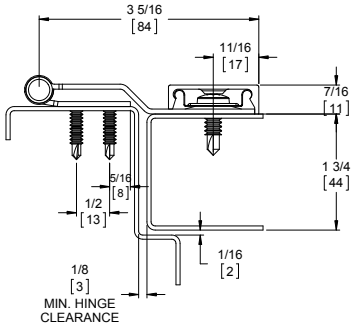

Door Closed

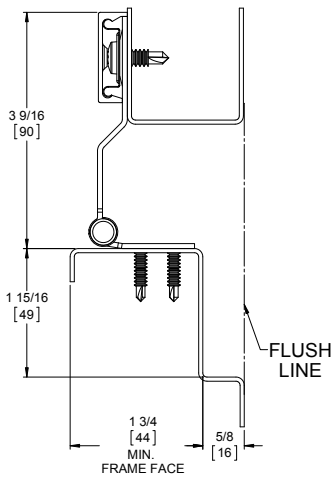

Door Open 90°

PEMKO
ASSA ABLOY
Experience a safer and more open world

800-824-3018 | www.pemko.com
Check the web site for the up-to-date catalog

Copyright © 2015-2025, ASSA ABLOY Accessories and Door Controls Group, Inc., an ASSA ABLOY Group company. All rights reserved. Reproduction in whole or in part without the express written permission of ASSA ABLOY Accessories and Door Controls Group, Inc. is prohibited.

MARKAR HG310 SWING CLEAR ADJUSTABLE HINGE GUARD

Standard Features

Barrel Type Hinge
.187" diameter Stainless Steel pin (rod)
Medical bearings
Stainless Steel end pins

Material
Heavy-duty 14 gauge Stainless Steel

Finishes
US32D Satin Stainless Steel (630)

Standards
ANSI/BHMA Standard A156.26 Grade 1

Mounting Hardware
Fasteners concealed when door is closed
Custom 12-24 x 11/16" S.S Phillips Flat Head Undercut TEK Screws

Capacity
Supports weights up to 300 lbs.
4'0" maximum door width

Standard Sizes
6'8", 7'0", 7'2", 8'0", 10'0"

Hole Pattern
Symmetrically templated

Handing
Not required for standard 7'0", 8'0" or 10'0". Specify handing for 6'8" and 7'2" and for most optional features

Door Edge
Square hinge edge
Recommend Adjust-A-Screw for beveled hinge edge

Fire Rating
3 hours- hollow metal doors
90 minutes- hollow metal and composite core wood fire doors
20 minutes- wood doors

Classified in accordance with UL10C for positive pressure

Fire-rated label

Optional Features

Finishes
US32 Bright Stainless Steel (629)
Scratch-Resistant Powder Coated Paint

Fasteners
Tamper-proof security screws

Adjust-A-Screws™ for correcting frame fit problems up to 3/8"

Other Features
Custom lengths- specify in inches
Custom hole pattern
Dutch door hinges - suffix "DDP"
Hospital tips - suffix "HT"
Welded End Pins

Electrical Modifications
Current Transfer Prep (door leaf only) - suffix "CTP"

(EL-EPT-SC Power Transfer Recommended)

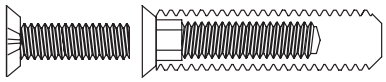

The ADA-compliant hinge is used on operating room doors to swing the door out of the opening when moving equipment in and out. The hinge guard also protects the door in the open position.

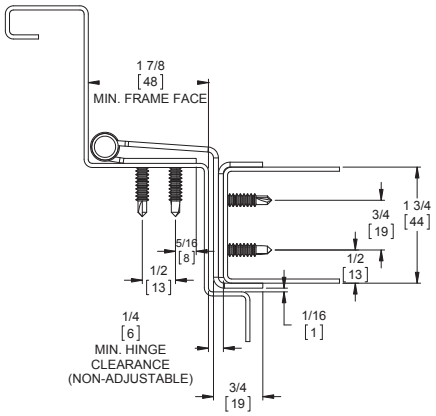

Door Closed

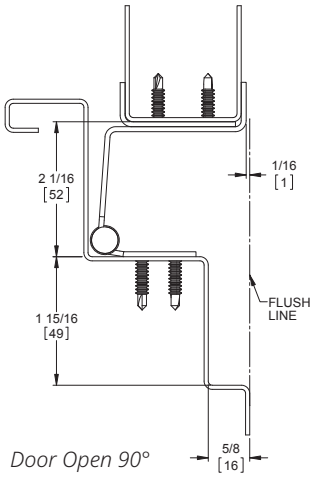

Door Open 90°

Copyright © 2015-2025, ASSA ABLOY Accessories and Door Controls Group, Inc., an ASSA ABLOY Group company. All rights reserved.
Reproduction in whole or in part without the express written permission of ASSA ABLOY Accessories and Door Controls Group, Inc. is prohibited.

PEMKO
ASSA ABLOY
Experience a safer and more open world

MARKAR HG311 SWING CLEAR HINGE GUARD

Standard Features

Barrel Type Hinge
.187" diameter Stainless Steel pin (rod)
Medical bearings
Stainless Steel end pins

Material
Heavy-duty 14 gauge Stainless Steel

Finishes
US32D Satin Stainless Steel (630)

Standards
ANSI/BHMA Standard A156.26 Grade 1

Mounting Hardware
Fasteners concealed when door is closed
Custom 12-24 x $^{11}/_{16}$" S.S Phillips Flat Head Undercut TEK Screws

Capacity
Supports weights up to 300 lbs.
4'0" maximum door width

Standard Sizes
6'8", 7'0", 7'2", 8'0", 10'0"

Hole Pattern
Symmetrically templated

Handing
Not required for standard 7'0", 8'0" or 10'0". Specify handing for 6'8" and 7'2" and for most optional features

Door Edge
Square hinge edge
For beveled hinge edge use HG310

Fire Rating
3 hours- hollow metal doors
90 minutes- hollow metal and composite core wood fire doors
20 minutes- wood doors

Classified in accordance with UL10C for positive pressure

Fire-rated label

Optional Features

Finishes
US32 Bright Stainless Steel (629)
Scratch-Resistant Powder Coated Paint

Fasteners
Tamper-proof security screws

Other Features
Custom lengths- specify in inches
Custom hole pattern
Dutch door hinges - suffix "DDP"
Hospital tips - suffix "HT"
Welded End Pins

Electrical Modifications
Current Transfer Prep (door leaf only) - suffix "CTP"
(EL-EPT-SC Power Transfer Recommended)

This surface applied swing clear version allows doors to meet ADA requirements. The single wrap protects door edges from cart damage.

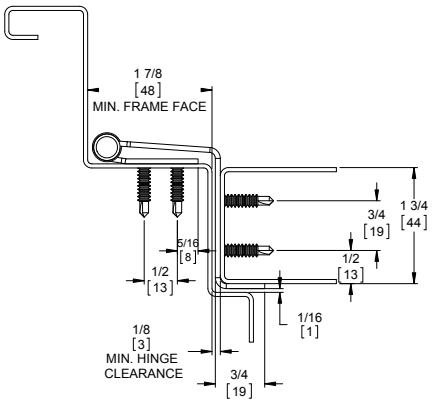

Door Closed

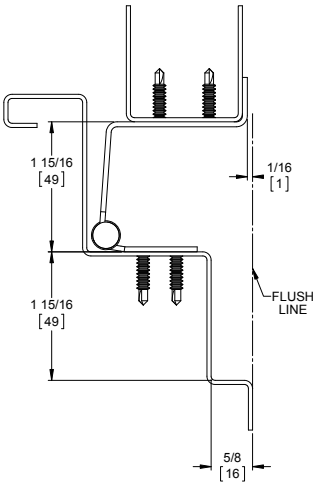

Door Open 90°

PEMKO
ASSA ABLOY
Experience a safer and more open world

800-824-3018 | www.pemko.com
Check the web site for the up-to-date catalog

Copyright © 2015-2025, ASSA ABLOY Accessories and Door Controls Group, Inc., an ASSA ABLOY Group company. All rights reserved. Reproduction in whole or in part without the express written permission of ASSA ABLOY Accessories and Door Controls Group, Inc. is prohibited.

MARKAR HG315 EDGE MOUNT HINGE GUARD

Standard Features

Barrel Type Hinge
.187" diameter Stainless Steel pin (rod)
Medical bearings
Stainless Steel end pins

Material
Heavy-duty 14 gauge Stainless Steel

Finishes
US32D Satin Stainless Steel (630)

Standards
ANSI/BHMA Standard A156.26 Grade 1

Mounting Hardware
Fasteners concealed when door is closed
Custom 12-24 x 11/16" S.S Phillips Flat Head Undercut TEK Screws

Capacity
Supports weights up to 300 lbs.
4'0" maximum door width

Standard Sizes
6'8", 7'0", 7'2", 8'0", 10'0"

Hole Pattern
Symmetrically templated

Handing
Not required for standard 7'0", 8'0" or 10'0". Specify handing for 6'8" and 7'2" and for most optional features

Fire Rating
3 hours- hollow metal doors
90 minutes- hollow metal and composite core wood fire doors
20 minutes- wood doors

Classified in accordance with UL10C for positive pressure

Fire-rated label

Optional Features

Finishes
US32 Bright Stainless Steel (629)
Scratch-Resistant Powder Coated Paint

Fasteners
Tamper-proof security screws

Other Features
Custom lengths- specify in inches
Custom hole pattern
Dutch door hinges- suffix "DDP"
Hospital tips - suffix "HT"
Raised barrel - suffix "RB"
Welded end pins
Security studs

Electrical Modifications
Adjustable Monitoring Switch - suffix "AMS"
Current Transfer Prep - suffix "CTP"
Electrical Transfer Access Prep - suffix "ETAP"

ElectroLynx®
EL4 (4 wire), EL8 (8 wire), EL12 (12 wire)

Featuring our unique edge guard, this economical hinge prevents objects from being placed between the door and frame as well as protects the door's edge while supporting the door's weight along the entire length of the jamb.

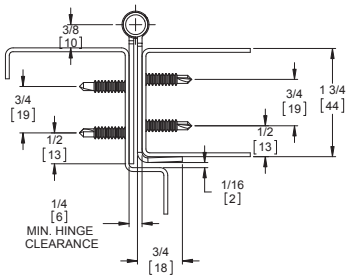

Door Closed

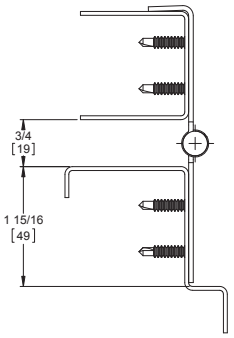

Door Open 180°

Copyright © 2015-2025, ASSA ABLOY Accessories and Door Controls Group, Inc., an ASSA ABLOY Group company. All rights reserved.
Reproduction in whole or in part without the express written permission of ASSA ABLOY Accessories and Door Controls Group, Inc. is prohibited.

PEMKO
ASSA ABLOY
Experience a safer and more open world

MARKAR HG323 EDGE MOUNT HINGE GUARD

Standard Features

Barrel Type Hinge
.187" diameter Stainless Steel pin (rod)
Medical bearings
Stainless Steel end pins

Material
Heavy-duty 14 gauge Stainless Steel

Finishes
US32D Satin Stainless Steel (630)

Standards
ANSI/BHMA Standard A156.26
Grade 1

Mounting Hardware
Fasteners concealed when door is closed
Custom 12-24 x 11/16" S.S Phillips Flat Head Undercut TEK Screws & 1/4-20 x 1 5/8 Thru Bolt Stainless Steel

Capacity
Supports weights up to 300 lbs.
4'0" maximum door width

Standard Sizes
6'8", 7'0", 7'2", 8'0", 10'0"

Hole Pattern
Symmetrically templated

Handing
Not required for standard 7'0", 8'0" or 10'0". Specify handing for 6'8" and 7'2" and for most optional features

Fire Rating
3 hours- hollow metal doors
90 minutes- hollow metal and composite core wood fire doors
20 minutes- wood doors

Classified in accordance with UL10C for positive pressure

Fire-rated label

Optional Features

Finishes
US32 Bright Stainless Steel (629)
Scratch-Resistant Powder Coated Paint

Fasteners
Tamper-proof security screws

Other Features
Custom lengths- specify in inches
Custom hole pattern
Dutch door hinges - suffix "DDP"
Hospital tips - suffix "HT"
Raised barrel - suffix "RB"
Special sheared leaf

Electrical Modifications
Adjustable Monitoring Switch – suffix "AMS"
Current Transfer Prep – suffix "CTP"
Electrical Transfer Access Prep - suffix "ETAP"

ElectroLynx®
EL4 (4 wire), EL8 (8 wire), EL12 (12 wire)

This extended wrap model allows you to sandwich the door between two leafs of Stainless Steel and through bolt them together. It is ideal where doors have split and you want to save them.

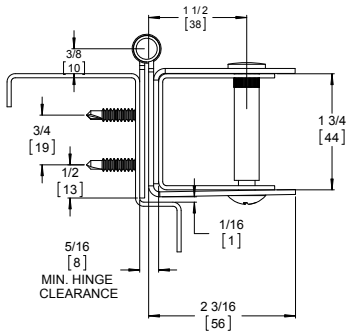

Door Closed

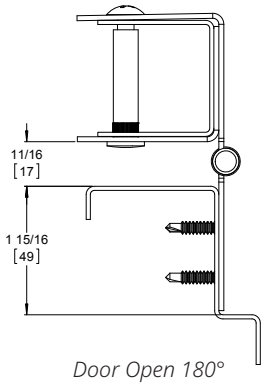

Door Open 180°

800-824-3018 | www.pemko.com
Check the web site for the up-to-date catalog

Copyright © 2015-2025, ASSA ABLOY Accessories and Door Controls Group, Inc., an ASSA ABLOY Group company. All rights reserved. Reproduction in whole or in part without the express written permission of ASSA ABLOY Accessories and Door Controls Group, Inc. is prohibited.

MARKAR HG326 SWING CLEAR ADJUSTABLE HINGE GUARD

Standard Features

Barrel Type Hinge
.187" diameter Stainless Steel pin (rod)
Medical bearings
Stainless Steel end pins

Material
Heavy-duty 14 gauge Stainless Steel

Finishes
US32D Satin Stainless Steel (630)

Standards
ANSI/BHMA Standard A156.26 Grade 1

Mounting Hardware
Custom 12-24 x 11/16" S.S Phillips Flat Head Undercut TEK Screws

Capacity
Supports weights up to 300 lbs.
4'0" maximum door width

Standard Sizes
6'8", 7'0", 7'2", 8'0", 10'0"

Hole Pattern
Symmetrically templated

Door Edge
Square hinge edge
Recommend Adjust-A-Screw for beveled hinge edge

Handing
Not required for standard 7'0", 8'0" or 10'0". Specify handing for 6'8" and 7'2" and for most optional features

Fire Rating
3 hours- hollow metal doors
90 minutes- hollow metal and composite core wood fire doors
20 minutes- wood doors

Classified in accordance with UL10C for positive pressure

Fire-rated label

Optional Features

Finishes
US32 Bright Stainless Steel (629)
Scratch-Resistant Powder Coated Paint

Other Features
Custom lengths- specify in inches
Custom hole pattern
Dutch door hinges- suffix "DDP"
Hospital tips - suffix "HT"
Welded end pins

Fasteners
Tamper-proof security screws
Adjust-A-Screw™ for correcting frame fit problems up to 3/8"

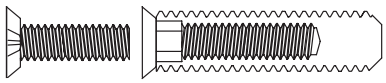

Electrical Modifications
Adjustable Monitoring Switch – suffix "AMS"
Current Transfer Prep - suffix "CTP"
(EL-EPT-SC Power Transfer Recommended)

The incorporated edge guard protects the door from unsightly dents and gouges while also protecting the hinge from vandalism.

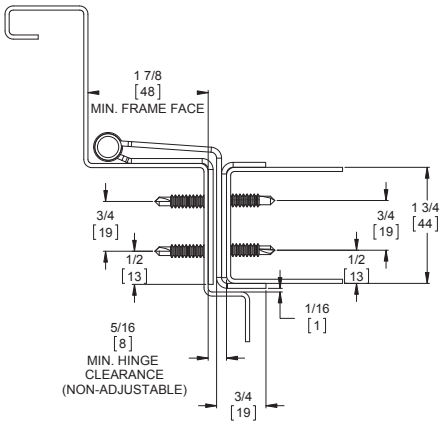

Door Closed

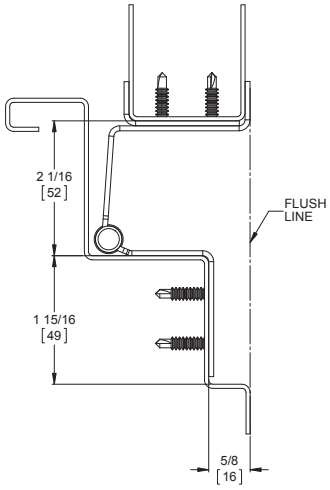

Door Open 90°

Copyright © 2015-2025, ASSA ABLOY Accessories and Door Controls Group, Inc., an ASSA ABLOY Group company. All rights reserved.
Reproduction in whole or in part without the express written permission of ASSA ABLOY Accessories and Door Controls Group, Inc. is prohibited.

PEMKO
ASSA ABLOY
Experience a safer and more open world

MARKAR HG329 SWING CLEAR HINGE GUARD FOR SQUARE EDGE DOOR

Standard Features

Barrel Type Hinge
.187" diameter Stainless Steel pin (rod)

Medical bearings
Stainless Steel end pins

Material
Heavy-duty 14 gauge Stainless Steel

Finishes
US32D Satin Stainless Steel (630)

Standards
ANSI/BHMA Standard A156.26 Grade 1

Mounting Hardware
Fasteners concealed when door is closed
Custom 12-24 x 11/16" S.S Phillips Flat Head Undercut TEK Screws

Capacity
Supports weights up to 300 lbs.
4'0" maximum door width

Standard Sizes
6'8", 7'0", 7'2", 8'0", 10'0"

Door Edge
Square hinge edge
For beveled hinge edge use HG326

Hole Pattern
Symmetrically templated
Specify handing

Fire Rating
3 hours- hollow metal doors
90 minutes- hollow metal and composite core wood fire doors
20 minutes- wood doors

Classified in accordance with UL10C for positive pressure

Fire-rated label

Optional Features

Finishes
US32 Bright Stainless Steel (629)
Scratch-Resistant Powder Coated Paint

Other Features
Custom lengths- specify in inches
Custom hole pattern
Dutch door hinges- suffix "DDP"
Hospital tips - suffix "HT"
Welded end pins

Fasteners
Tamper-proof security screws

Electrical Modifications
Adjustable Monitoring Switch - suffix "AMS" Current Transfer Prep - suffix "CTP" (EL-EPT-SC Power Transfer Recommended)

The incorporated edge guard protects the door from unsightly dents and gouges while also protecting the hinge from vandalism.

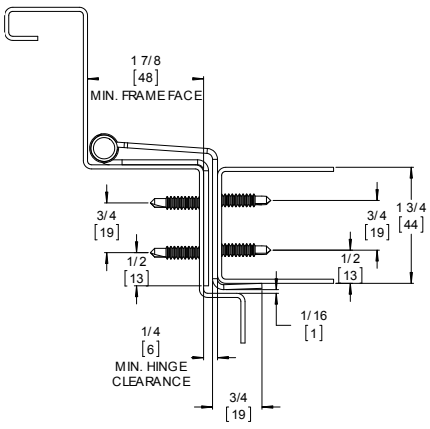

Door Closed

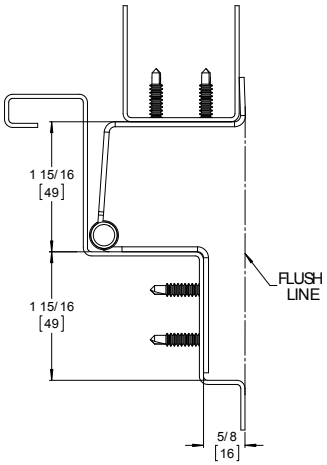

Door Open 90°

PEMKO
ASSA ABLOY
Experience a safer and more open world

800-824-3018 | www.pemko.com
Check the web site for the up-to-date catalog

Copyright © 2015-2025, ASSA ABLOY Accessories and Door Controls Group, Inc., an ASSA ABLOY Group company. All rights reserved. Reproduction in whole or in part without the express written permission of ASSA ABLOY Accessories and Door Controls Group, Inc. is prohibited.

MARKAR EG308 ADJUSTABLE EDGE GUARD

Standard Features

Material
Heavy-duty 16 gauge stainless steel

Finishes
US32D Satin Stainless Steel (630)

Mounting Hardware
Fasteners concealed when door is closed

Included fasteners are:

Custom 12-24 x 11/16" S.S Phillips Flat Head Undercut TEK Screws
Custom 12-24 x 1 1/2" S.S. Phillips Flat Head Particle Board Screws
Order form required, available online.

Standard Sizes
6'8", 7'0" ,7'2", 8'0", 10'0"

Door Edge
Specify square or beveled edge when ordering (beveled edge standard)

Fire Rating
3 hours- hollow metal doors
90 minutes- hollow metal and composite
20 minutes- wood doors

Fire-rated label

MAY NOT APPLY TO ALL WOOD DOORS. PLEASE CONSULT FACTORY FOR SPECIFIC WOOD DOOR APPLICATIONS.

Optional Features

Finish
US32 Bright Stainless Steel (629)
Scratch-Resistant Powder Coated Paint

Hardware Cutouts
(Edge Guard order form must be filled out)
Flush bolts
ASA strike
Deadlock strike and latch
86 edge
Hospital latch
161 cutout

Fasteners
Tamper-proof security screws
Adjust-A-Screw™ for correcting frame fit problems up to 3/8"

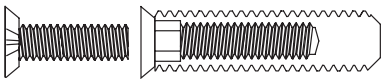

Other Features
Custom lengths - specify in inches
Staggered hole pattern for lead lined doors

Custom cutouts
Dutch door application - suffix "DDP"

This fire-labeled edge guard is used in conjunction with the HG305 Hinge/Guard for a balanced aesthetic look. It also provides protection for the leading edge of the door.

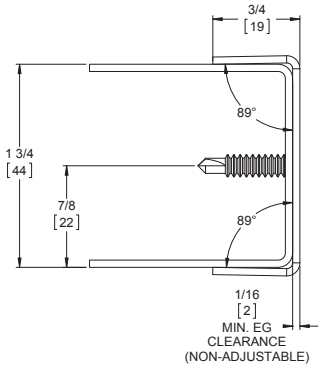

Square edge door

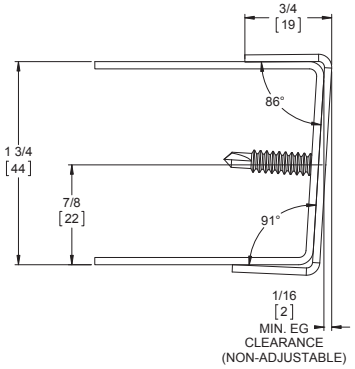

Bevel edge door

Copyright © 2015-2025, ASSA ABLOY Accessories and Door Controls Group, Inc., an ASSA ABLOY Group company. All rights reserved.
Reproduction in whole or in part without the express written permission of ASSA ABLOY Accessories and Door Controls Group, Inc. is prohibited.

PEMKO
ASSA ABLOY
Experience a safer and more open world

MARKAR EGC308 SINGLE RETURN EDGE GUARD

Standard Features

Material
Heavy-duty 16 gauge stainless steel

Finishes
US32D Satin Stainless Steel (630)

Mounting Hardware
Fasteners concealed when door is closed
Included fasteners are:
Custom 12-24 x 11/16" S.S Phillips Flat Head Undercut TEK Screws
Custom 12-24 x 1 1/2" S.S. Phillips Flat Head Particle Board Screws
Order form required, available online.

Standard Sizes
6'8", 7'0", 7'2", 8'0", 10'0"

Door Edge
Specify square or beveled edge when ordering (beveled edge standard)

Fire Rating
3 hours- hollow metal doors
90 minutes- hollow metal and composite
20 minutes- wood doors

Fire-rated label

MAY NOT APPLY TO ALL WOOD DOORS. PLEASE CONSULT FACTORY FOR SPECIFIC WOOD DOOR APPLICATIONS.

Optional Features

Finish
US32 Bright Stainless Steel (629)
Scratch-Resistant Powder Coated Paint

Hardware Cutouts
(Edge Guard order form must be filled out)
Flush bolts
ASA strike
Deadlock strike and latch
86 edge
Hospital latch
161 cutout

Fasteners
Tamper-proof security screws

Other Features
Custom lengths - specify in inches
Staggered hole pattern for lead lined doors
Custom cutouts
Dutch door application - suffix "DDP"

This fire-labeled edge guard works with the HG315 Hinge/Guard. It provides protection to the leading edge of the door, while maintaining the door's aesthetic appearance in the closed position.

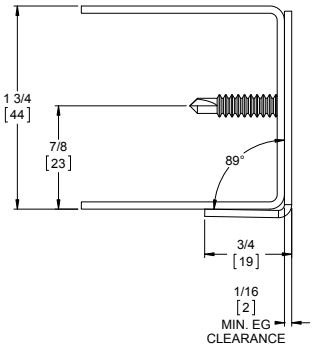

Square edge door

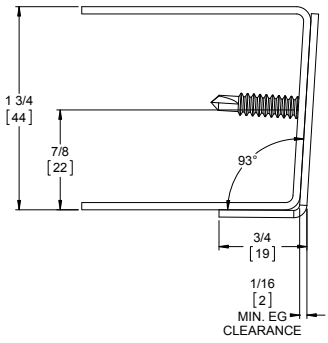

Bevel edge door

PEMKO
ASSA ABLOY
Experience a safer and more open world

800-824-3018 | www.pemko.com
Check the web site for the up-to-date catalog

Copyright © 2015-2025, ASSA ABLOY Accessories and Door Controls Group, Inc., an ASSA ABLOY Group company. All rights reserved. Reproduction in whole or in part without the express written permission of ASSA ABLOY Accessories and Door Controls Group, Inc. is prohibited.

MARKAR EGL308 LONG LEG EDGE GUARD

Standard Features

Material
Heavy-duty 16 gauge stainless steel

Finishes
US32D Satin Stainless Steel (630)

Mounting Hardware
Fasteners concealed when door is closed

Included fasteners are:

Custom 12-24 x 11/16" S.S Phillips Flat Head Undercut TEK Screws
Custom 12-24 x 1 1/2" S.S. Phillips Flat Head Particle Board Screws
Order form required, available online.

Standard Sizes
6'8", 7'0" ,7'2", 8'0", 10'0"

Door Edge
Specify square or beveled edge when ordering (beveled edge standard)

Fire Rating
3 hours- hollow metal doors
90 minutes- hollow metal and composite
20 minutes- wood doors

Fire-rated label

MAY NOT APPLY TO ALL WOOD DOORS. PLEASE CONSULT FACTORY FOR SPECIFIC WOOD DOOR APPLICATIONS.

Optional Features

Finish
US32 Bright Stainless Steel (629)
Scratch-Resistant Powder Coated Paint

Hardware Cutouts
(Edge Guard order form must be filled out)
Flush bolts
ASA strike
Deadlock strike and latch
86 edge
Hospital latch
161 cutout

Fasteners
Tamper-proof security screws
Adjust-A-Screw™ for correcting frame fit problems up to 3/8"

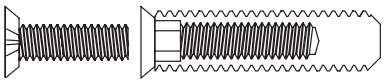

Other Features
Custom lengths - specify in inches
Staggered hole pattern for lead lined doors

Custom cutouts
Dutch door application - suffix "DDP"

This fire-labeled edge guard is used in conjunction with the HG305 Hinge/Guard for a balanced aesthetic look. It also provides protection for the leading edge of the door.

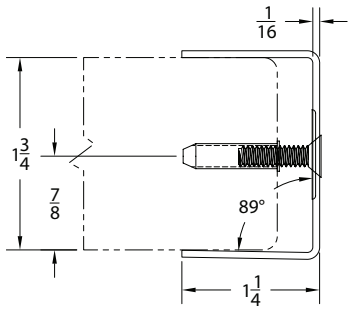

Square edge door

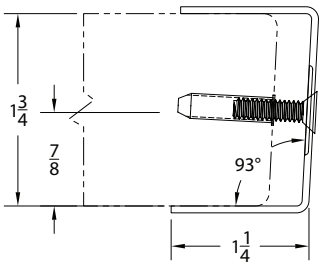

Bevel edge door

Copyright © 2015-2025, ASSA ABLOY Accessories and Door Controls Group, Inc., an ASSA ABLOY Group company. All rights reserved.
Reproduction in whole or in part without the express written permission of ASSA ABLOY Accessories and Door Controls Group, Inc. is prohibited.

PEMKO
ASSA ABLOY
Experience a safer and more open world

MARKAR EGT308 ADJUSTABLE EDGE GUARD WITH ASTRAGAL

Standard Features

Material
Heavy-duty 16 gauge stainless steel

Finishes
US32D Satin Stainless Steel (630)

Mounting Hardware
Fasteners concealed when door is closed
Included fasteners are:
Custom 12-24 x 11/16" S.S Phillips Flat Head Undercut TEK Screws
Custom 12-24 x 1 1/2" S.S. Phillips Flat Head Particle Board Screws
Order form required, available online.

Standard Sizes
6'8", 7'0" ,7'2", 8'0", 10'0"

Door Edge
Specify square or beveled edge when ordering (beveled edge standard)

Fire Rating
3 hours- hollow metal doors
90 minutes- hollow metal and composite
20 minutes- wood doors

Fire-rated label

MAY NOT APPLY TO ALL WOOD DOORS. PLEASE CONSULT FACTORY FOR SPECIFIC WOOD DOOR APPLICATIONS.

Optional Features

Finish
US32 Bright Stainless Steel (629)
Scratch-Resistant Powder Coated Paint

Hardware Cutouts
(Edge Guard order form must be filled out)
Flush bolts
ASA strike
Deadlock strike and latch
86 edge
Hospital latch
161 cutout

Fasteners
Tamper-proof security screws
Adjust-A-Screw™ for correcting frame fit problems up to 3/8"

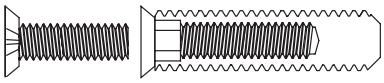

Other Features
Custom lengths - specify in inches
Staggered hole pattern for lead lined doors
Custom cutouts
Dutch door application - suffix "DDP"
Lead lined astragal with 4 lbs. lead lining – suffix "LL"

The integral overlapping astragal of the EGT308 provides additional security by protecting the latch protector. It is ideal for exterior pairs of doors or doors that require added protection from vandalism.

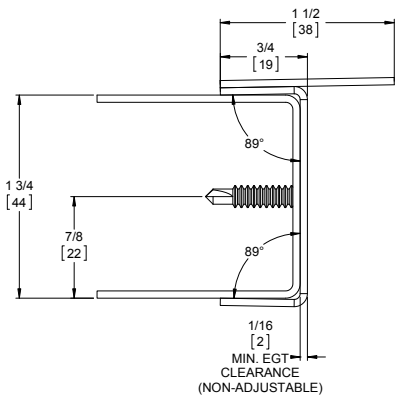

Square edge door

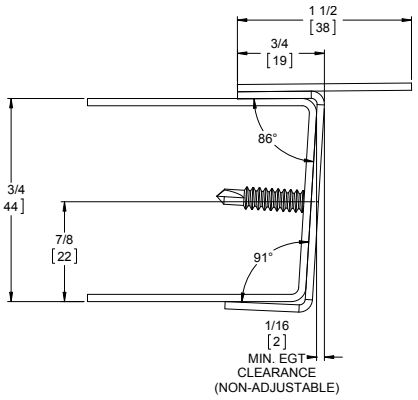

Bevel edge door

PEMKO
ASSA ABLOY
Experience a safer and more open world

800-824-3018 | www.pemko.com
Check the web site for the up-to-date catalog

Copyright © 2015-2025, ASSA ABLOY Accessories and Door Controls Group, Inc., an ASSA ABLOY Group company. All rights reserved. Reproduction in whole or in part without the express written permission of ASSA ABLOY Accessories and Door Controls Group, Inc. is prohibited.

MARKAR 200 SERIES CARBON STEEL PIN & BARREL CONTINUOUS HINGES

Short Form Architectural Specification:

Continuous hinges shall be full height piano-type hinge providing full height door support.

- Supports weights up to 300 lbs. 4'0" maximum door width
- Material to be 14 gauge 1012 carbon steel
- .187" diameter stainless steel pin (rod)
- Each knuckle 2", including nylon bearing at each separation for a quiet, smooth, self-lubricating operation
- Finish: Zinc Plated
  Optional Finish: Scratch-Resistant Powder Coated Paint
- All hinges shall be furnished with manufacturer's recommended hardware pack per specific model application
- Must use undercut head screws
- Must be able to carry Warnock Hersey Int. or UL fire rated doors and frames up to 3 hours
- Hinges shall meet ANSI/BHMA Standard A 156.26 Grade 1
- Symmetrically templated hole pattern

Note: 25-Year Warranty on all Continuous Hinges
Note: Fire label for doors and frames should be placed on the header and top rail of fire rated doors and frames

MARKAR FM200 EDGE MOUNT HINGE

Standard Features

Barrel Type Hinge
.187" diameter stainless steel pin (rod)
Medical bearings
Stainless steel end pins

Material
Heavy-duty 14 gauge 1012 carbon steel

Finishes
Zinc Plated

Standards
ANSI/BHMA Standard A156.26 Grade 1

Mounting Hardware
No exposed mounting fasteners
Custom 12-24 x $^{11}/_{16}$" S.S Phillips Flat Head Undercut TEK Screws

Capacity
Supports weights up to 300 lbs. 4'0" maximum door width

Standard Sizes
6'8", 7'0"

Handing
Handing not required on standard hinges. Specify handing when ordering a hinge with modification

Fire Rating
3 hours- hollow metal doors
90 minutes- hollow metal and composite core wood fire doors
20 minutes- wood doors

Classified in accordance with UL10C for positive pressure
Fire-rated label

Windstorm
Evaluated in accordance with TAS 201-14, TAS 202-14, TAS 203-14, ASTM E330, ASTM E1886, ASTM E1996 and ANSI A250.13

Optional Features

Finish
Scratch-Resistant Powder Coated Paint

Fasteners
Tamper-proof security screws

Other Features
Custom lengths - specify in inches
Custom hole pattern
Dutch door hinges - suffix "DDP"
Hospital tips - suffix "HT"
Raised barrel - suffix "RB"

Electrical Modifications
Adjustable Monitoring Switch - suffix "AMS"
Current Transfer Prep (frame leaf only) - suffix "CTP"
Electrical Transfer Access Prep - suffix "ETAP"

ElectroLynx®
EL4 (4 wire), EL8 (8 wire), EL12 (12 wire)

This edge-mounted pin & barrel hinge is used on many traffic, high abuse interior doors. The hinge works well in locations that used anchor hinges, pivot reinforced hinges, or thrust pivot unit and hinge sets. This hinge saves on special door and frame preparation charges. It can be used on both fire labeled and non-labeled openings.

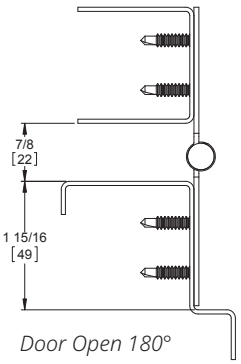

Door Open 180°

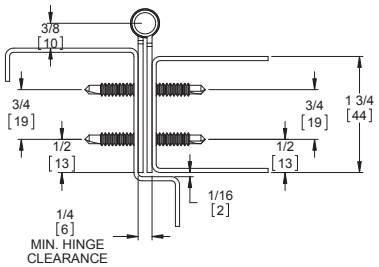

Door Closed

800-824-3018 | www.pemko.com
Check the web site for the up-to-date catalog

Copyright © 2015-2025, ASSA ABLOY Accessories and Door Controls Group, Inc., an ASSA ABLOY Group company. All rights reserved.
Reproduction in whole or in part without the express written permission of ASSA ABLOY Accessories and Door Controls Group, Inc. is prohibited.

PEMKO
ASSA ABLOY
Experience a safer and more open world

MARKAR HS203 HALF SURFACE

Standard Features

Barrel Type Hinge
.187" diameter stainless steel pin (rod)
Medical bearings
Stainless steel end pins

Material
Heavy-duty 14 gauge 1012 carbon steel
Cover - extruded aluminum

Finishes
Zinc Plated
Cover - Mill Finish

Standards
ANSI/BHMA Standard A156.26 Grade 1
ANSI/BHMA A156.18 for Materials and finishes

Mounting Hardware
No exposed mounting fasteners
Custom 12-24 x 11/16" S.S Phillips Flat Head Undercut TEK Screws
1/4-14 x 3/4 Security TORX TEK Screws

Capacity
Supports weights up to 300 lbs.
4'0" maximum door width

Standard Sizes
6'8", 7'0" ,7'2", 8'0", 10'0"

Hole Pattern
Symmetrically templated

Handing
Not required for standard 7'0", 8'0" or 10'0". Specify handing for 6'8" and 7'2" and for most optional features

Fire Rating
3 hours- hollow metal doors
90 minutes- hollow metal and composite
20 minutes- wood doors

Classified in accordance with UL10C for positive pressure

Fire-rated label

Optional Features

Finishes
Scratch-Resistant Powder Coated Paint

Fasteners
1 5/8" steel sleeve bolts
Tamper-proof security screws

Other Features
Custom lengths - specify in inches
Custom hole pattern
Dutch door hinges - suffix "DDP"
Hospital tips - suffix "HT"
Raised barrel - suffix "RB"
Lead-lined cover with 4 lbs. lead lining - suffix "LL"

Electrical Modifications
Current Transfer Prep (frame leaf only) - suffix "CTP"

This half-surface pin & barrel continuous hinge can be used to repair and replace existing hinges on both fire-labeled and non-labeled openings. The hinge fits into the gap left after standard butt hinges are removed. It can assist in reversing the handing of a door, or to reverse the swing of a door hung in an evenly-rabbetted frame. (Please contact the factory for instructions for unevenly-rabbetted frames.)

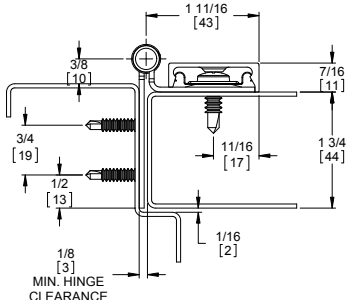

Door Closed

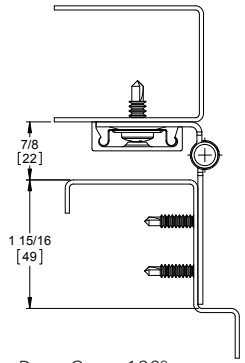

Door Open 180°

PEMKO
ASSA ABLOY

Experience a safer and more open world

800-824-3018 | www.pemko.com
Check the web site for the up-to-date catalog

Copyright © 2015-2025, ASSA ABLOY Accessories and Door Controls Group, Inc., an ASSA ABLOY Group company. All rights reserved. Reproduction in whole or in part without the express written permission of ASSA ABLOY Accessories and Door Controls Group, Inc. is prohibited.

MARKAR 100 SERIES ALUMINUM PIN & BARREL CONTINUOUS HINGES

Short Form Architectural Specification:

Continuous hinges shall be full height piano-type hinge providing full height door support.

- Supports weights up to 600 lbs. 4'0" maximum door width
- Material to be extruded aluminum 6063-T6 alloy
- .187" diameter stainless pin (rod)
- Each knuckle 2", including nylon bearing at each separation for a quiet, smooth, self-lubricating operation
- Finish: Clear Anodized (628), Dark Bronze Anodized (313) Optional Finish: Light Bronze Anodized (311), Black Anodized (315), Scratch-Resistant Powder Coated Paint. Other finishes available upon request.
- All hinges shall be furnished with manufacturer's recommended hardware pack per specific model application
- Exterior barrel diameter .515" (1/2")
- Material thickness less than .125"
- Material weight will be no less than 1.5 lbs. per foot
- Hinges shall meet ANSI/BHMA Standard A 156.26 Grade 2
- Symmetrically templated hole pattern

Note: 25-Year Warranty on all Continuous Pin & Barrel Hinges

MARKAR FM100 EDGE MOUNT HINGE

Standard Features

Barrel Type Hinge
.187" diameter stainless steel pin (rod)
Medical bearings
Aluminum end pins

Material
6063-T6 aluminum alloy

Finishes
Clear Anodized (628)
Dark Bronze Anodized (313)

Standards
ANSI/BHMA Standard A156.26 Grade 2
ANSI/BHMA A156.18 for Materials and finishes

Mounting Hardware
Fasteners concealed when door is closed
Custom 12-24 x 11/16" S.S Phillips Flat Head Undercut TEK Screws

Capacity
Supports weights up to 600 lbs.
4'0" maximum door width

Standard Sizes
6'8", 7'0", 7'2", 8'0"

Hole Pattern
Symmetrically templated

Handing
Handing not required on standard hinges. Specify handing when ordering a hinge with modification

Windstorm
Evaluated in accordance with TAS 201-14, TAS 202-14, TAS 203-14, ASTM E330, ASTM E1886, ASTM E1996 and ANSI A250.13.

Optional Features

Finishes
Light Bronze Anodized (311)
Black Anodized (315)
Scratch-Resistant Powder Coated Paint

Other Features
Custom lengths - specify in inches
Custom hole pattern
Dutch door hinges - suffix "DDP"
Hospital tips - suffix "HT"

Electrical Modifications
Current Transfer Prep - suffix "CTP"
Electrical Transfer Access Prep - suffix "ETAP"

ElectroLynx®
EL4 (4 wire), EL8 (8 wire), EL12 (12 wire)

This door-edge mounted aluminum pin & barrel type hinge is extruded using 30% more aluminum than most geared hinges, giving it exceptional strength and durability. This product is specified in lieu of pivots or butt hinges due to its unique design which distributes the weight of the door down the entire length of the hinge.

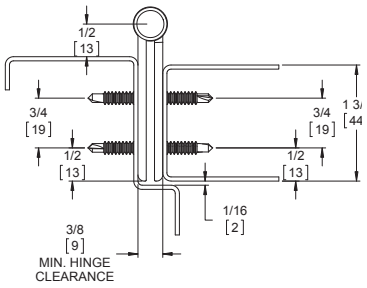

Door Closed

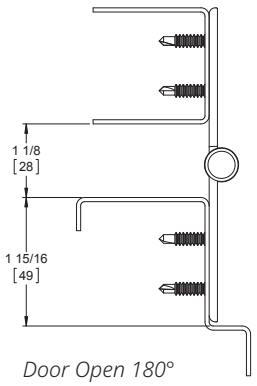

Door Open 180°

PEMKO
ASSA ABLOY
Experience a safer and more open world

Copyright © 2015-2025, ASSA ABLOY Accessories and Door Controls Group, Inc., an ASSA ABLOY Group company. All rights reserved.
Reproduction in whole or in part without the express written permission of ASSA ABLOY Accessories and Door Controls Group, Inc. is prohibited.

MARKAR FS102 FULL SURFACE FLUSH MOUNT HINGE

Standard Features

Barrel Type Hinge
.187" diameter stainless steel pin (rod)
Medical bearings
Aluminum end pins

Material
6063-T6 aluminum alloy

Finishes
Clear Anodized (628)
Dark Bronze Anodized (313)

Standards
ANSI/BHMA Standard A156.26 Grade 2
ANSI/BHMA A156.18 for Materials and finishes

Mounting Hardware
Fasteners concealed when door is closed
1/4-14 x 3/4" Security TORX TEK Screws

Capacity
Supports weights up to 600 lbs.
4'0" maximum door width

Standard Sizes
6'8", 7'0", 7'2", 8'0"

Locking Security Covers
Brushed aluminum finish

Handing
Not required for standard 7'0" or 8'0".
Handing required for 6'8" and 7'0" and for most optional features listed

Optional Features

Finish
Light Bronze Anodized (311)
Black Anodized (315)
Scratch-Resistant Powder Coated Paint

Fasteners
1 5/8" aluminum sleeve bolts
Tamper-proof security screws

Other Features
Custom lengths - specify in inches
Custom hole pattern
Dutch door hinges - suffix "DDP"
Hospital tips - suffix "HT"
Lead lined cover with 4 lbs. lead lining - suffix "LL"

For flush-mounted doors. This surface-mounted pin & barrel type continuous hinge is for flush-mounted doors for solving your door sag problems. This unit works well on all types of aluminum, wood and hollow metal door applications. The hinge also features tamper-resistant cover caps to prevent vandalism or break-ins.

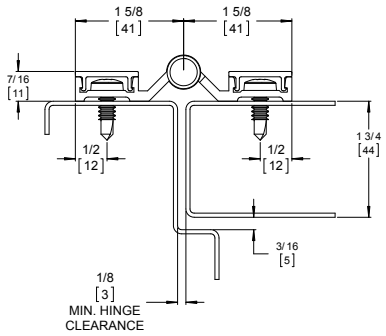

Door Closed

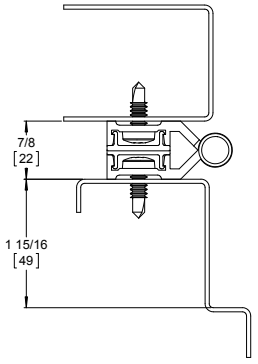

Door Open 180°

PEMKO
ASSA ABLOY
Experience a safer and more open world

800-824-3018 | www.pemko.com
Check the web site for the up-to-date catalog

Copyright © 2015-2025, ASSA ABLOY Accessories and Door Controls Group, Inc., an ASSA ABLOY Group company. All rights reserved. Reproduction in whole or in part without the express written permission of ASSA ABLOY Accessories and Door Controls Group, Inc. is prohibited.

MARKAR 900 SERIES SPRING LOADED PIN & BARREL TYPE CONTINUOUS STAINLESS STEEL HINGES

Short Form Architectural Specification:

Continuous hinges shall be full height piano-type hinge providing full height door support.

- Supports weights up to 80 lbs. 3'0" maximum door width
- Material to be 14 gauge stainless steel
- Patented .25" diameter 303 stainless steel self closing pin assembly
- Exterior barrel diameter .438" ($^{7}/_{16}$")
- Adjustable, tamper resistant Torx Head end caps
- Each knuckle 2", including split nylon bearing at each separation for a quiet, smooth, self-lubricating operation
- Finish: US32D Satin Stainless Steel (630)
  Optional Finish: US32 Bright Stainless Steel (629)
- Non-Handed
- All hinges shall be furnished with manufacturer's recommended hardware pack per specific model application
- Removable roll pin for spring loaded adjustment
- Symmetrically templated hole pattern

Note: 10-Year Warranty

MARKAR FM900 EDGE MOUNT

Standard Features

Spring-Loaded Barrel Type Hinge
.25" diameter stainless steel pin with stainless steel spring mechanism
Torx tip cap to adjust spring tension
Split nylon bearings

Material
Heavy-duty 14 gauge stainless steel

Finishes
US32D Satin Stainless Steel (630)
Torx Adjusting Screw
Adjust tension on door to close tightly for out-swinging ADA compliance

Mounting Hardware
Custom 12-24 x $^{11}/_{16}$" S.S Phillips Flat Head Undercut TEK Screws

Capacity
Close door weighing up to 80 lbs.

Standards
ANSI/BHMA A156.18 for Materials and finishes

Sizes
54", 57"

Non-Handed
Use the same hinge for right- or left-handed doors

For Doors over 3'0" consult factory

USA patent no. 4823437
Canadian patent no. 1303804

Optional Features

Finishes
US32 Bright Stainless Steel (629)
Scratch-Resistant Powder Coated Paint

Fasteners
Tamper-proof security screws

Other Features
Custom lengths -Custom sizes 24" to 72" available
Custom hole pattern

Ideal for damp or corrosive environments, Markar's stainless steel toilet partition hinge adds years of life to your high-quality partition.

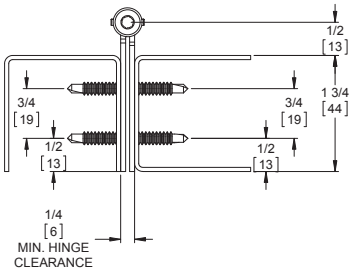

Door Closed

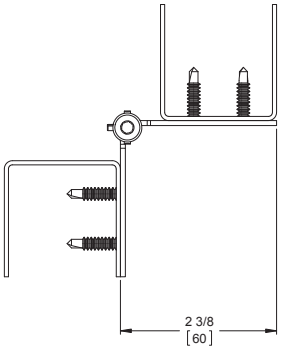

Door Open 90°

Copyright © 2015-2025, ASSA ABLOY Accessories and Door Controls Group, Inc., an ASSA ABLOY Group company. All rights reserved.
Reproduction in whole or in part without the express written permission of ASSA ABLOY Accessories and Door Controls Group, Inc. is prohibited.

PEMKO
ASSA ABLOY
Experience a safer and more open world

MARKAR FS902 FLUSH FULL SURFACE HINGE

Standard Features

Spring-Loaded Barrel Type Hinge
.25" diameter stainless steel pin with stainless steel spring mechanism
Torx tip cap to adjust spring tension
Split nylon bearings

Material
Heavy-duty 14 gauge stainless steel
Covers - extruded aluminum

Standards
ANSI/BHMA A156.18 for Materials and finishes

Finishes
US32D Satin Stainless Steel (630)
Covers - Brushed Aluminum

Torx Adjusting Screw
Adjust tension on door to close tightly for out-swinging ADA compliance

Mounting Hardware
1/4" x 20 pan head pan head machine screws
Concealed by cover caps

Capacity
Close door weighing up to 80 lbs.

Sizes
54", 57"

Non-Handed
Use the same hinge for right- or left-handed doors

For Doors over 3'0" consult factory

USA patent no. 4823437
Canadian patent no. 1303804

Optional Features

Finishes
US32 Bright Stainless Steel (629)
Scratch-Resistant Powder Coated Paint

Fasteners
Tamper-proof security screws

Ideal for damp or corrosive environments, Markar's stainless steel toilet partition hinge adds years of life to your high-quality partition.

Other Features
Custom lengths - Custom sizes 24" to 72" available
Custom hole pattern

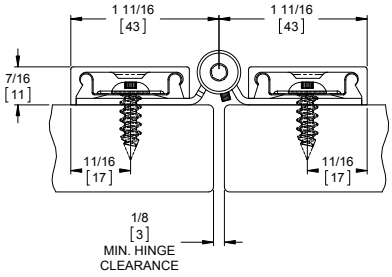

Door Closed

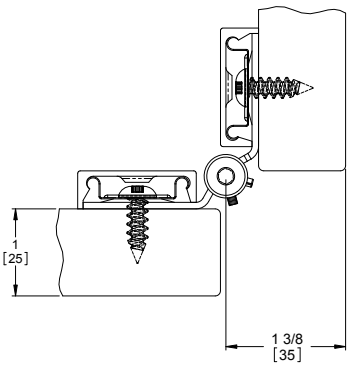

Door Open 90°

MARKAR FS910 FLUSH FULL SURFACE HINGE

Standard Features

Spring-Loaded Barrel Type Hinge
.25" diameter stainless steel pin with stainless steel spring mechanism Torx tip cap to adjust spring tension Split nylon bearings

Material
Heavy-duty 14 gauge
stainless steel

Standards
ANSI/BHMA A156.18 for Materials and finishes

Finishes
US32D Satin Stainless Steel (630)
Torx Adjusting Screw
Adjust tension on door to close tightly for out-swinging ADA compliance

Mounting Hardware
Custom 12-24 x 11/16" S.S Phillips Flat Head Undercut TEK Screws

Capacity
Close door weighing up to 80 lbs.

Sizes
54", 57"

Non-Handed
Use the same hinge for right- or left-handed doors

For Doors over 3'0" consult factory

USA patent no. 4823437

Canadian patent no. 1303804

Optional Features

Finishes
US32 Bright Stainless Steel (629)
Scratch-Resistant Powder Coated Paint

Fasteners
Tamper-proof security screws

Other Features
Custom lengths -Custom sizes 24" to 72" available Custom hole pattern

Ideal for damp or corrosive environments, Markar's stainless steel toilet partition hinge adds years of life to your high-quality partition.

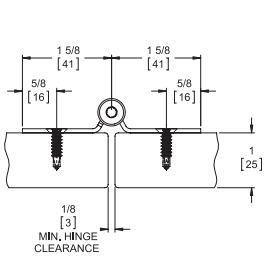

Door Open

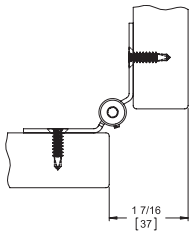

Door Open

PEMKO
ASSA ABLOY
Experience a safer and more open world

800-824-3018 | www.pemko.com
Check the web site for the up-to-date catalog

Copyright © 2015-2025, ASSA ABLOY Accessories and Door Controls Group, Inc., an ASSA ABLOY Group company. All rights reserved. Reproduction in whole or in part without the express written permission of ASSA ABLOY Accessories and Door Controls Group, Inc. is prohibited.

MARKAR 400 SERIES SPRING LOADED PIN & BARREL TYPE CONTINUOUS ALUMINUM HINGES

Short Form Architectural Specification:

Continuous hinges shall be full height piano-type hinge providing full height door support.

- Supports weights up to 80 lbs. 3'0" maximum width
- Material to be extruded aluminum 6063-T6 alloy
- Patented .25" diameter 303 stainless steel self closing pin assembly
- Each knuckle 2", including split nylon bearing at each separation for a quiet, smooth, self-lubricating operation
- Finish: Clear Anodized (628). Other finishes available upon request.
- Adjustable, tamper resistant Torx Head end caps
- Non-handed
- Exterior barrel diameter .515" (1/2")
- Material thickness less than .125"
- Removable roll pin for spring loaded adjustment
- Symmetrically templated hole pattern

Note: 10-Year Warranty

MARKAR FM400 EDGE MOUNT HINGE

Standard Features

Spring-Loaded Barrel Type Hinge
.25" diameter stainless steel pin with stainless steel spring mechanism
Torx tip cap to adjust spring tension
Split nylon bearings

Material
6063-T6 aluminum alloy

Standards
ANSI/BHMA A156.18 for Materials and finishes

Finishes
Clear Anodized (628)
Torx Adjusting Screw
Adjust tension on door to close tightly for out-swinging ADA compliance

Mounting Hardware
Custom 12-24 x 11/16" S.S Phillips Flat Head Undercut TEK Screws

Capacity
Close door weighing up to 80 lbs.

Sizes
54", 57"

Non-Handed
Use the same hinge for right- or left-handed doors

For Doors over 3'0" consult factory

USA patent no. 4823437
Canadian patent no. 1303804

Optional Features

Fasteners
Tamper-proof security screws

Finishes
Scratch-Resistant Powder Coated Paint
Light Bronze Anodized (311)
Black Anodized (315)

Other Features
Custom lengths - Custom sizes 24" to 72" available
Custom hole pattern
Lift-up safety feature

Specify Markar to create the total finished look that your high-quality toilet partition deserves. The Markar continuous spring hinge gives a clean, finished look while virtually eliminating the "sight line" that multi-part systems cause. Continuous hinges also give complete support along the entire length of the partition door.

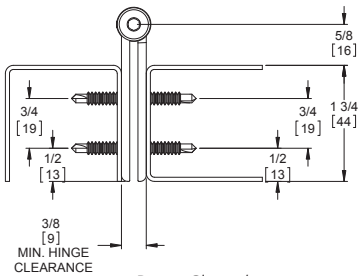

Door Closed

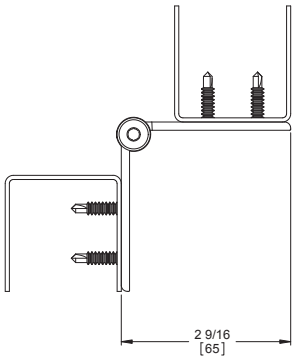

Door Open 90°

Copyright © 2015-2025, ASSA ABLOY Accessories and Door Controls Group, Inc., an ASSA ABLOY Group company. All rights reserved.
Reproduction in whole or in part without the express written permission of ASSA ABLOY Accessories and Door Controls Group, Inc. is prohibited.

PEMKO
ASSA ABLOY
Experience a safer and more open world

MARKAR FS402 FLUSH FULL SURFACE HINGE

Standard Features

Spring-Loaded Barrel Type Hinge
.25" diameter stainless steel pin with stainless steel spring mechanism
Torx tip cap to adjust spring tension
Split nylon bearings

Material
6063-T6 aluminum alloy
Covers - extruded aluminum

Standards
ANSI/BHMA A156.18 for Materials and finishes

Finishes
Clear Anodized (628)
Torx Adjusting Screw
Adjust tension on door to close tightly for out-swinging ADA compliance

Mounting Hardware
$^{1}/_{4}$" x 20 pan head pan head machine screws
Concealed by cover caps

Capacity
Close door weighing up to 80 lbs.

Sizes
54", 57"

Non-Handed
Use the same hinge for right- or left-handed doors

For Doors over 3'0" consult factory

USA patent no. 4823437
Canadian patent no. 1303804

Optional Features

Fasteners
Tamper-proof security screws

Finishes
Scratch-Resistant Powder Coated Paint
Light Bronze Anodized (311)
Black Anodized (315)

Other Features
Custom lengths - Custom sizes 24" to 72" available
Custom hole pattern
Lift-up safety feature

Specify Markar to create the total finished look that your high-quality toilet partition deserves. The Markar continuous spring hinge gives a clean, finished look while virtually eliminating the "sight line" that multi-part systems cause. Continuous hinges also give complete support along the entire length of the partition door.

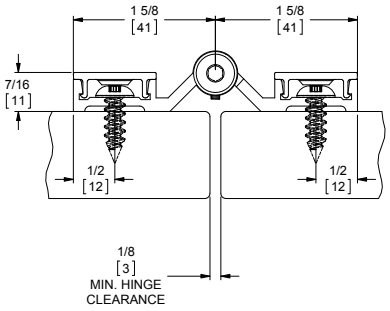

Door Closed

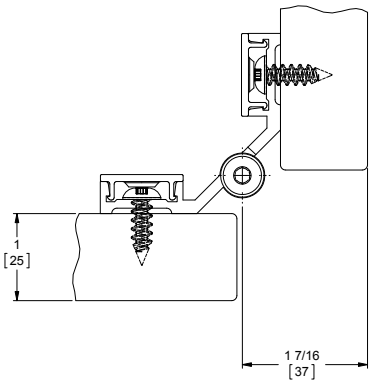

Door Open 90°

PEMKO
ASSA ABLOY
Experience a safer and more open world

800-824-3018 | www.pemko.com
Check the web site for the up-to-date catalog

Copyright © 2015-2025, ASSA ABLOY Accessories and Door Controls Group, Inc., an ASSA ABLOY Group company. All rights reserved. Reproduction in whole or in part without the express written permission of ASSA ABLOY Accessories and Door Controls Group, Inc. is prohibited.

MARKAR B1923 FULL SURFACE REINFORCING PIVOT

This full-surface reinforcing pivot adds years of life to openings where the hinges or hinge reinforcements have failed. An economical way to solve door sag problems, reinforcing pivots take the load off the top hinge and transfer it to screws that will not pull out.

Material:

Heavy Duty 3/16" (.187) Cold-Rolled Steel

Standards:

ANSI/BHMA A156.18 for Materials and finishes

Finish:

Zinc Plated (US2G)

Mounting:

8 ea. 1/4-20 x 3/4" Phillips flat head machine screws
8 ea. #14 x 1 1/4" Phillips flat head sheet metal screws
2 ea. 1/4-20 x 1 3/4" Sleeve bolts

Capacity:

Supports Weights up to 300 lbs.

Hole Pattern:

Symmetrically

Handing:

Non-handed

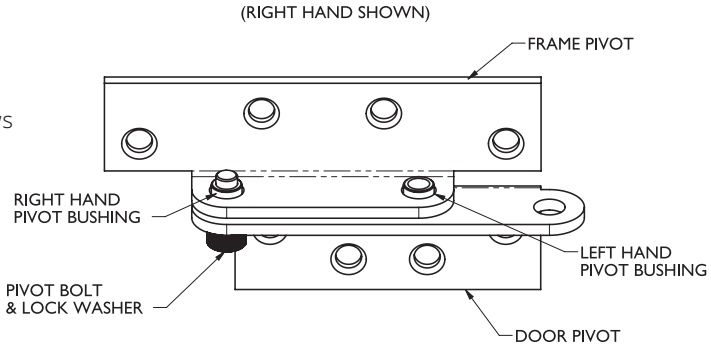

B1923
Side View

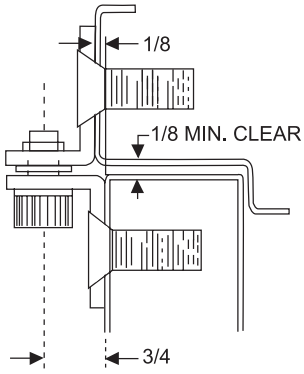

Matches 4 1/2" hinge barrel centerline

B1923	The B1923 pivot is designed with a 3/4" offset to match the pivot point of a 4 1/2" wide butt hinge.

Copyright © 2015-2025, ASSA ABLOY Accessories and Door Controls Group, Inc., an ASSA ABLOY Group company. All rights reserved.
Reproduction in whole or in part without the express written permission of ASSA ABLOY Accessories and Door Controls Group, Inc. is prohibited.

PEMKO
ASSA ABLOY
Experience a safer and more open world

MARKAR FLAT ASTRAGALS

- For 6'8", 7'0", and 8'0" doors
- Holes are countersunk and equally spaced
- 1/8" x 2" galvannealed steel
- 1-pkg. # 6 x 1" F.H.S.M. screws
- Finish – galvannealed steel
- Available with thru-bolt option– nine-pack (ZTB-KIT9) or eleven-pack (ZTB-KIT11)

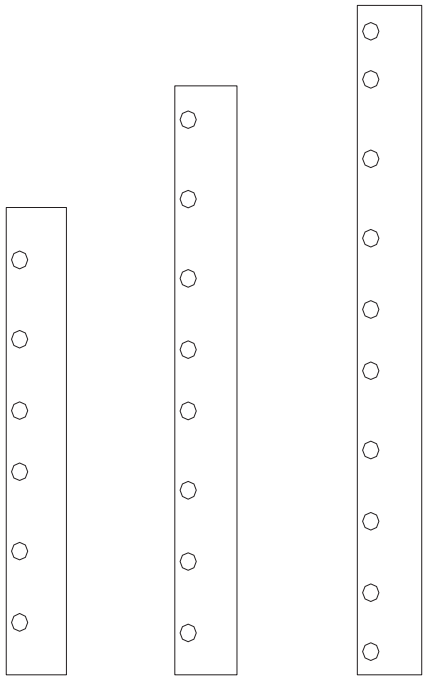

FA68 FA70 FA80

800-824-3018 | www.pemko.com
Check the web site for the up-to-date catalog

Copyright © 2015-2025, ASSA ABLOY Accessories and Door Controls Group, Inc., an ASSA ABLOY Group company. All rights reserved. Reproduction in whole or in part without the express written permission of ASSA ABLOY Accessories and Door Controls Group, Inc. is prohibited.

MARKAR UNIVERSAL SCREW PACKS – EDGE MOUNT HINGES

For hinge models FM100

Screw type	Aluminum	Bronze	6'8"-7'0"-7'2"	8'0"	10'0"
12-24 x 11/16" Phillips flat head undercut self-drilling Tek screw	TKS1267SP10SS	TKS1267SP10BLR	42	46	54

For hinge models FM200, FM300, HG311, HG315, HG329, FM600

Screw type	Stainless Steel	6'8"-7'0"-7'2"	8'0"	10'0"
12-24 x 11/16" Phillips flat head undercut self-drilling Tek screw	TKS1267SP10SS	42	46	54

For hinge/guard models HG305, HG310, HG326,

Screw type	Stainless Steel	6'8"-7'0"-7'2"	8'0"	10'0"
12-24 x 11/16" Phillips flat head undercut self-drilling Tek screw	TKS1267SP10SS	42	46	54
Adjust-A-Screw™ option	**Stainless Steel**	**6'8"-7'0"-7'2"**	**8'0"**	**10'0"**
10-32 x 3/4" Phillips flat head undercut machine screw	MS10075SS	21	23	27
1 3/8" Adjust-A-Screw™ with 10-32 internal thread	M26-0031-01	21	23	27

For hinge/guard model HG323

Screw type	Stainless Steel	6'8"-7'0"-7'2"	8'0"	10'0"
12-24 x 11/16" Phillips flat head undercut self-drilling Tek screw	TKS1267SP10SS	21	23	27
1/4-20 X 3/4" Truss Head Phillips machine screw	MS14075TSS	9	9	11
1/4-20 x 1 5/8" sleeve bolt	TB1420SS	9	9	11

For edge/guard models EG308, EGC308, & EGT308

Screw type	Stainless Steel	6'8"-7'0"-7'2"	8'0"	10'0"
#12 x 1 1/2 Phillips flat head undercut sheet metal screw	PBS12150SP10SS	8	10	12
#12-24 x 11/16" Phillips flat head undercut self-drilling Tek Screw	TKS1267SP10SS	8	10	12

For security hinge models FM3500, FS3501, & FS3502

Screw type	Stainless Steel	6'8"-7'0"-7'2"	8'0"	10'0"
12-24 x 7/16" flat head undercut machine screw	MS1244SP10SS	42	46	54

Copyright © 2015-2025, ASSA ABLOY Accessories and Door Controls Group, Inc., an ASSA ABLOY Group company. All rights reserved.
Reproduction in whole or in part without the express written permission of ASSA ABLOY Accessories and Door Controls Group, Inc. is prohibited.

MARKAR UNIVERSAL SCREW PACKS – FULL SURFACE HINGES

For models FS102

Screw type	Aluminum	Bronze	6'8"-7'0"-7'2"	8'0"	10'0"
1/4-14 x 3/4 Torx pan head self-drilling Tek screw	TORX-TKS14075R	TORX-TKS14075R	32	36	40
#8 x 3/4" Phillips flat head Tek screw	TKS8075Z	S323-08R12-663	4	4	4

For models FS301 & FS302

Screw type	Stainless Steel	6'8"-7'0"-7'2"	8'0"	10'0"
1/4-14 x 3/4" Torx pan head self-drilling Tek screw	TORX-TKS14075R	32	36	40
606 Cover clips	M22-0130-01	10	12	16
#8 x 3/4" Phillips flat head Tek screw	TKS8075Z	4	4	4

For swing clear model FS/SC309

Screw type	Stainless Steel	6'8"-7'0"-7'2"	8'0"	10'0"
12-24 x 11/16" Phillips flat head undercut self-drilling Tek screw	TKS1267SP10SS	22	24	28
1/4-14 x 3/4" Torx Phillips pan head self-drilling Tek screw	TORX-TKS14075R	16	18	20
606 Cover clips	M22-0130-01	5	6	8
#8 x 3/4" Phillips flat head Tek screw	TKS8075Z	2	2	2

UNIVERSAL SCREW PACKS – HALF SURFACE & HALF MORTISE HINGES

For hinge models HS203

Screw type	Stainless Steel	6'8"-7'0"-7'2"	8'0"	10'0"
1/4-14 x 3/4" Torx pan head self-drilling Tek screw	TORX-TKS14075R	14	16	20
12-24 x 11/16" Phillips flat head undercut self-drilling Tek screw	TKS1267SP10SS	21	23	27
606 Cover clips	M22-0130-01	5	6	8
#8 x 3/4" Phillips flat head sheet metal screw	TKS8075Z	2	2	2

For hinge models HS303 & HM304

Screw type	Stainless Steel	6'8"-7'0"-7'2"	8'0"	10'0"
1/4-14 x 3/4" Torx pan head self-drilling Tek screw	TORX-TKS14075R	14	16	20
12-24 x 3/16" Phillips flat head undercut self-drilling Tek screw	TKS1267SP10SS	21	23	27
606 Cover clips	M22-0130-01	5	6	8
#8 x 3/4" Phillips flat head sheet metal screw	TKS8075Z	2	2	2

Copyright © 2015-2025, ASSA ABLOY Accessories and Door Controls Group, Inc., an ASSA ABLOY Group company. All rights reserved. Reproduction in whole or in part without the express written permission of ASSA ABLOY Accessories and Door Controls Group, Inc. is prohibited.

MARKAR UNIVERSAL SCREW PACKS – TOILET PARTITION HINGES

For hinge models FM400

Screw type	Stainless Steel	54"	57"
12-24 x 11/16" Phillips flat head undercut zinc self-drilling Tek screw	TKS1267SP10SS	26	26
3/32" x 3/8" Stainless Steel roll pin	RLPN33238SS	1	1

For hinge model FS402

Screw type	Stainless Steel	54"	57"
1/4-14 x 3/4" Torx button head sheet metal screw	TORX-TKS14075R	12	12
#8 x 3/4" TORX flat head self-drilling Tek screw	TORX-TKS8075Z	4	4
3/32" x 3/8" Stainless Steel roll pin	RLPN33238SS	1	1

For hinge models FM900

Screw type	Stainless Steel	54"	57"
#12-24 x 11/16" Phillips flat head undercut self-drilling Tek screw	TKS1267SP10SS	26	26
3/32" x 3/8" Stainless Steel roll pin	RLPN33238SS	1	1

For hinge model FS902

Screw type	Stainless Steel	54"	57"
1/4-14 x 3/4" Torx button head sheet metal screw	TORX-TKS14075R	12	12
606 Cover clips	M22-0130-01	6	6
#8 x 3/4" TORX flat head self-drilling Tek screw	TORX-TKS8075Z	4	4
3/32" x 3/8" Stainless Steel roll pin	RLPN33238SS	1	1

For hinge models FS910

Screw type	Stainless Steel	54"	57"
#12-24 x 11/16" Phillips flat head undercut self-drilling Tek screw	TKS1267SP10SS	26	26
3/32" x 3/8" Stainless Steel roll pin	RLPN33238SS	1	1

Copyright © 2015-2025, ASSA ABLOY Accessories and Door Controls Group, Inc., an ASSA ABLOY Group company. All rights reserved.
Reproduction in whole or in part without the express written permission of ASSA ABLOY Accessories and Door Controls Group, Inc. is prohibited.

MARKAR FASTENERS

	Product Number	Description	Properties
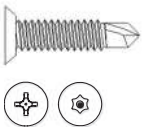		Custom 12-24 x 11/16" Phillips Flat Head Undercut Self-Drilling Screw	
	TKS1267SP10SS	For attaching Edge Mounted hinge leaves	Stainless Steel Phillips
	TORX-TKS1267SP10SS	For attaching Edge Mounted hinge leaves	Stainless Steel Torx
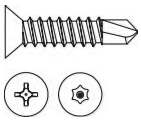		#8 x 3/4" Flat Head Self Drilling Tek Screw	
	TKS8075Z	For attaching 100, 200, and 300 series covers	Zinc Phillips
	S323-08R12-663	For attaching 100, 200, and 300 series covers	Bronze Phillips
	TORX-TKS8075Z	For attaching 100, 200, and 300 series covers	Zinc Torx
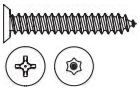		Custom #12 x 1 1/2" Flat Head Undercut Particle Board Screw	
	PBS12150SP10BLR	For edge mounting to wood	Bronze Phillips
	PBS12150SP10SS	For edge mounting to wood	Stainless Steel Phillips
	TORX-PBS12150SP10SS	For edge mounting to wood	Stainless Steel Torx
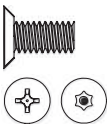		Custom 12-24 x 7/16" Flat Head Undercut Machine Screw	
	MS1244SP10SS	Used with 3500 series hinges for mounting to metal	Stainless Steel Phillips
	TORX-MS1244SP10SS	Used with 3500 series hinges for mounting to metal	Stainless Steel Torx
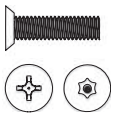		10-32 x 3/4" Flat Head Machine Screw	
	MS10075SS	Used with Adjust-A-Screw	Stainless Steel Phillips
	TORX-MS10075SS	Used with Adjust-A-Screw	Stainless Steel Torx
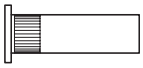		1/4-20 x 1 5/8" Sleeve Bolt	
	TB1420SS	For surface mounting to wood	Stainless Steel
		10-24 Security Button Head Barrel Nut	
	M26-0030	For surface mount toilet partition hinges Consult factory for pricing and availability	Stainless Steel
		10-24 x 3/4" Button Head Security Torx	
	TORX-BHMS1075SS	For surface mount toilet partition hinges Consult factory for pricing and availability	Stainless Steel

800-824-3018 | www.pemko.com
Check the web site for the up-to-date catalog

Copyright © 2015-2025, ASSA ABLOY Accessories and Door Controls Group, Inc., an ASSA ABLOY Group company. All rights reserved.
Reproduction in whole or in part without the express written permission of ASSA ABLOY Accessories and Door Controls Group, Inc. is prohibited.

MARKAR FASTENERS

	Product Number	Description	Properties
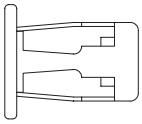	M26-0015-02	18 SJN 1/4-20 Molly Jack Nut 7/16" hole	Zinc
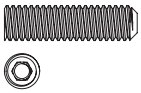	M26-0031-01	1 3/8" Adjust-A-Screw™ with 10-32 Internal Thread and Hex Head Adjustment Used with MS10075SS screw Note: 5/16" pilot hole required for 3/8" - 16 tap	
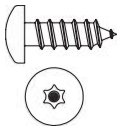	TORX-TKS14075R	1/4-14 x 3/4" T-27 Torx Button Head Sheet Metal Screw	Ruspert Coat Torx
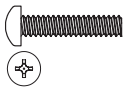	S222-416R16-603	1/4-20 x 1" Pan Head Machine Screw For surface mounting to metal	Zinc Phillips
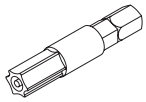	TORXBIT20 TORXBIT27	MT-T20, 27, & 15 Torx Driver Bit Used on TORX-MS1244SP10SS, TORX-PBS12150SP10SS and TORX-MS10075SS Used on TORX-TKS14075R16 and to adjust 400 and 900 series spring-loaded hinges	
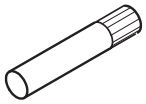	RLPN33238SS	Knurl Pin Replacement pin for spring-loaded toilet partition hinges	

Copyright © 2015-2025, ASSA ABLOY Accessories and Door Controls Group, Inc., an ASSA ABLOY Group company. All rights reserved.
Reproduction in whole or in part without the express written permission of ASSA ABLOY Accessories and Door Controls Group, Inc. is prohibited.

CUTTING PIN & BARREL HINGES TO CUSTOM LENGTHS

Step 1 The following instructions will apply to all Markar pin and barrel hinges except for toilet partition hinges. The general instructions apply for the 100, 200, 300 and 3500 series hinges. Follow option **A** for specific directions related to 100 series aluminum hinges and option **B** or **C** for specific directions related to 200, 300 & 3500 series steel and stainless steel hinges.

Step 2 Determine the amount the hinge needs to be shortened. Note the hand of the hinge before beginning to lay our your cut. All cuts should be done at the bottom of your hinge assembly so that the gang hole pattern is at the top.

Step 3 Measure from the top of the hinge down and mark a cut line at the desired length.
For 200, 300 & 3500 series hinges, follow the instructions below

- If less than 3/4" of knuckle is remaining follow option **B**
- If 3/4" or more of knuckle is remaining follow option **C**

Step 4 Cut the hinge to length with a hacksaw or horizontal band saw, going through each hinge leaf, barrel and rod. If necessary, use a file to remove shart edges and deburr.

Step 5 Slide the stainless steel rod out approximately 1" making sure the assembly stays together as one unit.

- **A B** Remove 1/4" from the rod using hacksaw and then push back into it's original position.
- **C** Remove 3/4" from the rod using a hacksaw and then push back into it's original position.

Step 6 Follow instructions below based on option used.

- **A** Using a hammer and a center-punch, swage the aluminum material towards the center of the hole locking the hinge pin into place making sure it will not slide out.
- **B** Using a pair of vice-grips, crimp the end of the steel barrel making sure the hinge pin will not slide out.
- **C** Remove the end of the pin from the scrap hinge and insert it into the bottom of hinge using hammer.

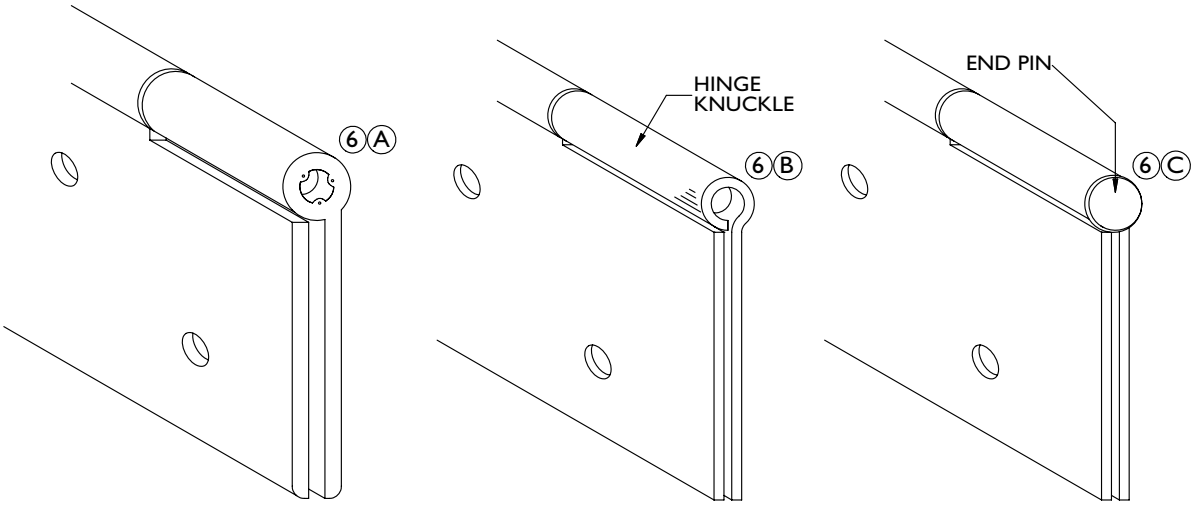

PEMKO
ASSA ABLOY
Experience a safer and more open world

Copyright © 2015-2025, ASSA ABLOY Accessories and Door Controls Group, Inc., an ASSA ABLOY Group company. All rights reserved. Reproduction in whole or in part without the express written permission of ASSA ABLOY Accessories and Door Controls Group, Inc. is prohibited.

PemkoHinge®

Continuous Geared Aluminum Hinges



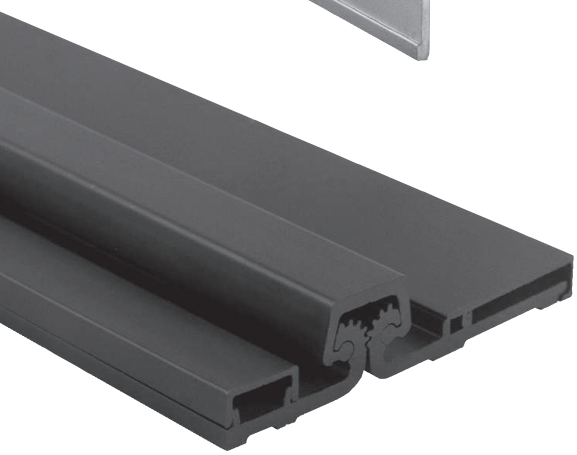



CONTENTS:

What is PemkoHinge®? 68
Ordering Chart 68
BHMA Certification Program 69
Hospital Tip 69
Cycle Requirements and Weight Bearing 69
UL Fire Labeling 69
Options for Electrically Modified Continuous Geared Hinges 70
X-Series PemkoHinge® 71
Offset Hinges 72
Full Mortise Hinges 73
Special Full Mortise Hinges 74
Kawneer Full Mortise Hinges 75
Raised Gear Hinge 75
Full Mortise Safety Hinges 76
Wide Throw Full Mortise Hinges 77
Wide Throw Half Surface Hinges 77
Half Surface Hinges 78
Half Mortise Hinges 78
Full Surface Hinges 79
Full Surface Center Pivot Hinges 79
Full Surface Balanced Pivot Hinge 79
Full Mortise Residential Hinges 80
Firepins™ 81
Double Swing Hinge 82
Emergency Release Stop 82
Power Transfer Units 84

INDEX:

PRODUCT	PAGE
DSH	83
DSH1000	82
EL-CEPT	84
EL-EPT	84
EL-EPTL	84
EL-EPT-SC	84
ERS	82
ERSBH	82
ERSMP	82
FM	73
FM_RG	75
FM_SF	76
FM_SLF	73
FM_SLF138	76
FM_SLI	73
FM_SLISF	76
FS	79
FS_CP	79
HM	78
HS	78
HS_SF	78
K_FM	75
OS_FM	72
OS_HS	72
RS138	80
RS175	80
SPFM	74
SPFM_SLF	74
SPFM_SLI	74
WT_FM	77
WT_HS	77
X25M	71

NOTE: Products shown in this section may not be drawn to scale

800-824-3018 | www.pemko.com

Check the web site for the up-to-date catalog

Copyright © 2015-2025, ASSA ABLOY Accessories and Door Controls Group, Inc., an ASSA ABLOY Group company. All rights reserved.
Reproduction in whole or in part without the express written permission of ASSA ABLOY Accessories and Door Controls Group, Inc. is prohibited.

PEMKO
ASSA ABLOY

Experience a safer
and more open world

What is PemkoHinge®?

PemkoHinge® consists of two full-height, paired and geared leaves. Each geared leaf rotates evenly from top to bottom riding on proprietary polymer blended bearings. The geared leaves and bearings are held together by a full-length channel cap. This assembly retains the smooth, clean lines of the door and frame, while easily supporting heavy vertical loads.

PemkoHinge®

SECURITY, SAFETY, PRIVACY, LOW WEAR AND TEAR

PemkoHinge® Attributes:

- With a continuous hinge, typical alignment problems (such as door sag and binding) are eliminated
- The continuous hinge distributes load stress uniformly along the full length of the door and frame
- The gear design of the continuous hinge ensures symmetrical operation of each leaf
- 1/2 lb. or less operating force required to operate most doors, regardless of size
- Low operating force feature makes continuous hinges ideal for doors used by the physically challenged
- The continuous hinge, when installed on standard steel doors and frames, requires no additional reinforcement. However, hinge preps must have fillers installed for proper operation
- A high degree of security can be achieved for exterior openings or restricted spaces by using a continuous hinge. With the geared construction and the full-length channel cap, the common gap between the door and frame is sealed, which provides security against prying
- In addition, the continuous full-height hinge cap protects against pinching fingers in doors in public areas, particularly those where children are present
- Sight proof design of the continuous hinge provides privacy for lavatories, executive offices, or file rooms

PemkoHinge® Superior Design:

- PemkoHinge® has increased critical stress points of the hinge leaf extrusions providing additional strengths and rigidity to the completed product
- PemkoHinge® bearing design eliminates premature wear, guarantees proper alignment, and requires fewer bearings to carry more weight. The bearing is produced for Pemko using a chemical composition and injection process that provides a stronger, more accurately formed bearing
- PemkoHinge® is designed with inter-meshing gear segments in the hinge which provide 50% more bearing surface resulting in less wear
- PemkoHinge® goes through the anodizing process after completing all machining. This means the machined aluminum surfaces that are in direct contact with the bearing have a smoother, harder surface, thereby reducing wear
- PemkoHinge® maintains uniform bearing spacing for the full length of the hinge even when lengths exceed 10'
- Pemko uses self drilling No.12-24 x 11/16" Flat Head Undercut, Type C, thread-forming fasteners, no tapping required
- PemkoHinge® commercial models are ideal for use on lead lined doors (i.e. hospital X-ray rooms), without requiring special screw locations

How To Order (Hinge Part Designations)

Example: D| SPFM | 85 | SLI | HD1

FINISHES		HINGE TYPES		LENGTHS		HINGE OPTIONS	CAPACITY	
BL	Black Anodized	FM	Full-Mortise	79	"blank"	Standard	"blank"	Standard Duty
BSP	Black Suede Powder Coat*	FS	Full-Surface	83	CP	Center Pivot	HD1	Heavy Duty, Grade 1
C	Clear Anodized	HS	Half-Surface	85	RG	Raised Gear	HD3	Heavy Duty, Grade 3
D	Dark Bronze Anodized	RS138	Full-Mortise Residential: 1 3/8"	95	SF	Safety		
G	Gold Powder Coat	RS175	Full-Mortise Residential: 1 3/4"	120	SL	Short Leaf (residential only)		
SN	Satin Nickel Powder Coat	SPFM	Special Full-Mortise		SLF	Short Leaf Flush		
WSP	White Suede Powder Coat *	WT_FM	Wide Throw Full-Mortise		SLI	Short Leaf Inset		
10BE	Satin Bronze Powder Coat *	WT_HS	Half-Surface					

**Only available on select profiles*

PEMKO
ASSA ABLOY
Experience a safer and more open world

800-824-3018 | www.pemko.com
Check the web site for the up-to-date catalog

Copyright © 2015-2025, ASSA ABLOY Accessories and Door Controls Group, Inc., an ASSA ABLOY Group company. All rights reserved. Reproduction in whole or in part without the express written permission of ASSA ABLOY Accessories and Door Controls Group, Inc. is prohibited.

BHMA Certification Program

This program was developed to establish product classifications through performance testing. Three grades (1, 2 and 3) of product classifications were established for continuous hinges, with three weight groups (150, 300 and 600) for each grade: Grade 3 being the lowest and Grade 1 being the highest classification. Each classification and weight group has a set of established cycle requirements and wear characteristics, with a minimum for vertical and lateral wear to establish a listing under a weight and grade classification, after the set number of cycles is completed.

Maximum Vertical Wear Allowable:

Grade 3 = 0.105"

Grade 2 = 0.030"

Grade 1 = 0.020"

Maximum Lateral Wear Allowable:

All Grades = 0.062"

Cycle requirements range from Grade 3-600 requiring 100,000 cycles through Grade 1-150 requiring 2.5 million cycles.

For more information on certification testing or other product certification programs, please contact Pemko Customer Service.

Hospital Tip

A special modification is available for certain hinges which provides a Hospital Tip Cap at the top of the gear cap, leaving no opening. A 45° angled cut on the gear cap and leaf covers provides a safe environment for hospitals and correctional facilities.

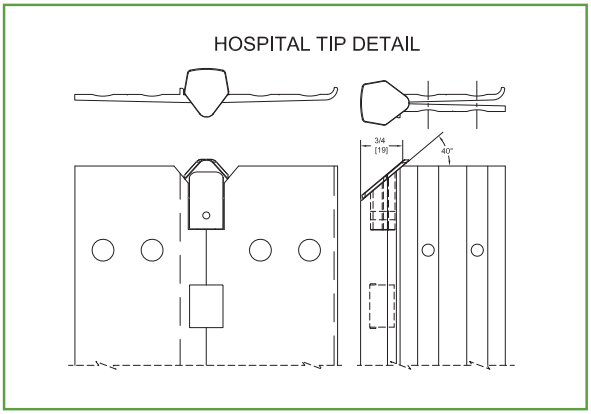

Cycle Requirements - *Per BHMA Standard ANSI/BHMA A156.26-2012*

- Standard Duty Hinges (excluding _RS175 & _RS138) conform to Grade 3-150 and Grade 3-300
- HD3 Hinges conform to Grade 3-150, Grade 3-300, and Grade 3-600
- HD1 Hinges conform to Grade 2-150, Grade 1-300, and Grade 1-600
- 1100 Series and X-Series Hinges conform to Grade 1-150

Weight Bearing - *Per BHMA Standard ANSI/BHMA A156.26-2012*

- This information pertains to all commercial models
- Heavier weight can be carried; please contact Customer Service for applications other than those listed in the chart
- Special hinge reinforcements are not required as hollow metal door and frame manufacturers' standard are acceptable. Removal of hinge reinforcements in the door and frame is not advised. Hinge preps must have fillers installed

UL Fire Labeled 1½ & 3 Hour

LISTED DOOR HINGE 76Y2

- All models designated with these symbols are tested and certified by Underwriters Laboratories Inc.® (U.S.A. and Canada) to standards UL10B, UL10C and UBC7.2 (positive pressure) for a 1½-Hour Fire Listing for all 4'0" x 10'0" and 8'0" x 10'0" door and frame assemblies. Fire listing certifications apply to all approved hollow metal and wood door assemblies in drywall or masonry wall construction
- Special FirePins™ are only required on 3-Hour assemblies. Please refer to page 95 for illustrations and information regarding the application of Pemko FirePins™

- All hinges are supplied with standard fastener kits. Replacement kits/individual fasteners may be purchased separately
- Particle Board/TORX fasteners may be purchased separately. Full-mortise hinges require 40 each; half-surface hinges require 20 each; full-surface hinges require 12 each
- All half-surface and full-surface hinges are supplied with a snap cover for the door leaf. Replacement snap covers may be purchased separately

Copyright © 2015-2025, ASSA ABLOY Accessories and Door Controls Group, Inc., an ASSA ABLOY Group company. All rights reserved.
Reproduction in whole or in part without the express written permission of ASSA ABLOY Accessories and Door Controls Group, Inc. is prohibited.

PEMKO
ASSA ABLOY
Experience a safer and more open world

ELECTRICALLY MODIFIED CONTINUOUS GEARED HINGES

Electrical Modifications

- Pemko has vastly improved the cycle performance of the electrically modified hinge. Performance testing has shown that 3,000,000+ cycles can now be achieved using Pemko's exclusive polyurethane-coated 4, 8, or 12 TRI-FLEX titanium copper alloy cables. Each cable is capable of carrying 6 amps continuous or 16 amps in-rush @ 24-volts for 820 milliseconds. When ordering, please use the "shorthand code" shown in the chart page 82. For example, if you require a Clear Anodized standard Full-Mortise hinge at 83" with Quick Connect transfer - 4-wire, modified 36¼" from the top, right hand, you would order a CFM83 with QC4 at 36¼" from top - RH

Options for Electrically Modified Continuous Geared Hinges

These options allow variable degrees of service to be performed at the specific locations of the current carrying cables by installing a serviceable/removable hinge which includes a removable module (SER), or installing a hinge with a pivoting accessible feature (ACC).

- Both options (SER & ACC) are available in 4 Wire (QC4), 8 Wire (QC8), 12 Wire (QC12) variants
- Available on FM, FS, HS, KFM, SLF, SLI, X25M Models

Serviceable/Removable (SER) Module

The hinge is furnished to be installed in three sections allowing the current carrying cable to be serviced or replaced without removing the door from the frame. Additionally, the SER option allows the current carrying cables to be safely stored or delivered to the electrician or security contractor prior to the installation of the electrified hardware, eliminating the necessity of the electrician or security contractor being present when the doors are being hung.

Product Numbering Example: CFM83HD1xSER4

Accessible (ACC) Feature

The hinge is furnished to be installed in a single section with the leaves modified to pivot at the location of the current carrying cable and allow access to the cables and connected wiring.

Product Numbering Example: CFM83HD1xACC4

Concealed Magnetic Monitoring (CM)

Concealed magnetic monitoring is also available with the SER and ACC options. Magnetic monitor is supplied with monitor and an adjustable magnet.

Product Numbering Example: CFM83HD1xSER4xCM
CFM83HD1xACC4xCM

Customer Information Needed:

- Specify handing and prep location

Included:

- HD1, 1100 and X-Series model hinges using Molex connectors with ElectroLynx® are warranted for five (5) years. Standard duty and HD3 hinges are warranted for one (1) year

ElectroLynx®

As part of their promise to provide innovative, fast and effective high security solutions to their customers, certain ASSA ABLOY Group brands offer ElectroLynx®, a universal quick-connect system that simplifies the electrification of the door opening.

ElectroLynx® is a registered trademark of ASSA ABLOY Inc.

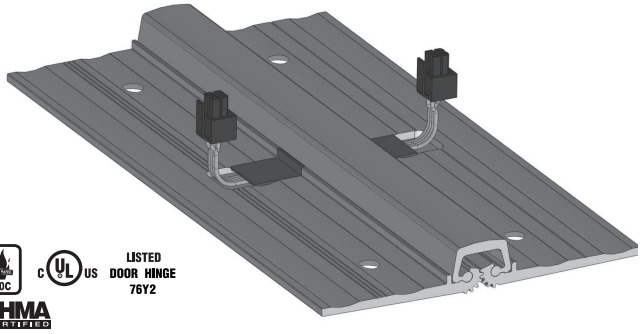

10C c UL us LISTED DOOR HINGE 76Y2 BHMA CERTIFIED

Quick Connect Transfer For Full Mortise (FM) Hinges	QC4 4 WIRE		Quick Connect Transfer For Full Surface (FS) & Half Surface (HS) Hinges	QC4_S 4 WIRE	
	QC8 8 WIRE			QC8_S 8 WIRE	
	QC12 12 WIRE			QC12_S 12 WIRE	

Additional Electrical Modifications Options	Code
Additional Length of Quick Connect Cable Leads	
Adjustable Concealed Magnetic Monitoring	CM
Power Transfer - Prep Only	PT

PEMKO ASSA ABLOY

Experience a safer and more open world

Copyright © 2015-2025, ASSA ABLOY Accessories and Door Controls Group, Inc., an ASSA ABLOY Group company. All rights reserved. Reproduction in whole or in part without the express written permission of ASSA ABLOY Accessories and Door Controls Group, Inc. is prohibited.

X-SERIES HINGES

- Thicker leaves than traditional continuous geared hinge and requires no additional clearance
- X-Series Hinges are HD1 Grade as standard
- X-Series hinges allow for a deeper cavity for electrical wires when ordering an electrified hinge

Full Mortise for 2½" Thick Door

- Wider hinge leaves to accommodate doors 2½" thick

X25M_

STANDARD FINISHES: **BSP, C, D, G, SN, WSP, 10BE**

ANSI/BHMA A156.18 for Materials and finishes

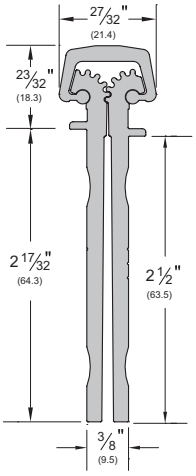

AVAILABLE FINISHES FOR PRODUCTS SHOWN ON THIS PAGE
10BE (Satin Bronze Powder Coated Aluminum) **BSP** (Black Suede Powder Coated Aluminum) **C** (Clear Anodized)
D (Dark Bronze Anodized) **G** (Gold Powder Coated Aluminum) **SN** (Satin Nickel Powder Coated Aluminum)
WSP (White Suede Powder Coated Aluminum)

Copyright © 2015-2025, ASSA ABLOY Accessories and Door Controls Group, Inc., an ASSA ABLOY Group company. All rights reserved.
Reproduction in whole or in part without the express written permission of ASSA ABLOY Accessories and Door Controls Group, Inc. is prohibited.

PEMKO
ASSA ABLOY
Experience a safer and more open world

OFFSET HINGES

- Used when extra clearance is needed when the door is open at 90°

Offset Full Mortise

_OS_FM

STANDARD FINISHES: **BSP, C, D, G, SN, WSP, 10BE**

LISTED DOOR HINGE 76Y2

ANSI/BHMA A156.18 for Materials and finishes

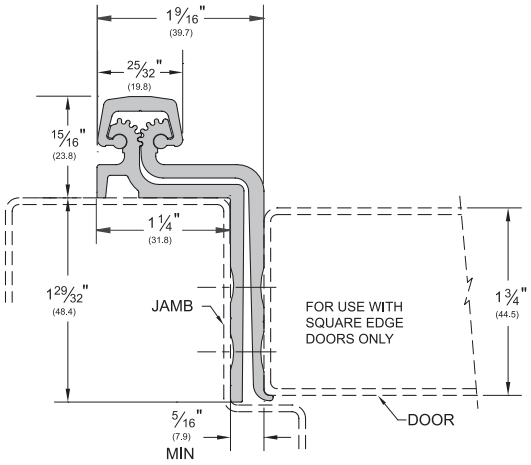

Offset Half Surface

- Replacement snap cover is C1 for Clear Anodized or D1 for Dark Bronze Anodized

_OS_HS

STANDARD FINISHES: **BSP, C, D, G, SN, WSP , 10BE**

LISTED DOOR HINGE 76Y2

ANSI/BHMA A156.18 for Materials and finishes

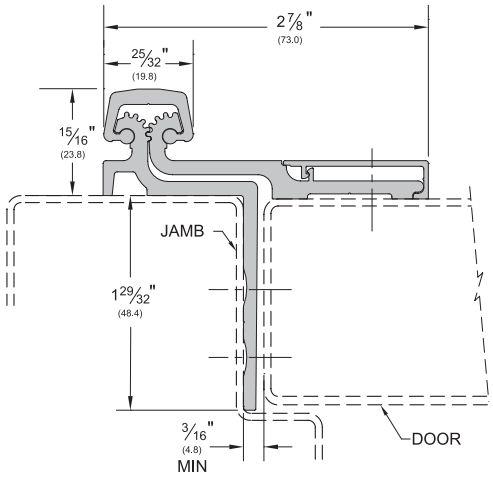

AVAILABLE FINISHES FOR PRODUCTS SHOWN ON THIS PAGE
10BE (Satin Bronze Powder Coated Aluminum) **BSP** (Black Suede Powder Coated Aluminum)
C (Clear Anodized) **D** (Dark Bronze Anodized) **G** (Gold Powder Coated Aluminum)
SN (Satin Nickel Powder Coated Aluminum) **WSP** (White Suede Powder Coated Aluminum)

Copyright © 2015-2025, ASSA ABLOY Accessories and Door Controls Group, Inc., an ASSA ABLOY Group company. All rights reserved. Reproduction in whole or in part without the express written permission of ASSA ABLOY Accessories and Door Controls Group, Inc. is prohibited.

FULL MORTISE HINGES

- Full-Mortise units are designed mainly for new door applications and are applied to the frame rabbet and door edge to conceal both leaves

Full Mortise

_FM

STANDARD FINISHES: **BSP, C, D, G, SN, WSP, 10BE**

LISTED DOOR HINGE 76Y2

Evaluated in accordance with TAS201-94, TAS202-94, TAS203-94, ASTM E330, ASTM E1886, ASTM E1996, and ANSI A250.13 (includes PemKonnect version)

ANSI/BHMA A156.18 for Materials and finishes

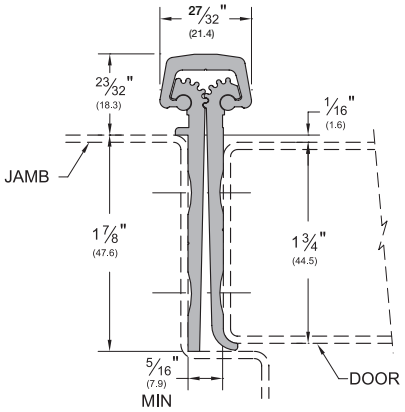

Modular Hinge Option

- Hinge is provided in 2 or 3 segments depending on length
- Hinges are packed in a shorter box and are easier to ship, transport, and store than traditional continuous hinges
- Available for select models, see price book for model availability

Full Mortise Short Leaf Inset

- Designed for use with doors which range between 1¾" to 2¼"
- Designed for use with hollow metal doors and frames where the inset conforms to S.D.I. specifications for aligning doors and frames

_FM_SLI

STANDARD FINISHES: **BSP, C, D, G, SN, WSP, 10BE**

LISTED DOOR HINGE 76Y2

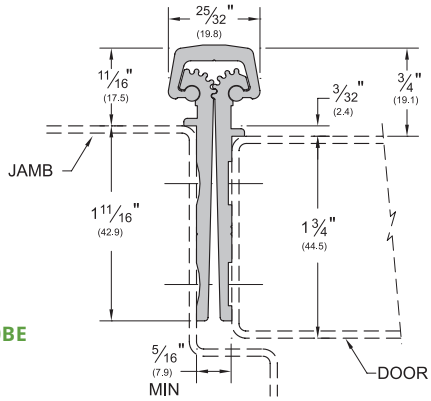

Evaluated in accordance with TAS201-94, TAS202-94, TAS203-94, ASTM E330, ASTM E1886, ASTM E1996, and ANSI A250.13

ANSI/BHMA A156.18 for Materials and finishes

Full Mortise Short Leaf Flush

- Designed for use with doors which range between 1¾" to 2¼"
- Also used for bifold applications to keep the faces of the doors flush (not illustrated)

_FM_SLF

STANDARD FINISHES: **BSP, C, D, G, SN, WSP, 10BE**

LISTED DOOR HINGE 76Y2

Evaluated in accordance with TAS201-94, TAS202-94, TAS203-94, ASTM E330, ASTM E1886, ASTM E1996, and ANSI A250.13 (includes PemKonnect version)

ANSI/BHMA A156.18 for Materials and finishes

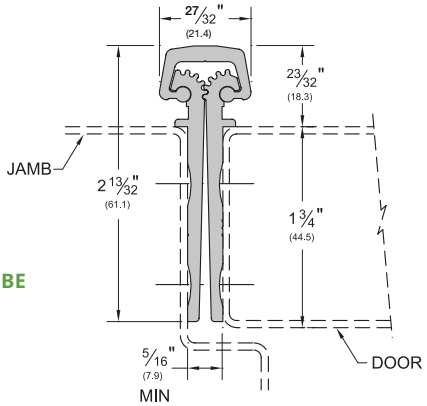

Modular Hinge Option

- Hinge is provided in 2 or 3 segments depending on length
- Hinges are packed in a shorter box and are easier to ship, transport, and store than traditional continuous hinges
- Available for select models, see price book for model availability

AVAILABLE FINISHES FOR PRODUCTS SHOWN ON THIS PAGE
10BE (Satin Bronze Powder Coated Aluminum) **BSP** (Black Suede Powder Coated Aluminum) **C** (Clear Anodized)
D (Dark Bronze Anodized) **G** (Gold Powder Coated Aluminum) **SN** (Satin Nickel Powder Coated Aluminum)
WSP (White Suede Powder Coated Aluminum)

800-824-3018 | www.pemko.com

Check the web site for the up-to-date catalog

Copyright © 2015-2025, ASSA ABLOY Accessories and Door Controls Group, Inc., an ASSA ABLOY Group company. All rights reserved.
Reproduction in whole or in part without the express written permission of ASSA ABLOY Accessories and Door Controls Group, Inc. is prohibited.

PEMKO
ASSA ABLOY
Experience a safer and more open world

SPECIAL FULL MORTISE HINGES

- Special Full-Mortise units are designed for door and frame applications where the hinge leaf may interfere with the weatherstrip, thermal break, or applied stop of the frame
- Special Full-Mortise hinges are applied to the frame rabbet and door edge to conceal both leaves

Special Full Mortise

_SPFM

STANDARD FINISHES: **BSP, C, D, G, SN, WSP, 10BE**

ANSI/BHMA A156.18 for Materials and finishes

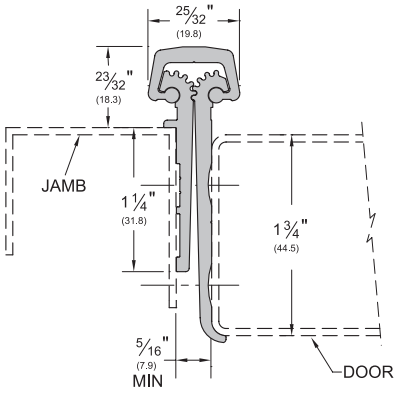

Special Full Mortise Short Leaf Inset

_SPFM_SLI

STANDARD FINISHES: **BSP, C, D, G, SN, WSP, 10BE**

ANSI/BHMA A156.18 for Materials and finishes

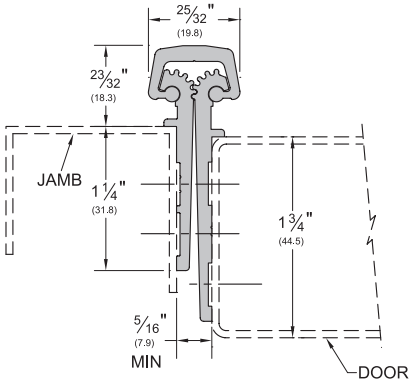

Special Full Mortise Short Leaf Flush

_SPFM_SLF

STANDARD FINISHES: **BSP, C, D, G, SN, WSP, 10BE**

ANSI/BHMA A156.18 for Materials and finishes

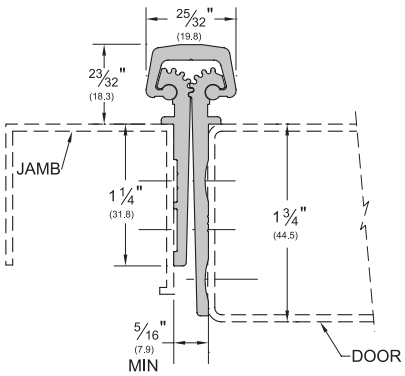

AVAILABLE FINISHES FOR PRODUCTS SHOWN ON THIS PAGE
10BE (Satin Bronze Powder Coated Aluminum) **BSP** (Black Suede Powder Coated Aluminum) **C** (Clear Anodized)
D (Dark Bronze Anodized) **G** (Gold Powder Coated Aluminum) **SN** (Satin Nickel Powder Coated Aluminum)
WSP (White Suede Powder Coated Aluminum)

Copyright © 2015-2025, ASSA ABLOY Accessories and Door Controls Group, Inc., an ASSA ABLOY Group company. All rights reserved. Reproduction in whole or in part without the express written permission of ASSA ABLOY Accessories and Door Controls Group, Inc. is prohibited.

FULL MORTISE HINGE

- Like our other Full Mortise units, the Kawneer Hinges are designed mainly for new door applications and are applied to the frame rabbet and door edge to conceal both leaves
- Developed for the Kawneer "Tuffline" series of aluminum doors

Kawneer Full Mortise

K_FM

STANDARD FINISHES: **BSP, C, D, G, SN, WSP, 10BE**

LISTED DOOR HINGE 76Y2

ANSI/BHMA A156.18 for Materials and finishes

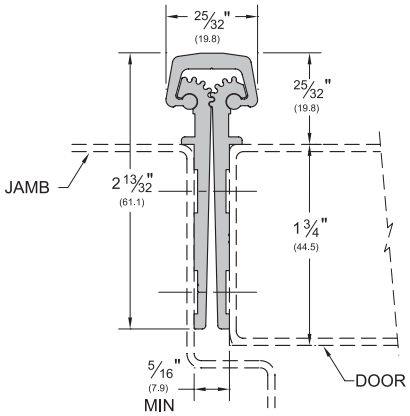

Raised Gear Hinge

- Designed for wood or metal cased openings when hinge is to be installed deep on the rabbet. The design of the leaves allows for the hinge to pivot without interference from the cap.
- Certain door/frame conditions may require an extra 1/32" to 1/16" clearance. Excessive clearance on fire rated assemblies may violate the requirements of NFPA80
- Heavy duty version available only

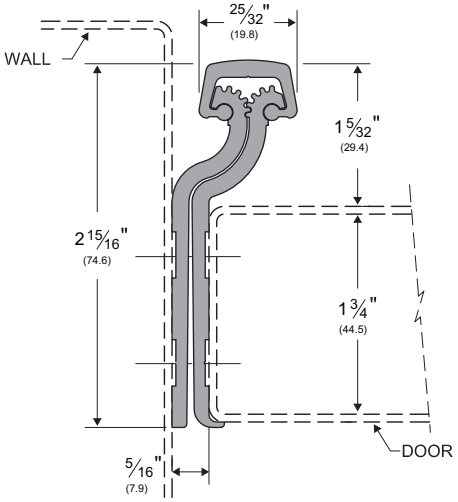

Full Mortise Raised Gear

_FM_RG

STANDARD FINISHES: **BSP, C, D, G, SN, WSP, 10BE**

LISTED DOOR HINGE 76Y2

ANSI/BHMA A156.18 for Materials and finishes

AVAILABLE FINISHES FOR PRODUCTS SHOWN ON THIS PAGE
10BE (Satin Bronze Powder Coated Aluminum) **BSP** (Black Suede Powder Coated Aluminum) **C** (Clear Anodized)
D (Dark Bronze Anodized) **G** (Gold Powder Coated Aluminum) **SN** (Satin Nickel Powder Coated Aluminum)
WSP (White Suede Powder Coated Aluminum)

Copyright © 2015-2025, ASSA ABLOY Accessories and Door Controls Group, Inc., an ASSA ABLOY Group company. All rights reserved.
Reproduction in whole or in part without the express written permission of ASSA ABLOY Accessories and Door Controls Group, Inc. is prohibited.

PEMKO
ASSA ABLOY
Experience a safer and more open world

FULL MORTISE SAFETY HINGE

- Full Mortise Safety units are designed mainly for new door applications in child care and nursing facilities
- These hinges require extra clearance and are applied to conceal both leaves

Full Mortise Safety

_FM_SF

STANDARD FINISHES: **BSP, C, D, G, SN, WSP, 10BE**

BHMA CERTIFIED

ANSI/BHMA A156.18 for Materials and finishes

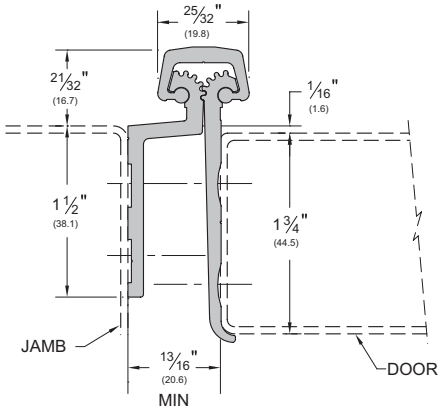

Full Mortise Short Leaf Inset Safety

_FM_SLISF

STANDARD FINISHES: **BSP, C, D, G, SN, WSP, 10BE**

BHMA CERTIFIED

ANSI/BHMA A156.18 for Materials and finishes

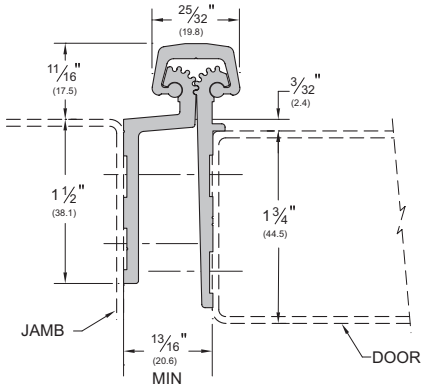

Full Mortise Hinge for 1 3/8" Door

- More bearings than _RS138 hinge to work in commercial grade application
- Shorter leaves for thinner doors

Full Mortise
FM_SLF138

STANDARD FINISHES: **BSP, C, D, G, SN, WSP, 10BE**

10C BHMA CERTIFIED c UL us LISTED DOOR HINGE 76Y2

ANSI/BHMA A156.18 for Materials and finishes

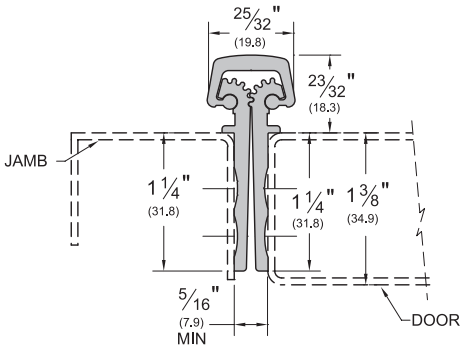

AVAILABLE FINISHES FOR PRODUCTS SHOWN ON THIS PAGE
10BE (Satin Bronze Powder Coated Aluminum) **BSP** (Black Suede Powder Coated Aluminum) **C** (Clear Anodized) **D** (Dark Bronze Anodized) **G** (Gold Powder Coated Aluminum) **SN** (Satin Nickel Powder Coated Aluminum) **WSP** (White Suede Powder Coated Aluminum)

PEMKO
ASSA ABLOY
Experience a safer and more open world

800-824-3018 | www.pemko.com
Check the web site for the up-to-date catalog

Copyright © 2015-2025, ASSA ABLOY Accessories and Door Controls Group, Inc., an ASSA ABLOY Group company. All rights reserved. Reproduction in whole or in part without the express written permission of ASSA ABLOY Accessories and Door Controls Group, Inc. is prohibited.

WIDE THROW FULL MORTISE HINGE

- Wide Throw Full Mortise units are designed mainly for new door applications that require extra clearance due to special frame, door or wall design, and are applied to the frame rabbet and door edge to conceal both leaves
- More clearance between the door and frame when door is open 180°
- Available only in heavy duty to support larger doors

Wide Throw Full Mortise

WT_FM

STANDARD FINISHES: **BSP, C, D, G, SN, WSP, 10BE**

ANSI/BHMA A156.18 for Materials and finishes

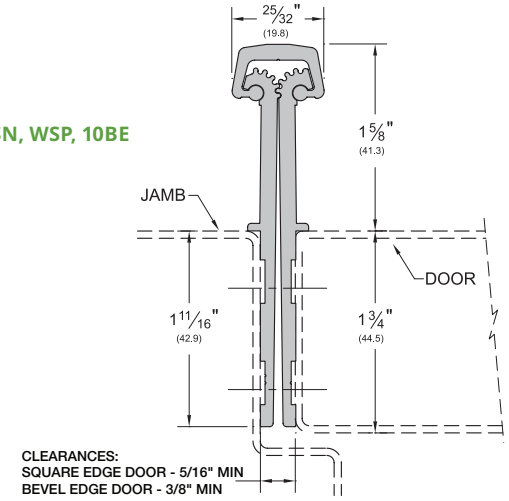

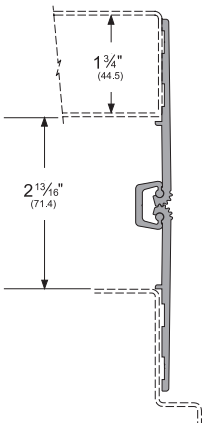

WT_FM in full open position.

WIDE THROW HALF SURFACE HINGE

- Wide Throw Half Surface units are designed mainly for retrofit applications that require extra clearance due to special frame, door, or wall design and are applied to the frame rabbet and the exposed door surface
- Wide Throw Half Surface units combine the versatility of the Half Surface unit and the clearance of a Wide Throw hinge into one
- Replacement snap cover is C1 for Clear Anodized or D1 for Dark Bronze Anodized

Wide Throw Half Surface

WT_HS

STANDARD FINISHES: **BSP, C, D, G, SN, WSP**

ANSI/BHMA A156.18 for Materials and finishes

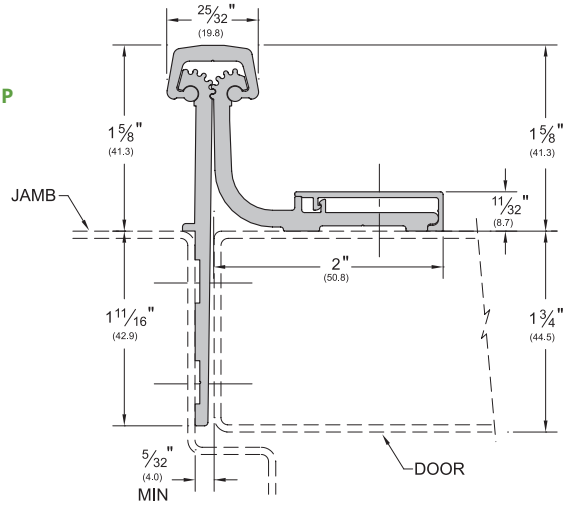

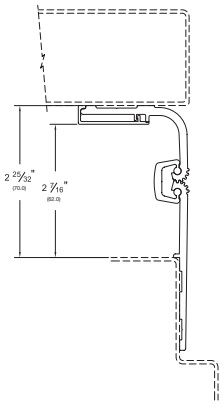

WT_HS in full open position.

AVAILABLE FINISHES FOR PRODUCTS SHOWN ON THIS PAGE AS INDICATED BY PROFILE
(see General Information section for finish chart)
10BE (Satin Bronze Powder Coated Aluminum) **BSP** (Black Suede Powder Coated Aluminum) **C** (Clear Anodized)
D (Dark Bronze Anodized) **G** (Gold Powder Coated Aluminum) **SN** (Satin Nickel Powder Coated Aluminum)
WSP (White Suede Powder Coated Aluminum)

800-824-3018 | www.pemko.com
Check the web site for the up-to-date catalog

Copyright © 2015-2025, ASSA ABLOY Accessories and Door Controls Group, Inc., an ASSA ABLOY Group company. All rights reserved.
Reproduction in whole or in part without the express written permission of ASSA ABLOY Accessories and Door Controls Group, Inc. is prohibited.

PEMKO
ASSA ABLOY
Experience a safer and more open world

HALF SURFACE HINGE

- Half Surface units are designed mainly for retrofit work, and are applied to the exposed surface of the door and the frame rabbet
- Designed for use with hollow metal frames, where the inset conforms to S.D.I. specifications for aligning d oors and frames
- Allows for adjustments in order to properly align edge of the door to the frame
- Replacement snap cover is C1 for Clear Anodized or D1 for Dark Bronze Anodized

Half Surface

_HS

STANDARD FINISHES: **BSP, C, D, G, SN, WSP, 10BE**

ANSI/BHMA A156.18 for Materials and finishes

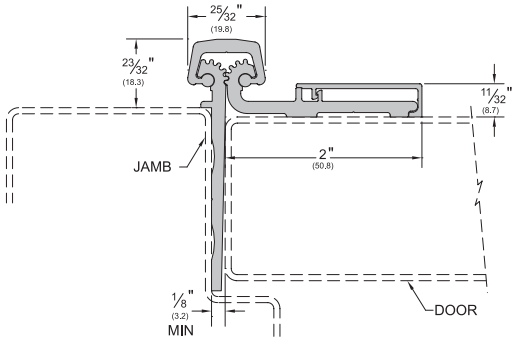

HALF SURFACE SAFETY HINGE

- Half Surface Safety units are designed mainly for retrofit work in child care and nursing facilities and are applied to the exposed surface of the door and the frame rabbet
- Replacement snap cover is C1 for Clear Anodized or D1 for Dark Bronze Anodized

Half Surface Safety

_HS_SF

STANDARD FINISHES: **BSP, C, D, G, SN, WSP**

ANSI/BHMA A156.18 for Materials and finishes

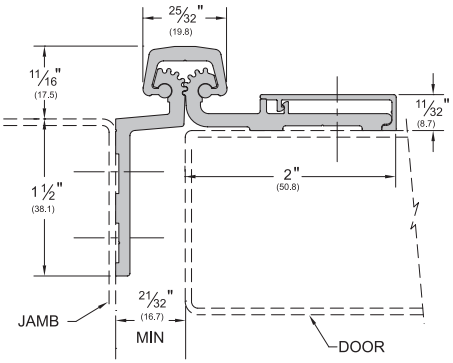

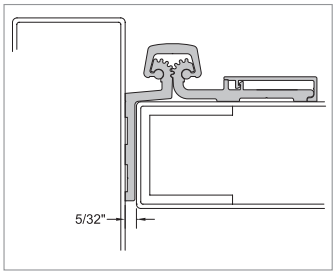

HS_SF in deep frame application is no longer a safety hinge

HALF MORTISE HINGE

- Half Mortise units are designed mainly for retrofit work and are applied to the exposed surface of the frame a nd the door edge
- Designed to require only 5/32" clearance instead of 5/16" and also allows for adjustments to properly align edge of the door to the frame face
- Replacement snap cover is C29316 for Clear Anodized or D29316 for Dark Bronze Anodized

Half Mortise

_HM

STANDARD FINISHES: **BSP, C, D, G, SN, WSP, 10BE**

ANSI/BHMA A156.18 for Materials and finishes

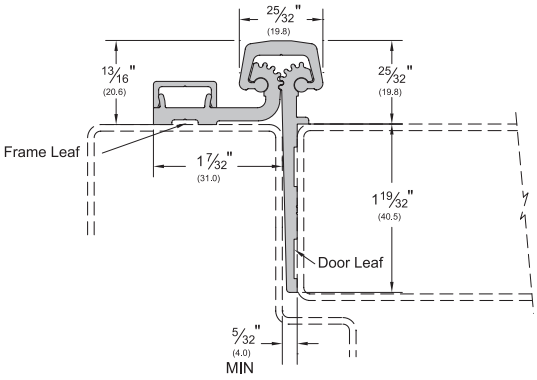

AVAILABLE FINISHES FOR PRODUCTS SHOWN ON THIS PAGE
10BE (Satin Bronze Powder Coated Aluminum) **BSP** (Black Suede Powder Coated Aluminum) **C** (Clear Anodized) **D** (Dark Bronze Anodized) **G** (Gold Powder Coated Aluminum) **SN** (Satin Nickel Powder Coated Aluminum) **WSP** (White Suede Powder Coated Aluminum)

Copyright © 2015-2025, ASSA ABLOY Accessories and Door Controls Group, Inc., an ASSA ABLOY Group company. All rights reserved. Reproduction in whole or in part without the express written permission of ASSA ABLOY Accessories and Door Controls Group, Inc. is prohibited.

STANDARD FULL SURFACE HINGE

- Full Surface units are designed mainly for retrofit work, and are applied to the exposed surfaces of the door and frame
- Replacement snap cover is C1 for Clear Anodized or D1 for Dark Bronze Anodized

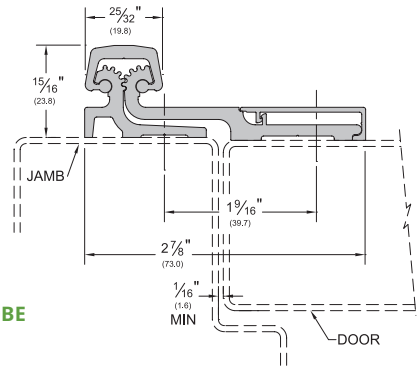

Full Surface

_FS

STANDARD FINISHES: **BSP, C, D, G, SN, WSP, 10BE**

10C BHMA CERTIFIED c UL us LISTED DOOR HINGE 76Y2

Evaluated in accordance with TAS201-94, TAS202-94, TAS203-94, ASTM E330, ASTM E1886, ASTM E1996, and ANSI A250.13 (PemKonnect version only)

ANSI/BHMA A156.18 for Materials and finishes

Modular Hinge Option

- Hinge is provided in 2 or 3 segments depending on length
- Hinges are packed in a shorter box and are easier to ship, transport, and store than traditional continuous hinges
- Available for select models, see price book for model availability

FULL SURFACE CENTER PIVOT HINGE

- Full Surface Center Pivot units are designed mainly for retrofit work and are applied to the exposed surfaces of the door and frame
- Full Surface Center Pivot units easily replace butt hinges since no door or frame adjustments are necessary and are more versatile with restricted frame faces
- Replacement snap cover for door leaf is C1 for Clear Anodized or D1 for Dark Bronze Anodized. Replacement snap cover for frame leaf is C29316 for Clear Anodized or D29316 for Dark Bronze Anodized

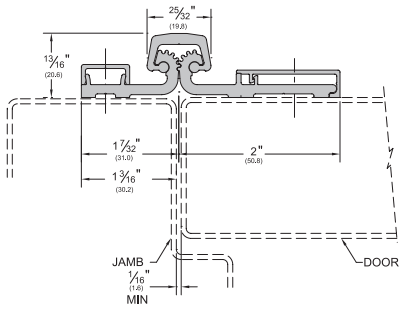

Full Surface Center Pivot

_FS_CP

STANDARD FINISHES: **BSP, C, D, G, SN, WSP, 10BE**

10C BHMA CERTIFIED c UL us LISTED DOOR HINGE 76Y2

ANSI/BHMA A156.18 for Materials and finishes

Modular Hinge Option

- Hinge is provided in 2 or 3 segments depending on length
- Hinges are packed in a shorter box and are easier to ship, transport, and store than traditional continuous hinges
- Available for select models, see price book for model availability

AVAILABLE FINISHES FOR PRODUCTS SHOWN ON THIS PAGE
10BE (Satin Bronze Powder Coated Aluminum) **BSP** (Black Suede Powder Coated Aluminum) **C** (Clear Anodized)
D (Dark Bronze Anodized) **G** (Gold Powder Coated Aluminum) **SN** (Satin Nickel Powder Coated Aluminum)
WSP (White Suede Powder Coated Aluminum)

800-824-3018 | www.pemko.com

Check the web site for the up-to-date catalog

Copyright © 2015-2025, ASSA ABLOY Accessories and Door Controls Group, Inc., an ASSA ABLOY Group company. All rights reserved.
Reproduction in whole or in part without the express written permission of ASSA ABLOY Accessories and Door Controls Group, Inc. is prohibited.

PEMKO ASSA ABLOY
Experience a safer and more open world

FULL MORTISE RESIDENTIAL HINGES

- Full Mortise Residential units are designed mainly for new door and frame applications, and are applied to conceal both leaves

NOTE: All RS series hinges are excluded from the "LIFE OF THE OPENING" guarantee, and instead carry a ten (10) year warranty

_RS175

STANDARD FINISHES: **C, D**

- Designed for 1¾" MAXIMUM thickness with a weight up to 90 lbs.

ANSI/BHMA A156.18 for Materials and finishes

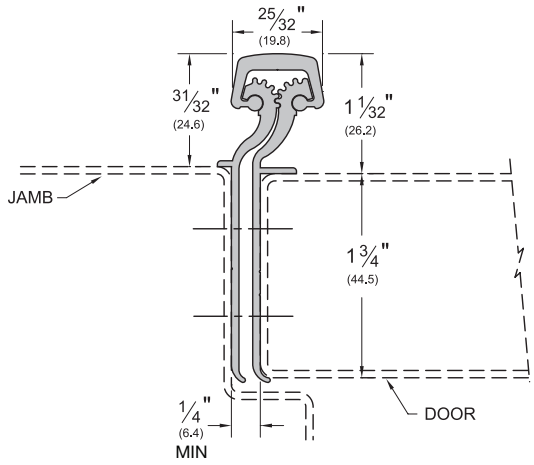

_RS138

STANDARD FINISHES: **C, D**

- Shorter leaves for thinner doors
- Designed for doors 1⅜" thick with a weight limit up to 90 lbs.

ANSI/BHMA A156.18 for Materials and finishes

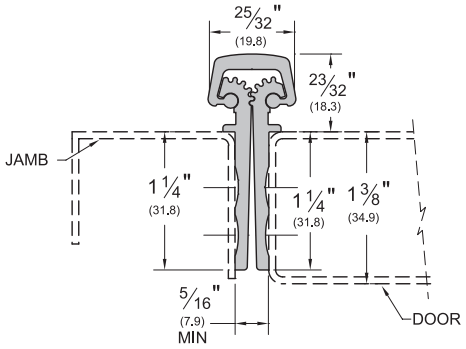

AVAILABLE FINISHES FOR PRODUCTS SHOWN ON THIS PAGE
C (Clear Anodized) **D** (Dark Bronze Anodized)

800-824-3018 | www.pemko.com
Check the web site for the up-to-date catalog

Copyright © 2015-2025, ASSA ABLOY Accessories and Door Controls Group, Inc., an ASSA ABLOY Group company. All rights reserved. Reproduction in whole or in part without the express written permission of ASSA ABLOY Accessories and Door Controls Group, Inc. is prohibited.

FIREPINS FOR USE WITH 3-HOUR FIRE RATED ASSEMBLIES

- FirePins™ are required to achieve 3-hour fire rating
- Although PemkoHinge® Continuous Hinges carry UL Fire Ratings unequaled in the industry, some applications may require the use of FirePins™
- FirePin™ applications fall within the UL guidelines for retro-fitting assemblies in the field. Expensive shop modifications and door/frame reinforcements are not required
- FirePins™ also add extra security to a door assembly

Full Mortise Hinges

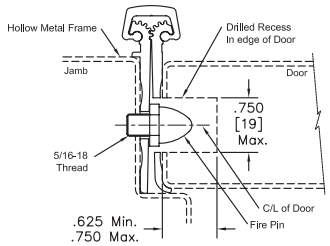

FirePin Locations

- The locations (illustrated right) indicate where holes should be drilled on the hinge edge of the door
- These locations are appropriate for all hinge models (Full Mortise, Full Surface, and Half Surface)

Full Surface Hinges

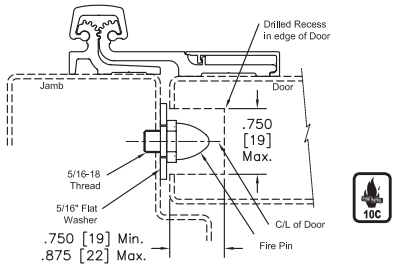

Half Surface Hinges

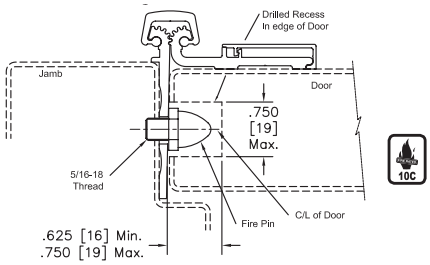

80" to 95" Hinges

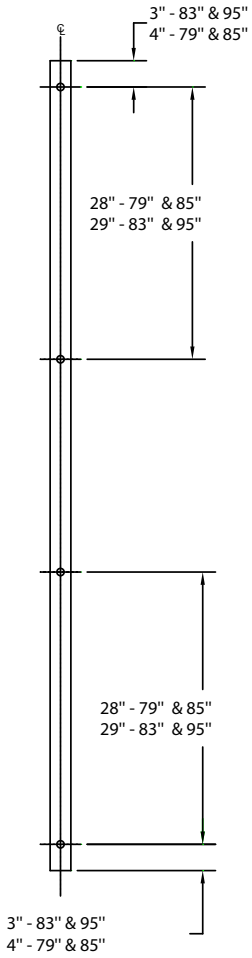

96" to 120" Hinges

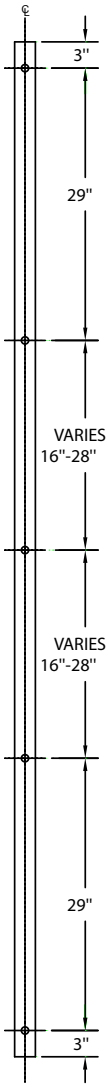

Copyright © 2015-2025, ASSA ABLOY Accessories and Door Controls Group, Inc., an ASSA ABLOY Group company. All rights reserved.
Reproduction in whole or in part without the express written permission of ASSA ABLOY Accessories and Door Controls Group, Inc. is prohibited.

PEMKO
ASSA ABLOY
Experience a safer and more open world

DOUBLE SWING HINGE AND EMERGENCY RELEASE STOP

- Innovative healthcare solutions that permits quick door opening in an emergency situation.
- Emergency Release Stop (ERSBH and ERSMP) allows the door to swing in the opposite direction during an emergency. A security key is provided to release the stop from the locked position. For a keyless system, the ERSMP-KL or ERSMP-RK can be used to create a system that releases with a knob turn.
- Double Swing Hinge (DSH) has a unique 100° swing and allows the door to swing in either direction
- The Geared Aluminum Double Swing Hinge DSHP01 is an option to use with Emergency Release Stop. This is not OMH approved.
- When used together, the DSH and ERS create a complete anti-barricade system.
- Order form required, available online.

PEMKO DSH1000 DOUBLE SWING HINGE

Standard Features

Barrel Type Hinge
.250" diameter stainless steel pin (rod)
Medical bearings

Material
6063-T6 aluminum alloy

Finishes
Clear Anodized (628)
Order form required, available online.

Standards
ANSI/BHMA Standard A156.26 Grade 1
ANSI/BHMA A156.18 for Materials and finishes

Mounting Hardware
12-24 x 11/16" Torx Flat Head Undercut TEK Screws
#12-8 Torx Flat Head Particle Board Screw

Capacity
Supports weights up to 600 lbs.
4'0" maximum door width

Standard Sizes
7'0", 8'0", 10'0"

Hole Pattern
Symmetrically templated

Handing
Handing not required

CMS Compliant
Eliminating additional ligature points ensures compliance for reimbursement through CMS (Centers for Medicare and Medicaid Services)

DSH1000

AVAILABLE FINISHES: **C**

This door edge mounted aluminum pin & barrel type hinge has a unique feature that allows the door to swing in either direction up to 100°. When used in conjunction with Pemko Emergency Release Stop (ERS) provides an anti-barricade system.

Refer to the New York State Office of Mental Health (OMH) Patient Safety Standards for current product compliance.

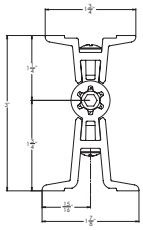

Door Closed

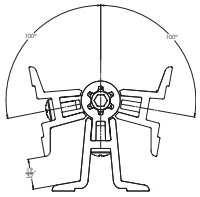

Door Open 100° Either Direction

Emergency Release Stop

- Minimum 2 3/4" backset for hardware trim

NOTE: With 2 3/4" hardware trim backset, a Notch is required in the ERS to clear the hardware trim. The type of Notch is determined by the manufacturer based on the information provide on the order form.

- To avoid using an extended lip strike, use a single rabbet jamb on strike side of frame only with cased open header and hinge jamb.
- Refer to the New York State Office of Mental Health (OMH) Patient Safety Standards for current product compliance.

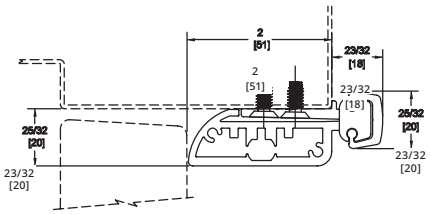

ERS

AVAILABLE FINISHES: **C**

Hinge Size	Opening	Clear Anodized – Left Hand	Clear Anodized – Right Hand
84"	7' 0"	ERSBH84Cx--xHT-LH	ERSBH84Cx--xHT-RH
96"	8' 0"	ERSBH96Cx--xHT-LH	ERSBH96Cx--xHT-RH
120"	10' 0"	ERSBH120Cx--xHT-LH	ERSBH120Cx--xHT-RH
84"	7' 0"	ERSMP84Cx--xHT-LH	ERSMP84Cx--xHT-RH
96"	8' 0"	ERSMP96Cx--xHT-LH	ERSMP96Cx--xHT-RH
120"	10' 0"	ERSMP120Cx--xHT-LH	ERSMP120Cx--xHT-RH
84"	7' 0"	ERSMPK84C--xHTxLH	ERSMPK84C--xHTxRH
96"	8' 0"	ERSMPK96C--xHTxLH	ERSMPK96C--xHTxRH
120"	10' 0"	ERSMPK120C--xHTxLH	ERSMPK120C--xHTxRH

**-- Notch - To be determined based on the information provided on the order form*

The ERSMP Retrofit Kit (ERSMP-RF) is used for doors already using the standard ERSMP system. This changes the ERSMP from a keyed system to an easy access system that releases with a simple turn of a knob.

AVAILABLE FINISHES FOR PRODUCTS SHOWN ON THIS PAGE
C (Clear Anodized)

PEMKO
ASSA ABLOY
Experience a safer and more open world

800-824-3018 | www.pemko.com
Check the web site for the up-to-date catalog

Copyright © 2015-2025, ASSA ABLOY Accessories and Door Controls Group, Inc., an ASSA ABLOY Group company. All rights reserved. Reproduction in whole or in part without the express written permission of ASSA ABLOY Accessories and Door Controls Group, Inc. is prohibited.

Double Swing Hinge

- Meets the cycle test requirements for ANSI/BHMA A156.26 for Continuous Hinges.
- Meets the barrier free requirements of ICC/ANSI A117.1 and ADAAG (2010)

DSH

AVAILABLE FINISHES: **C**

- Designed for 1 3/4" MAXIMUM thickness with a weight up to 250 lbs.

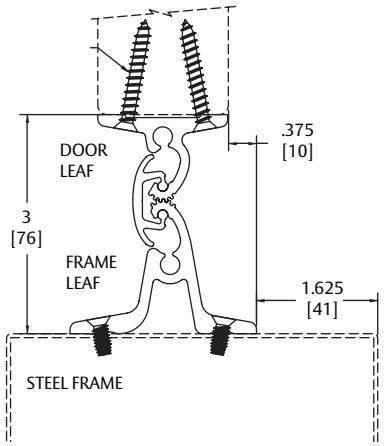

ANSI/BHMA A156.18 for
Materials and finishes

Hinge Size	Opening	Clear Anodized
84"	7' 0"	DSHP01C-84
96"	8' 0"	DSHP01C-96
120"	10' 0"	DSHP01C-120

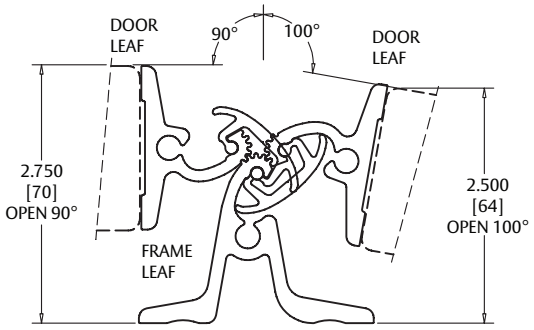

NOTE: DSH1000 Pin & Barrel Double Swing Hinge shown on page 95

Copyright © 2015-2025, ASSA ABLOY Accessories and Door Controls Group, Inc., an ASSA ABLOY Group company. All rights reserved.
Reproduction in whole or in part without the express written permission of ASSA ABLOY Accessories and Door Controls Group, Inc. is prohibited.

PEMKO
ASSA ABLOY
Experience a safer
and more open world

POWER TRANSFERS

- These Securitron electronic power transfer units fit into doors and frames to transfer power from your power supply to the door-mounted electronic device
- Contact your hinge manufacturer for cutout availability
- Order form required, available online

EL-CEPT

AVAILABLE COLORS:
US32D, US10B

- Mortises into the edges of the door and frame
- Tamper-resistant; no exposed openings
- All metal construction, including backboxes
- 7/8" knockouts on back boxes to accommodate EMF-type fitting
- 12-wire configuration with ElectroLynx compatible connectors
- Tested to 1,000,000 cycles
- Will not work on center-hung or balanced doors
- Works with most continuous hinges, up to 6" wide
- UL10B and UL10C listed

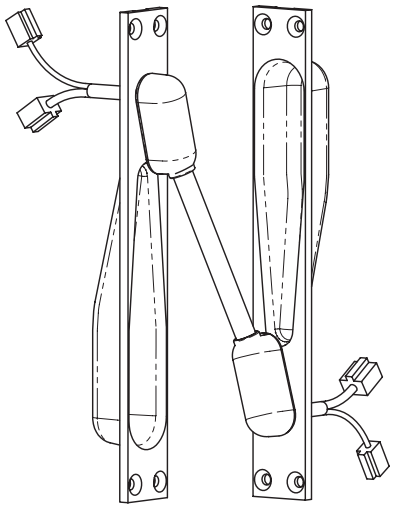

EL-EPT

AVAILABLE COLORS:
US2C

- Installs in the door and frame edges
- Flexible steel shield protects wires–3/8" (9.5mm) I.D.
- New universal device; works with most butt and continuous hinges
- Not for use with center pivot doors or with pivot hinges with offset greater than 3/4"
- UL634, UL10B, UL10C Listed
- ANSI A250.13-2003–Windstorm Resistant

EL-EPTL

AVAILABLE COLORS:
US2C

- Installs in the door and frame edges
- Flexible steel shield protects wires–3/8" (9.5mm) I.D.
- New universal device; works with most butt and continuous hinges
- Not for use with center pivot doors or with pivot hinges with offset greater than 3/4"
- UL634, UL10B, UL10C Listed
- ANSI A250.13-2003–Windstorm Resistant

EL-EPT-SC

AVAILABLE COLORS:
US2C

- Installs in the door and frame edges
- Flexible steel shield protects wires– 3/8" (9.5mm) I.D.
- New universal device; works with most butt and continuous hinges
- Functions on off-set pivot and swing clear hinged doors
- UL634, UL10B, UL10C Listed
- ANSI A250.13-2003–Windstorm Resistant

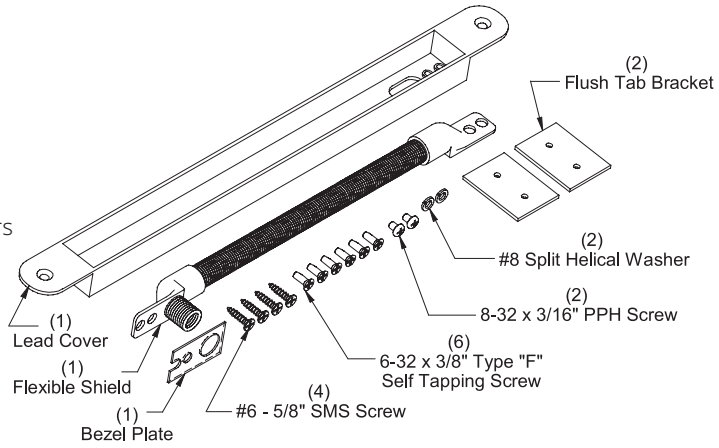

PEMKO
ASSA ABLOY
Experience a safer and more open world

800-824-3018 | www.pemko.com
Check the web site for the up-to-date catalog

Copyright © 2015-2025, ASSA ABLOY Accessories and Door Controls Group, Inc., an ASSA ABLOY Group company. All rights reserved. Reproduction in whole or in part without the express written permission of ASSA ABLOY Accessories and Door Controls Group, Inc. is prohibited.

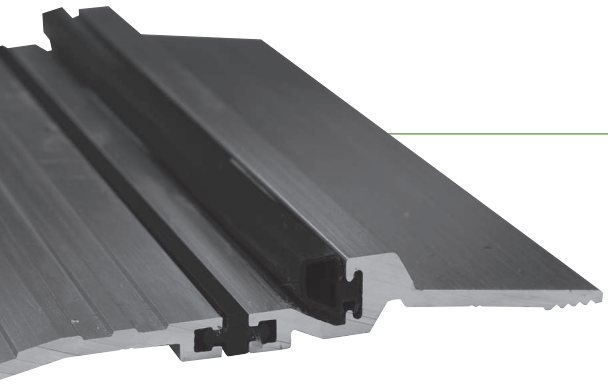

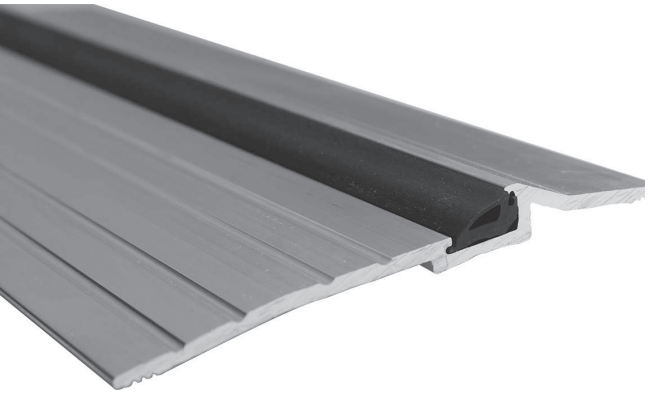

COMMERCIAL THRESHOLDS

CONTENTS:

Saddle Thresholds 86
Half Saddle Thresholds 91
Offset Saddles and Offset Half Saddles 93
Stainless Steel Saddles 94
Thermal Break Saddles 95
Stainless Steel Thermal Break Threshold 98
Latching Panic Exit Saddles 99
Latching Panic Exit Saddles - Thermal Break 103
Acoustic Thresholds 106
Threshold with Flexible Joint 106
Concealed Fastener Thresholds 107
Eco-V™ Thresholds 108
Adjustable-Width Eco-V™ Threshold 109
Heavy Duty Latching Panic Exit Saddle Threshold 110
Heavy Duty Thresholds 110
Modular Heavy Duty Thresholds 111
Water Return Thresholds 112
Floor Plates/Safety Treads 113
Aluminum Plates 114
Carpet Separators 115
Floor Plate Supports/Accessories and Elevators 116
Threshold Stop Strips 117
Floor Closer Thresholds/Cover Plate Assemblies 118
ANSI/BHMA A156.21 Thresholds - Cross Reference 119

INDEX:

PRODUCT	PAGE
14/1	114
18/1	114
151	86
154	88
154SS	94
157	93
158	93
159	101
166	88
169	88
170	88
171	89
172	89
173	86
174	115
175	88
175SS	94
176	89
176	118
176x170	118
176x171	118
177	101
179	100
181	101
182	93
183	116
184	117
185	102
190	113
191	113
192	113
193	113
193x2/195	118
195	116
196	116
200	116
227	113
228	113
229	113
230	115
236	115
252	92
252x2_FG	96
252x2SSFG	98
252x3_FG	96
252x3SSFG	98
252x4SSFG	98
252x226	102
252x226_FG	103
253	92
253x3_FG	96
253x3SS FG	98
253x4_FG	96
253x4SS FG	98
253x6_FG	97
253x226_FG	103
254	92
254x4	90
254x4_FG	97
254x4SS FG	98
254x4x170	118
254x4x171	118
254x5_FG	97
254x226	102
254x226_FG	103
255	92
255x5	90
255x5_FG	96
255x 226	102
255x226_FG	103
256	92
256x6	90
256x6_FG	95
257x259	118
270	86
271	86
272	86
273	91
273x3_FG	95
273x4_FG	95
273x224_FG	104
273x292_FGPK	105
274	91
274x4	87
274x4_FG	95
274x4x270	118
274x4x271	118
274x224_FG	104
274x292_FGPK	105
276	87
276	118
276x270	118
276x271	118
277	100
278	91
278x224_FG	104
278X292_FGPK	105
279	91
279x224_FG	104
279x292_FGPK	105
282	116
283	116
290	117
566	93
566x3_FG	97
573x5_FG	106
650	107
651	107
671	107
766	93
766x3_FG	97
1547	88
1710	89
1715	110
1716	111
1717	111
1718	111
1719	111
1745	112
1842	117
1855	101
1951	115
2001	99
2002	99
2005	99
2006	99
2006STC	106
2008	106
2009	100
2010	100
2266	113
2286	113
2364	115
2548	89
2548	118
2548x170	118
2548x171	118
2549	90
2550	90
2555	92
2565	92
2705	110
2715	110
2716	110
2727	93
2746	91
2746x6	87
2746x6_FG	95
2746x292_FGPK	105
2748	87
2748	118
2748x270	118
2748x271	118
2749	87
2750	87
2755	91
19125	114
ADJ232V8	109
ADJ232V14	109
ADJ232x2325V8	109
EV232	108
EV2320	108
EV2322	108
EV2325	108
EV2326	108

800-824-3018 | www.pemko.com

Check the web site for the up-to-date catalog

Copyright © 2015-2025, ASSA ABLOY Accessories and Door Controls Group, Inc., an ASSA ABLOY Group company. All rights reserved.
Reproduction in whole or in part without the express written permission of ASSA ABLOY Accessories and Door Controls Group, Inc. is prohibited.

PEMKO

ASSA ABLOY

Experience a safer and more open world

SADDLE THRESHOLDS

- To use a saddle threshold in an offset condition, use an elevator (see page 131)

173_

AVAILABLE FINISHES: **10BE, 4E, A, BSP, D, WSP**
ANSI (aluminum): **J32300, J32330**

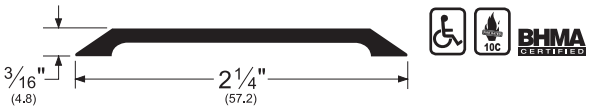

151_

AVAILABLE FINISHES: **10BE, 4E, A, BSP, D, WSP**
ANSI (aluminum): **J32300, J32330**

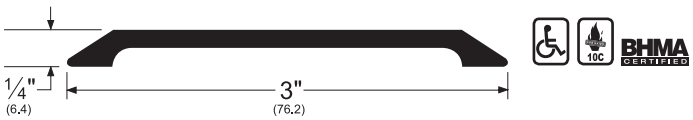

270_

AVAILABLE FINISHES: **10BE, 4E, A, B, BSP, D, G, WSP**
ANSI (aluminum): **J32100, J32130**
ANSI (brass): **J12300, J12330**

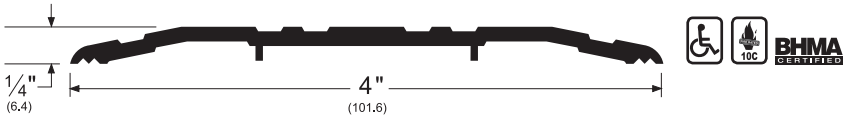

271_

AVAILABLE FINISHES: **10BE, 4E, A, B, BSP, D, G, SN, WSP**
ANSI (aluminum): **J32100, J32130**
ANSI (brass): **J12100, J12130**

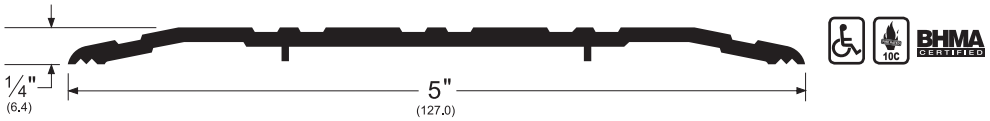

272_

AVAILABLE FINISHES: **10BE, 4E, A, B, BSP, D, G, WSP**
ANSI (aluminum): **J32100, J32130**
ANSI (brass): **J12100, J12130**

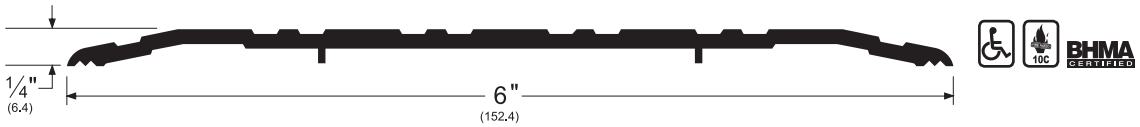

NOTE: Products shown in this section may not be drawn to scale.

AVAILABLE FINISHES FOR PRODUCTS SHOWN ON THIS PAGE
10BE (Satin Bronze Powder Coated Aluminum) **4E** (Translucent Brass Powder Coat) **A** (Mill Finish Aluminum)
B (Mill Finish Extruded Bronze [Brass]) **BSP** (Black Suede Powder Coated Aluminum) **D** (Dark Bronze Anodized)
G (Gold Anodized) **SN** (Satin Nickel Anodized) **WSP** (White Suede Powder Coated Aluminum)

NOTE: **G, SN** are available with limited inventory

Copyright © 2015-2025, ASSA ABLOY Accessories and Door Controls Group, Inc., an ASSA ABLOY Group company. All rights reserved. Reproduction in whole or in part without the express written permission of ASSA ABLOY Accessories and Door Controls Group, Inc. is prohibited.

SADDLE THRESHOLDS *(Cont.)*

276_

AVAILABLE FINISHES: **10BE, 4E, A, BSP, D, WSP**
ANSI (aluminum): **J32100, J32130, J39100, J39130, J39135, J39150**

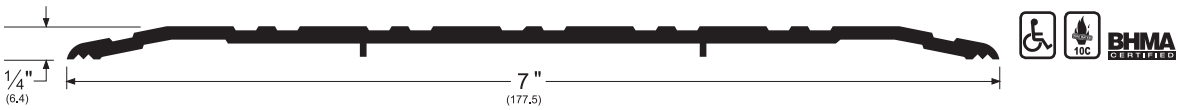

2748_

AVAILABLE FINISHES: **10BE, 4E, A, BSP, D, WSP**
ANSI (aluminum): **J32100, J32130, J39100, J39130, J39135, J39150**

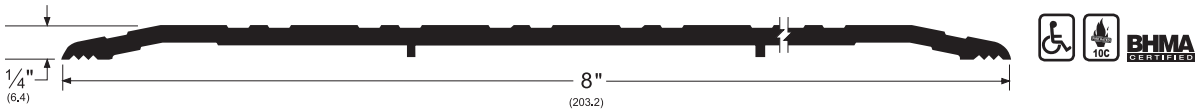

274x4_

AVAILABLE FINISH: **B**
ANSI (brass): **J12100, J12130, J19100, J19130, J19135, J19150**

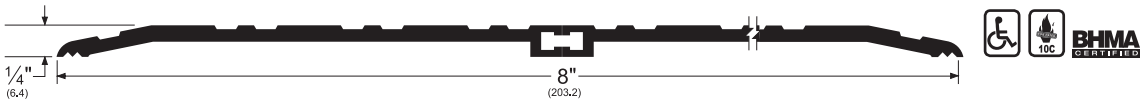

Welded on bottom.

2746x6_

AVAILABLE FINISHES: **10BE, 4E, A, BSP, D, WSP**
ANSI (aluminum): **J32100, J32130**

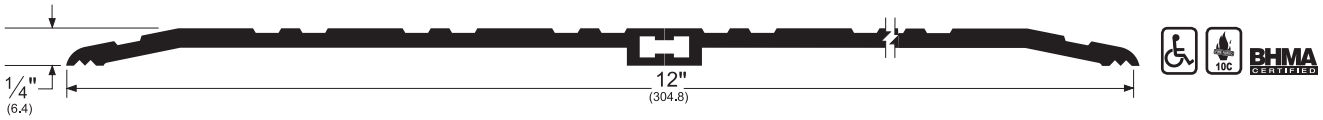

Welded on bottom.

2749_

AVAILABLE FINISHES: **10BE, 4E, A, BSP, D, WSP**
ANSI (aluminum): **J32100, J32130**

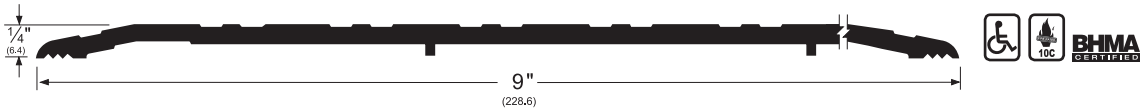

2750_

AVAILABLE FINISHES: **10BE, 4E, A, BSP, D, WSP**
ANSI (aluminum): **J32100, J32130**

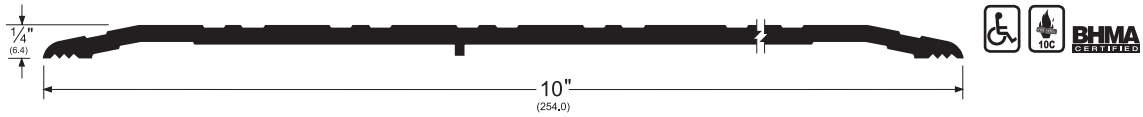

Includes two support legs (only one shown due to break in drawing)

NOTE: Products shown in this section may not be drawn to scale.

AVAILABLE FINISHES FOR PRODUCTS SHOWN ON THIS PAGE
10BE (Satin Bronze Powder Coated Aluminum) **4E** (Translucent Brass Powder Coat) **A** (Mill Finish Aluminum)
B (Mill Finish Extruded Bronze [Brass]) **BSP** (Black Suede Powder Coated Aluminum) **D** (Dark Bronze Anodized)
WSP (White Suede Powder Coated Aluminum)

Copyright © 2015-2025, ASSA ABLOY Accessories and Door Controls Group, Inc., an ASSA ABLOY Group company. All rights reserved.
Reproduction in whole or in part without the express written permission of ASSA ABLOY Accessories and Door Controls Group, Inc. is prohibited.

PEMKO
ASSA ABLOY
Experience a safer and more open world

SADDLE THRESHOLDS *(Cont.)*

169_

AVAILABLE FINISHES: **10BE, 4E, A, BSP, D, WSP**
ANSI (aluminum): **J32100, J32130**

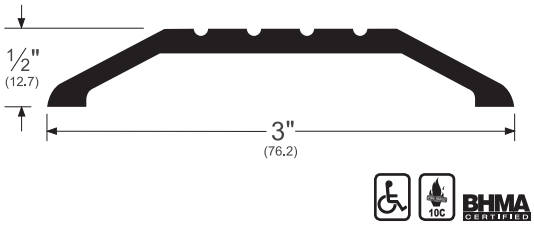

166_

AVAILABLE FINISHES: **10BE, 4E, A, BSP, D, WSP**
ANSI (aluminum): **J32100, J32130**

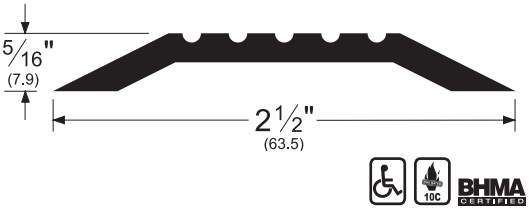

170_

AVAILABLE FINISHES: **10BE, 4E, A, B, BSP, D, WSP**
ANSI (aluminum): **J32100, J32130**
ANSI (brass): **J12100, J12130**

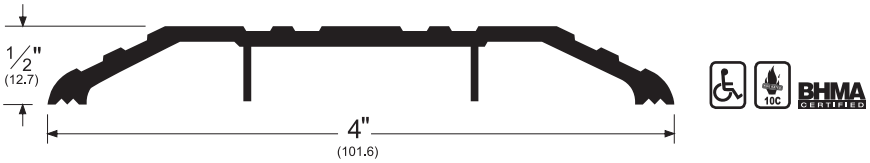

175_

AVAILABLE FINISHES: **10BE, 4E, A, B, BSP, D, WSP**
ANSI (aluminum): **J32300, J32330**
ANSI (brass): **J12300, J12330**

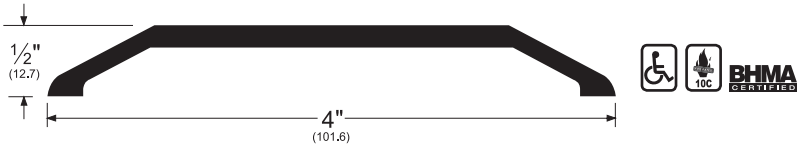

154_

AVAILABLE FINISHES: **10BE, 4E, A, BSP, D, WSP**
ANSI (aluminum): **J32300, J32330**

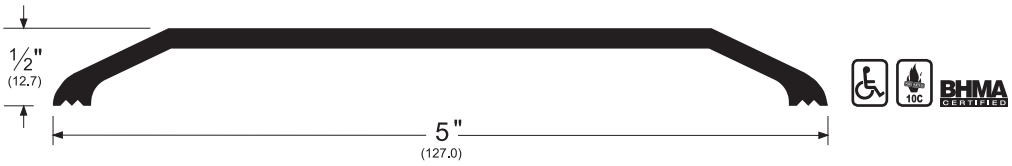

1547_

AVAILABLE FINISHES: **10BE, 4E, A, BSP, WSP**
ANSI (aluminum): **J32300, J32330**

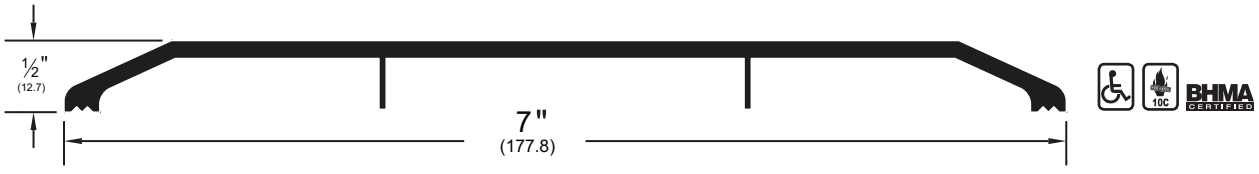

NOTE: Products shown in this section may not be drawn to scale.

AVAILABLE FINISHES FOR PRODUCTS SHOWN ON THIS PAGE
10BE (Satin Bronze Powder Coated Aluminum) **4E** (Translucent Brass Powder Coat) **A** (Mill Finish Aluminum)
B (Mill Finish Extruded Bronze [Brass]) **BSP** (Black Suede Powder Coated Aluminum) **D** (Dark Bronze Anodized)
WSP (White Suede Powder Coated Aluminum)

Copyright © 2015-2025, ASSA ABLOY Accessories and Door Controls Group, Inc., an ASSA ABLOY Group company. All rights reserved. Reproduction in whole or in part without the express written permission of ASSA ABLOY Accessories and Door Controls Group, Inc. is prohibited.

SADDLE THRESHOLDS *(Cont.)*

1710_

AVAILABLE FINISH: **10BE, 4E, A, BSP, WSP**

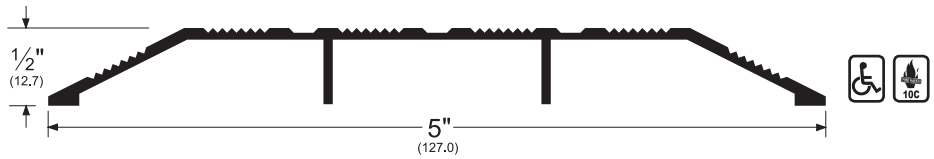

171_

AVAILABLE FINISHES: **10BE, 4E, A, B, BSP, D, G, WSP**
ANSI (aluminum): **J32100, J32130**
ANSI (brass): **J12100, J12130**

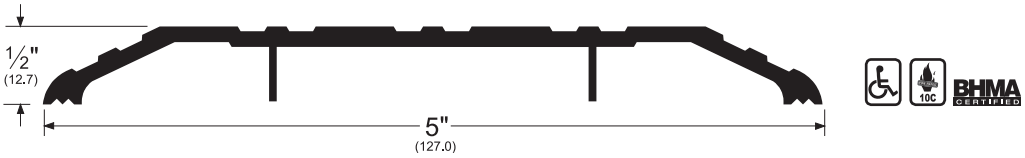

172_

AVAILABLE FINISHES: **10BE, 4E, A, B, BSP, D, WSP**
ANSI (aluminum): **J32100, J32130**
ANSI (brass): **J12100, J12130**

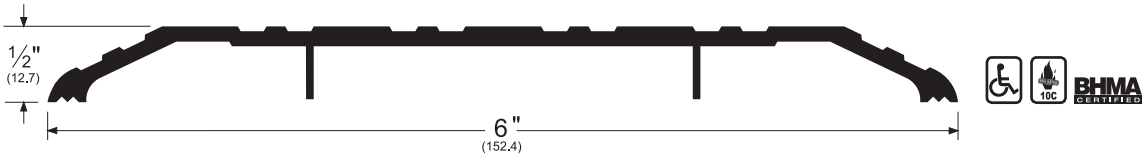

176_

AVAILABLE FINISHES: **10BE, 4E, A, BSP, D, WSP**
ANSI (aluminum): **J32100, J32130, J39100, J39130, J39135, J39150**
ANSI (brass): **J12100, J12130, J19100, J19130, J19135, J19150**

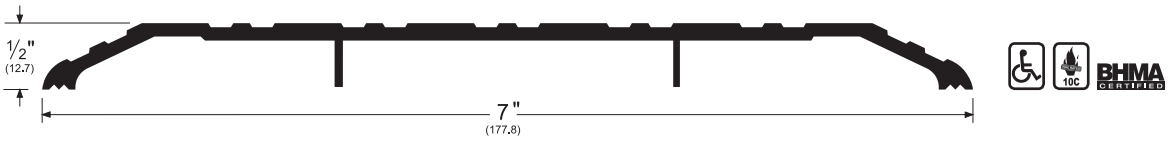

2548_

AVAILABLE FINISHES: **10BE, 4E, A, BSP, D, WSP**
ANSI (aluminum): **J32100, J32130, J39100, J39130, J39135, J39150**

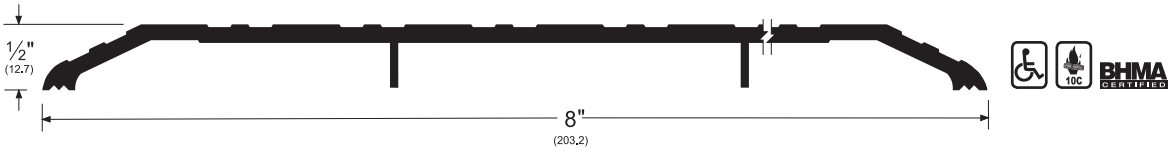

NOTE: Products shown in this section may not be drawn to scale.

AVAILABLE FIN ISHES FOR PRODUCTS SHOWN ON THIS PAGE
10BE (Satin Bronze Powder Coated Aluminum) **4E** (Translucent Brass Powder Coat) **A** (Mill Finish Aluminum)
B (Mill Finish Extruded Bronze [Brass]) **BSP** (Black Suede Powder Coated Aluminum) **D** (Dark Bronze Anodized)
G (Gold Anodized) **WSP** (White Suede Powder Coated Aluminum)

Copyright © 2015-2025, ASSA ABLOY Accessories and Door Controls Group, Inc., an ASSA ABLOY Group company. All rights reserved.
Reproduction in whole or in part without the express written permission of ASSA ABLOY Accessories and Door Controls Group, Inc. is prohibited.

PEMKO
ASSA ABLOY
Experience a safer and more open world

SADDLE THRESHOLDS *(Cont.)*

254x4_

AVAILABLE FINISH: **B**
ANSI (brass): **J12100, J12130, J19100, J19130, J19135, J19150**

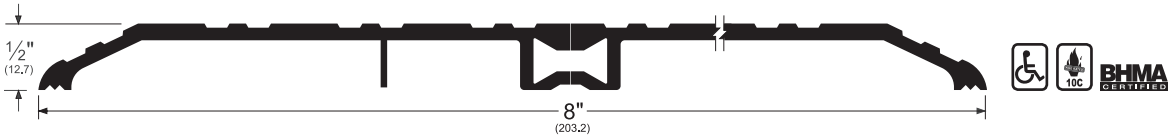

Welded on bottom. Includes two support legs (only one shown due to break in drawing)

2549_

AVAILABLE FINISHES: **10BE, 4E, A, BSP, D, WSP**
ANSI (aluminum): **J32100, J32130**

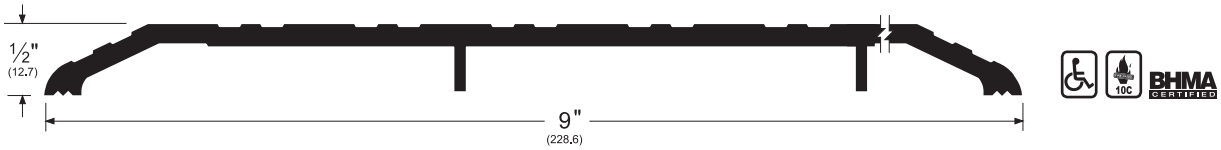

2550_

AVAILABLE FINISHES:**10BE, 4E, A, BSP, D, WSP**
ANSI (aluminum): **J32100, J32130**

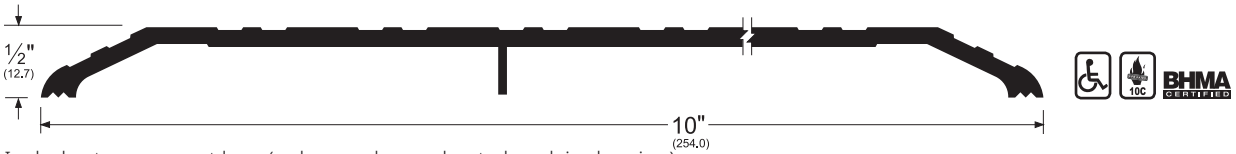

Includes two support legs (only one shown due to break in drawing)

255x5_

AVAILABLE FINISH: **B**
ANSI (brass): **J12100, J12130**



Welded on bottom. Includes two support legs (only one shown due to break in drawing)

256x6_

AVAILABLE FINISHES: **10BE, 4E, A, BSP, D, WSP**
ANSI (aluminum): **J32100, J32130**



Welded on bottom. Includes two support legs (only one shown due to break in drawing)

NOTE: Products shown in this section may not be drawn to scale.

AVAILABLE FINISHES FOR PRODUCTS SHOWN ON THIS PAGE
10BE (Satin Bronze Powder Coated Aluminum) **A** (Mill Finish Aluminum) **B** (Mill Finish Extruded Bronze [Brass])
BSP (Black Suede Powder Coated Aluminum) **D** (Dark Bronze Anodized)
WSP (White Suede Powder Coated Aluminum)

Copyright © 2015-2025, ASSA ABLOY Accessories and Door Controls Group, Inc., an ASSA ABLOY Group company. All rights reserved. Reproduction in whole or in part without the express written permission of ASSA ABLOY Accessories and Door Controls Group, Inc. is prohibited.

HALF SADDLE THRESHOLDS

278_

AVAILABLE FINISHES: **10BE, 4E, A, BSP, D, WSP**
ANSI (aluminum): **J33100, J33130, J33133**

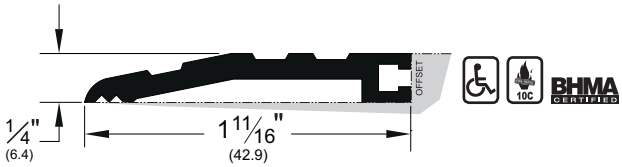

279_

AVAILABLE FINISHES: **10BE, 4E, A, BSP, D, WSP**
ANSI (aluminum): **J33100, J33130, J33133**

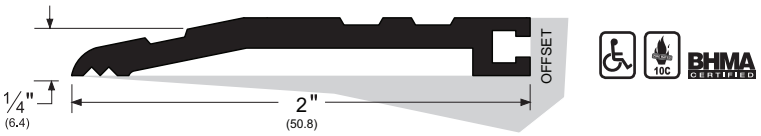

273_

AVAILABLE FINISHES: **10BE, 4E, A, B, BSP, D, WSP**
ANSI (aluminum): **J33100, J33130, J33133**
ANSI (brass): **J13100, J13130, J13133**

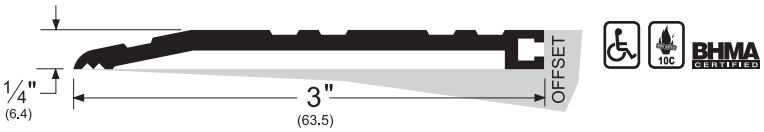

274_

AVAILABLE FINISHES: **10BE, 4E, A, B, BSP, D, WSP**
ANSI (aluminum): **J33100, J33130, J33133**
ANSI (brass): **J13100, J13130, J13133**

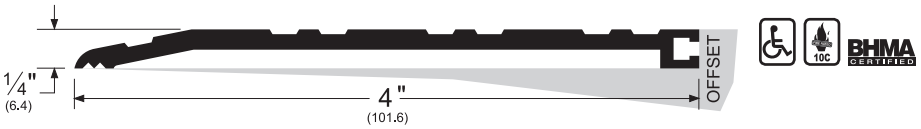

2746_

AVAILABLE FINISHES: **10BE, 4E, A, BSP, D, WSP**
ANSI (aluminum): **J33100, J33130, J33133**



2755_

AVAILABLE FINISHES: **10BE, 4E, A, BSP, D, WSP**
Ratings: **ADA, 10c, BHMA**

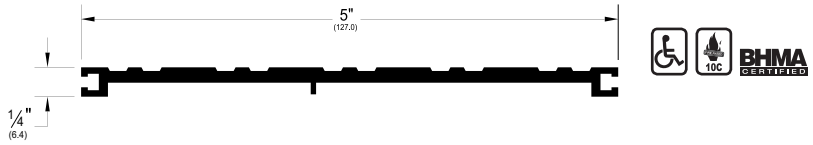

NOTE: Products shown in this section may not be drawn to scale.

AVAILABLE FINISHES FOR PRODUCTS SHOWN ON THIS PAGE
10BE (Satin Bronze Powder Coated Aluminum) **4E** (Translucent Brass Powder Coat) **A** (Mill Finish Aluminum)
B (Mill Finish Extruded Bronze [Brass]) **BSP** (Black Suede Powder Coated Aluminum) **D** (Dark Bronze Anodized)
WSP (White Suede Powder Coated Aluminum)

Copyright © 2015-2025, ASSA ABLOY Accessories and Door Controls Group, Inc., an ASSA ABLOY Group company. All rights reserved.
Reproduction in whole or in part without the express written permission of ASSA ABLOY Accessories and Door Controls Group, Inc. is prohibited.

PEMKO
ASSA ABLOY
Experience a safer and more open world

HALF SADDLE THRESHOLDS *((Cont.)*

252_

AVAILABLE FINISHES: **10BE, 4E, A, B, BSP, D, WSP**
ANSI (aluminum): **J33100, J33130**
ANSI (brass): **J13100, J13130**

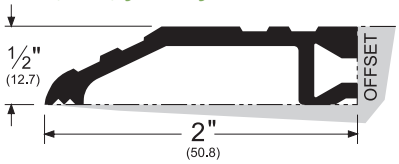

253_

AVAILABLE FINISHES: **10BE, 4E, A, B, BSP, D, WSP**
ANSI (aluminum): **J33100, J33130**
ANSI (brass): **J13100, J13130**

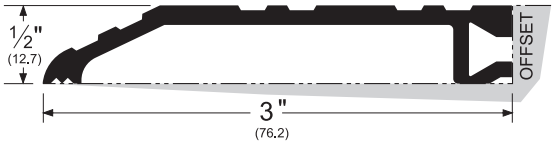

254_

AVAILABLE FINISHES: **10BE, 4E, A, B, BSP, D, G, WSP**
ANSI (aluminum): **J33100, J33130**
ANSI (brass): **J13100, J13130**

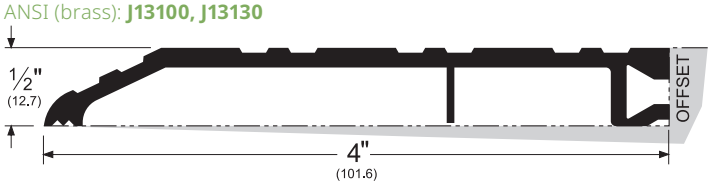

255_

AVAILABLE FINISHES: **10BE, 4E, A, B, BSP, D, G, WSP**
ANSI (aluminum): **J33100, J33130**
ANSI (brass): **J13100, J13130**

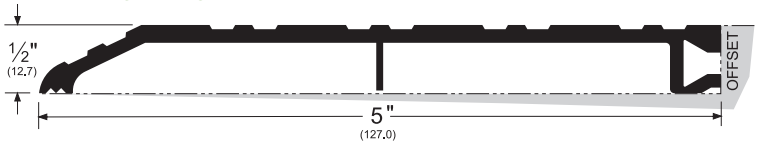

2555_

AVAILABLE FINISHES: **10BE, 4E, A,BSP, D, WSP**
ANSI (aluminum): **J33100**

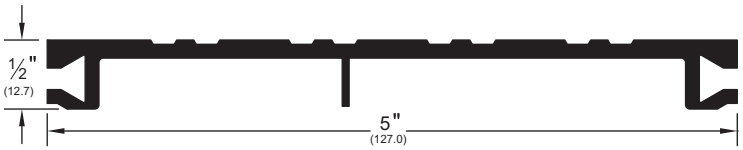

* 2555_ can be combined with other half saddles on one or both sides. If combined only on one side, the opposite side should be mounted flush with an existing offset. Either stated application is required for this to be ADA-compliant.

256_

AVAILABLE FINISHES: **10BE, 4E, A, BSP, D, WSP**
ANSI (aluminum): **J33100, J33130**

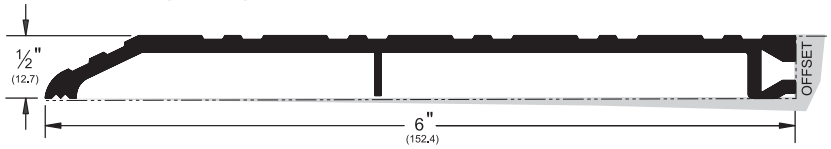

2565_

AVAILABLE FINISHES: **10BE, 4E, A, BSP, D, WSP**
ANSI (aluminum): **J33100, J33130**

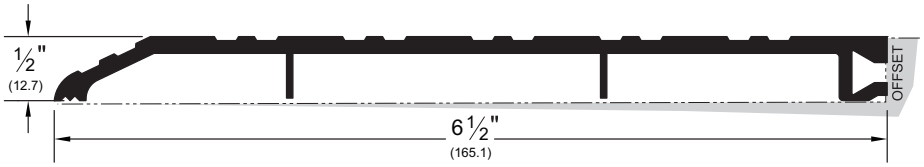

NOTE: Products shown in this section may not be drawn to scale.

AVAILABLE FINISHES FOR PRODUCTS SHOWN ON THIS PAGE
10BE (Satin Bronze Powder Coated Aluminum) **4E** (Translucent Brass Powder Coat) **A** (Mill Finish Aluminum)
B (Mill Finish Extruded Bronze [Brass]) **BSP** (Black Suede Powder Coated Aluminum) **D** (Dark Bronze Anodized)
G (Gold Anodized) **WSP** (White Suede Powder Coated Aluminum)

NOTE: **G** is available with limited inventory

Copyright © 2015-2025, ASSA ABLOY Accessories and Door Controls Group, Inc., an ASSA ABLOY Group company. All rights reserved. Reproduction in whole or in part without the express written permission of ASSA ABLOY Accessories and Door Controls Group, Inc. is prohibited.

OFFSET HALF SADDLES

566_

AVAILABLE FINISHES: **10BE, A, BSP, WSP**

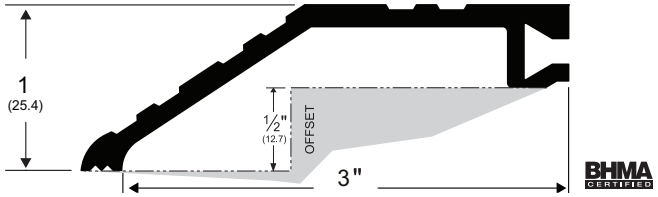

766_

AVAILABLE FINISHES: **10BE, 4E, A, BSP, D, WSP**

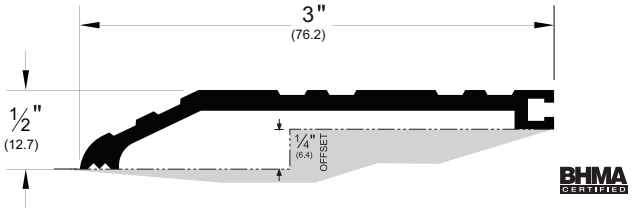

OFFSET SADDLES

158_

AVAILABLE FINISHES: **10BE, 4E, A, BSP, D, WSP**
ANSI (aluminum): **J32100, J32130, J32138, J32180**

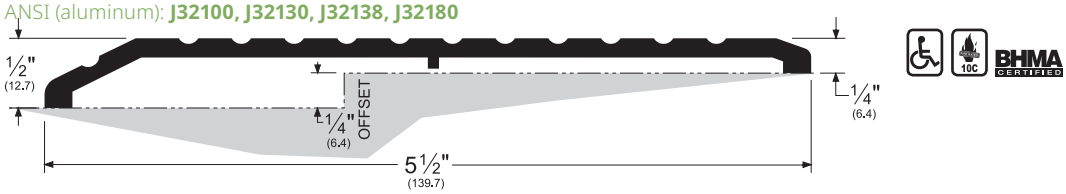

2727_

AVAILABLE FINISHES: **10BE, 4E, A, BSP, D, WSP**
ANSI (aluminum): **J32100, J32130, J32138, J32180**

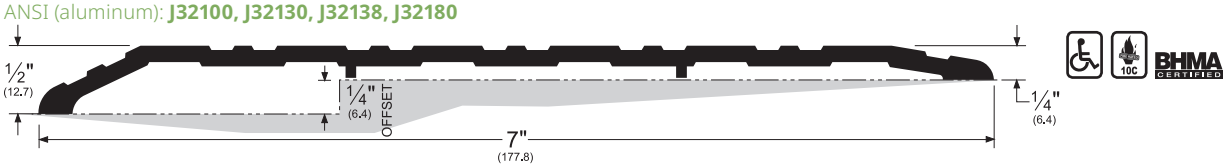

157_

AVAILABLE FINISHES: **10BE, 4E, A, BSP, D, WSP**
ANSI (aluminum): **J32100, J32180, J33100**

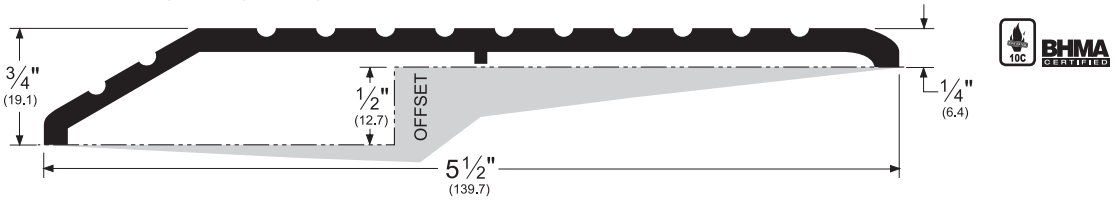

182_

AVAILABLE FINISHES: **10BE, 4E, A, BSP, D, WSP**
ANSI (aluminum): **J32100, J32180, J33100**

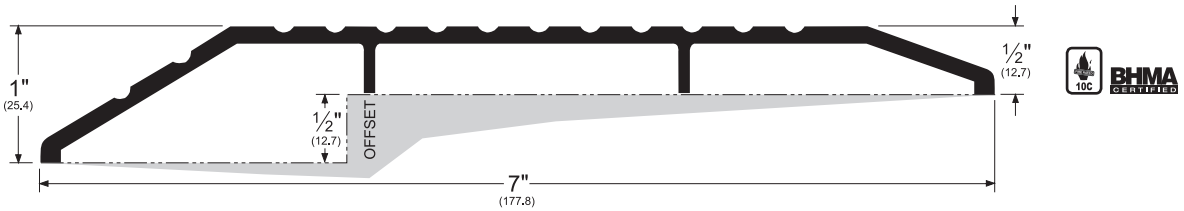

NOTE: Products shown in this section may not be drawn to scale.

AVAILABLE FINISHES FOR PRODUCTS SHOWN ON THIS PAGE
10BE (Satin Bronze Powder Coated Aluminum) **4E** (Translucent Brass Powder Coat) **A** (Mill Finish Aluminum)
BSP (Black Suede Powder Coated Aluminum) **D** (Dark Bronze Anodized) **WSP** (White Suede Powder Coated Aluminum)

Copyright © 2015-2025, ASSA ABLOY Accessories and Door Controls Group, Inc., an ASSA ABLOY Group company. All rights reserved.
Reproduction in whole or in part without the express written permission of ASSA ABLOY Accessories and Door Controls Group, Inc. is prohibited.

PEMKO
ASSA ABLOY
Experience a safer and more open world

STAINLESS STEEL SADDLES

154SS_

AVAILABLE FINISH: **SS (#4, Brushed Finish)**
ANSI: **J52300, J52330**

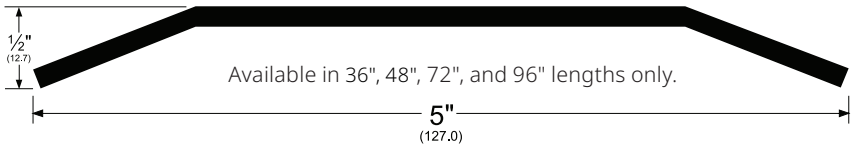

175SS_

AVAILABLE FINISH: **SS (#4, Brushed Finish)**
ANSI: **J52300, J52330**

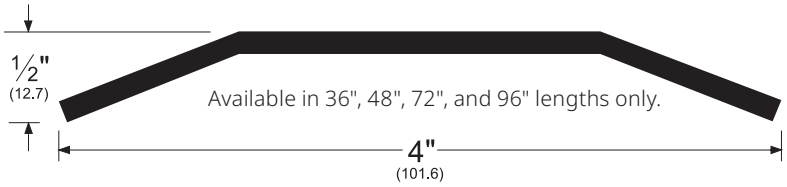

NOTE: Products shown in this section may not be drawn to scale.

AVAILABLE FINISHES FOR PRODUCTS SHOWN ON THIS PAGE
SS (#4, Brushed Finish)

Copyright © 2015-2025, ASSA ABLOY Accessories and Door Controls Group, Inc., an ASSA ABLOY Group company. All rights reserved. Reproduction in whole or in part without the express written permission of ASSA ABLOY Accessories and Door Controls Group, Inc. is prohibited.

THERMAL BREAK SADDLES

- Black rigid polypropylene key between extrusions provides a thermal break (designated by "FG" Frost Guard following finish code)

273x3_FG

AVAILABLE FINISHES: **10BE, 4E, A, B, BSP, D, WSP**
ANSI (aluminum): **J32139, J32190, J32193**
ANSI (brass): **J12139, J12190, J12193**

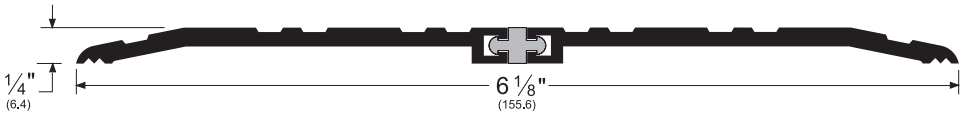

273x4_FG

AVAILABLE FINISHES: **10BE, 4E, A, B, BSP, D, WSP**
ANSI (aluminum): **J32139, J32190, J32193**
ANSI (brass): **J12139, J12190, J12193**

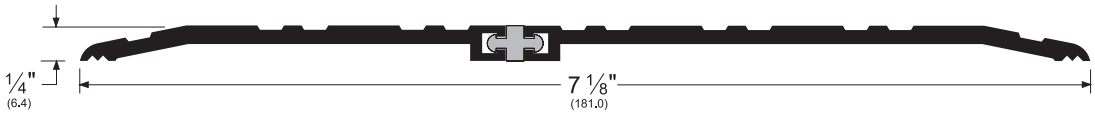

274x4_FG

AVAILABLE FINISHES: **10BE, 4E, A, B, BSP, D, WSP**
ANSI (aluminum): **J32139, J32190, J32193**
ANSI (brass): **J12139, J12190, J12193**



2746x6_FG

AVAILABLE FINISHES: **10BE, 4E, A, BSP, D, WSP**
ANSI (aluminum): **J32139, J32190, J32193**



256x6_FG

AVAILABLE FINISHES: **10BE, 4E, A, BSP, D, WSP**
ANSI (aluminum): **J32139, J32190, J32193**

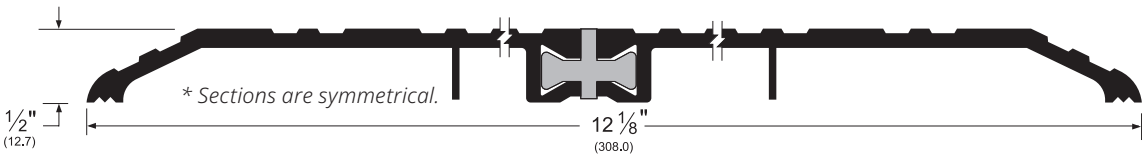

NOTE: Products shown in this section may not be drawn to scale.

AVAILABLE FINISHES FOR PRODUCTS SHOWN ON THIS PAGE
10BE (Satin Bronze Powder Coated Aluminum) **4E** (Translucent Brass Powder Coat) **A** (Mill Finish Aluminum)
B (Mill Finish Extruded Bronze [Brass]) **BSP** (Black Suede Powder Coated Aluminum) **D** (Dark Bronze Anodized)
WSP (White Suede Powder Coated Aluminum)

Copyright © 2015-2025, ASSA ABLOY Accessories and Door Controls Group, Inc., an ASSA ABLOY Group company. All rights reserved.
Reproduction in whole or in part without the express written permission of ASSA ABLOY Accessories and Door Controls Group, Inc. is prohibited.

PEMKO
ASSA ABLOY
Experience a safer and more open world

THERMAL BREAK SADDLES *(Cont.)*

255x5_FG

AVAILABLE FINISHES: **10BE, A, B, BSP, D, WSP**
ANSI (aluminum): **J32139, J32190, J32193**
ANSI (brass): **J12139, J12190, J12193**

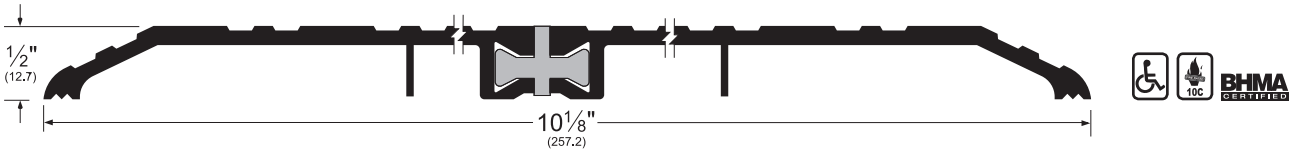

252x2_FG

AVAILABLE FINISHES: **10BE, 4E, A, B, BSP, D, WSP**
ANSI (aluminum): **J32139, J32190, J32193**
ANSI (brass): **J12139, J12190, J12193**

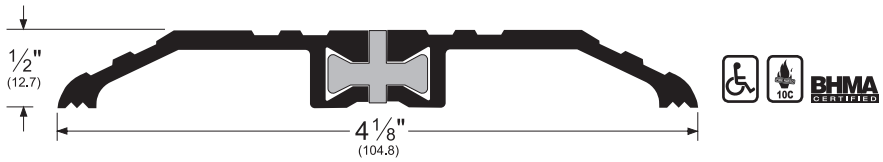

252x3_FG

AVAILABLE FINISHES: **10BE, 4E, A, B, BSP, D, WSP**
ANSI (aluminum): **J32139, J32190, J32193**
ANSI (brass): **J12139, J12190, J12193**

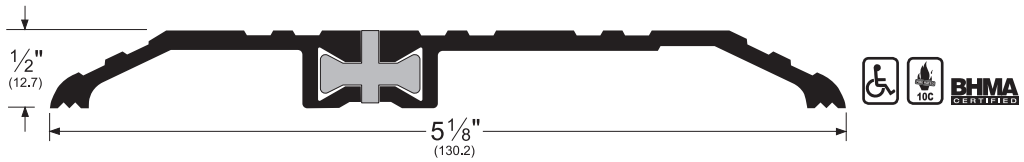

253x3_FG

AVAILABLE FINISHES: **10BE, 4E, A, B, BSP, D, WSP**
ANSI (aluminum): **J32139, J32190, J32193**
ANSI (brass): **J12139, J12190, J12193**

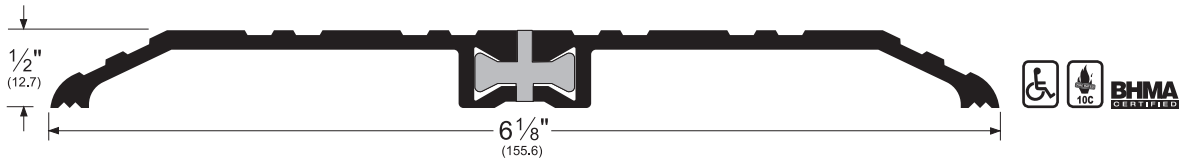

253x4_FG

AVAILABLE FINISHES: **10BE, 4E, A, B, BSP, D, WSP**
ANSI (aluminum): **J32139, J32190, J32193**
ANSI (brass): **J12139, J12190, J12193**

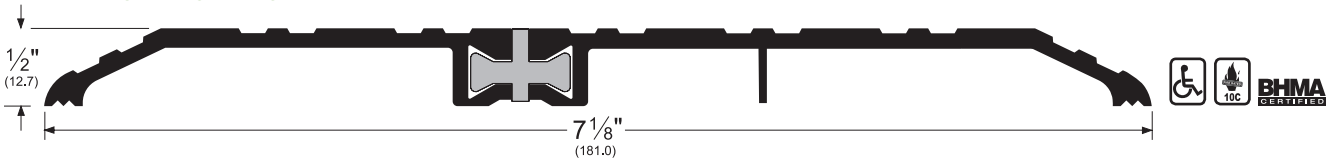

NOTE: Products shown in this section may not be drawn to scale.

AVAILABLE FINISHES FOR PRODUCTS SHOWN ON THIS PAGE
10BE (Satin Bronze Powder Coated Aluminum) **4E** (Translucent Brass Powder Coat) **A** (Mill Finish Aluminum)
B (Mill Finish Extruded Bronze [Brass]) **BSP** (Black Suede Powder Coated Aluminum) **D** (Dark Bronze Anodized)
WSP (White Suede Powder Coated Aluminum)

Copyright © 2015-2025, ASSA ABLOY Accessories and Door Controls Group, Inc., an ASSA ABLOY Group company. All rights reserved. Reproduction in whole or in part without the express written permission of ASSA ABLOY Accessories and Door Controls Group, Inc. is prohibited.

THERMAL BREAK SADDLES *(Cont.)*

253x6_FG

AVAILABLE FINISHES: **10BE, 4E, A, BSP, D, WSP**
ANSI (aluminum): **J32139, J32190, J32193**

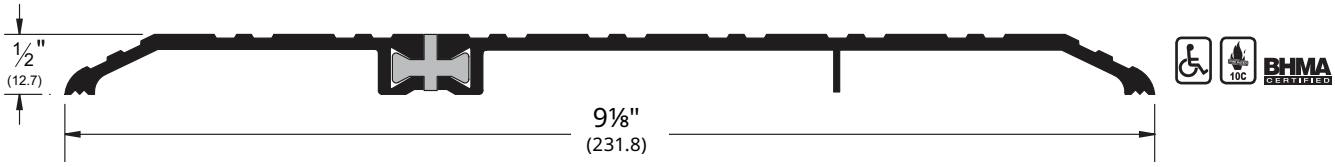

254x4_FG

AVAILABLE FINISHES: **10BE, 4E, A, B, BSP, D, WSP**
ANSI (aluminum): **J32139, J32190, J32193**
ANSI (brass): **J12139, J12190, J12193**

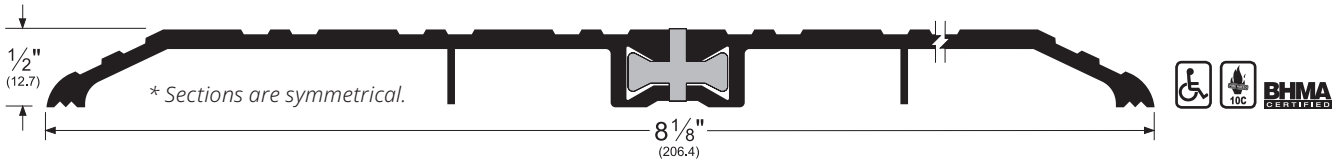

254x5_FG

AVAILABLE FINISHES: **10BE, 4E, A, B, BSP, D, WSP**
ANSI (aluminum): **J32139, J32190, J32193**
ANSI (brass): **J12139, J12190, J12193**

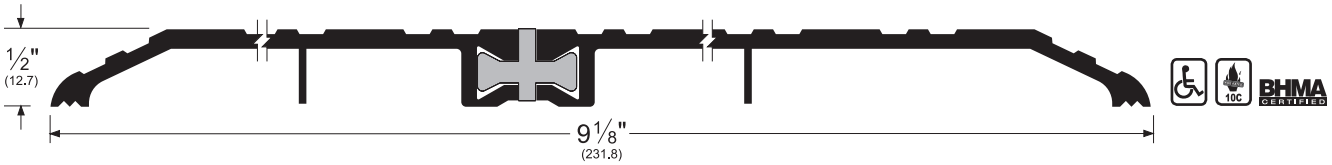

** Sections are symmetrical.*

766x5_FG

AVAILABLE FINISHES: **10BE, 4E, A, BSP, D, WSP**
ANSI (aluminum): **J32139, J32190, J32193 ,J32189, J32180**
ANSI (brass): **J12139, J12190, J12193, J12189, J12180**

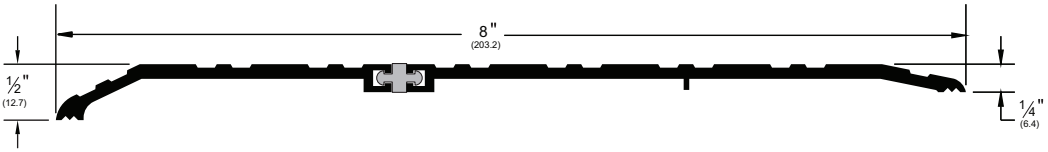

566x3_FG

AVAILABLE FINISHES: **10BE, A, BSP, WSP**
ANSI (aluminum): **J32189, J32190, J32180**

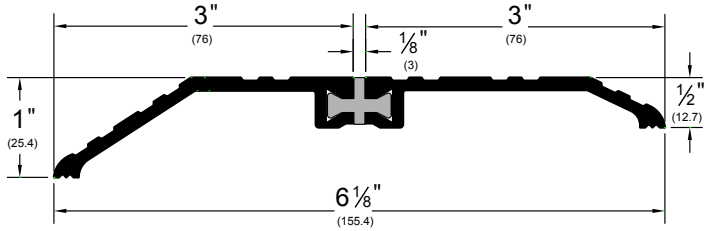

NOTE: Products shown in this section may not be drawn to scale.

AVAILABLE FINISHES FOR PRODUCTS SHOWN ON THIS PAGE
10BE (Satin Bronze Powder Coated Aluminum) **4E** (Translucent Brass Powder Coat) **A** (Mill Finish Aluminum)
B (Mill Finish Extruded Bronze [Brass]) **BSP** (Black Suede Powder Coated Aluminum) **D** (Dark Bronze Anodized)
WSP (White Suede Powder Coated Aluminum)

Copyright © 2015-2025, ASSA ABLOY Accessories and Door Controls Group, Inc., an ASSA ABLOY Group company. All rights reserved.
Reproduction in whole or in part without the express written permission of ASSA ABLOY Accessories and Door Controls Group, Inc. is prohibited.

PEMKO
ASSA ABLOY
Experience a safer and more open world

STAINLESS STEEL THERMAL BREAK THRESHOLD

- Black rigid polypropylene key between extrusions provides a thermal barrier (designated by "FG" Frost Guard following finish code)
- Available in 36", 48", 72", and 96" lengths only

252x2SSFG

AVAILABLE FINISH: **SS (#4, Brushed Finish)**
ANSI: **J52330, J52339, J52390, J52393**

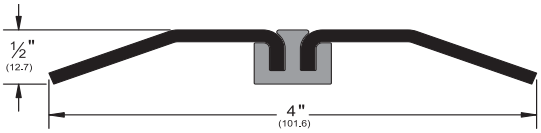

252x3SSFG

AVAILABLE FINISH: **SS (#4, Brushed Finish)**
ANSI: **J52330, J52339, J52390, J52393**

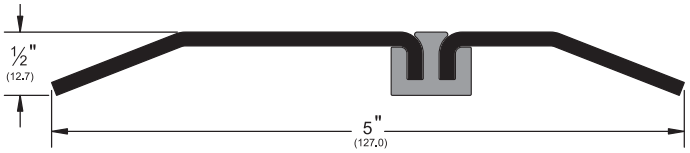

252x4SSFG

AVAILABLE FINISH: **SS (#4, Brushed Finish)**
ANSI: **J52330, J52339, J52390, J52393**

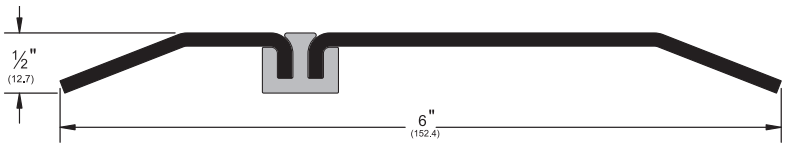

253x3SSFG

AVAILABLE FINISH: **SS (#4, Brushed Finish)**
ANSI: **J52330, J52339, J52390, J52393**

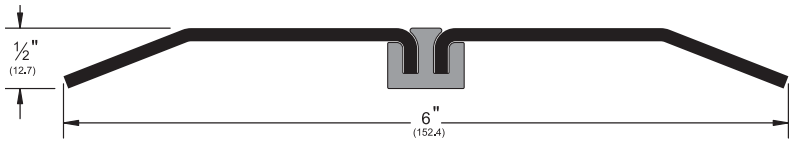

253x4SSFG

AVAILABLE FINISH: **SS (#4, Brushed Finish)**
ANSI: **J52330, J52339, J52390, J52393**

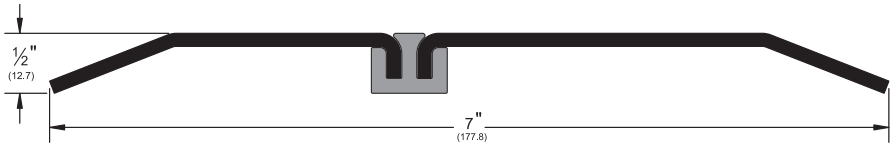

254x4SSFG

AVAILABLE FINISH: **SS (#4, Brushed Finish)**
ANSI: **J52330, J52339, J52390, J52393**

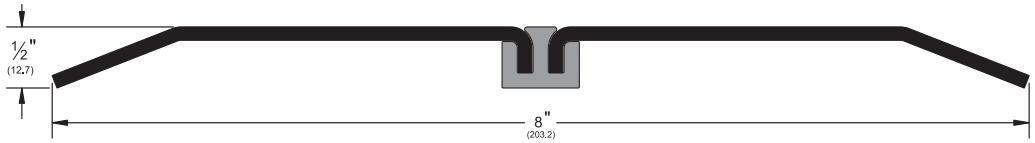

NOTE: Products shown in this section may not be drawn to scale.

AVAILABLE FINISHES FOR PRODUCTS SHOWN ON THIS PAGE
SS (See Individual Part)

Copyright © 2015-2025, ASSA ABLOY Accessories and Door Controls Group, Inc., an ASSA ABLOY Group company. All rights reserved. Reproduction in whole or in part without the express written permission of ASSA ABLOY Accessories and Door Controls Group, Inc. is prohibited.

LATCHING PANIC EXIT SADDLES

- Used in conjunction with surface applied vertical rod exit device, or as a stop and a seal at the bottom of door
- For offset applications, use an elevator (see page 131)
- **2006_T** is only ADA compliant when installed butted to 1/4" tile or other floor material

2001_T

AVAILABLE FINISHES: **10BE, A, BSP, D, WSP**
REPLACEMENT INSERT: **T5 (BL)**

- Allow 1/4" door clearance
- Special purpose bumper threshold designed for use with a low 1/4" to 3/8" undercut door.

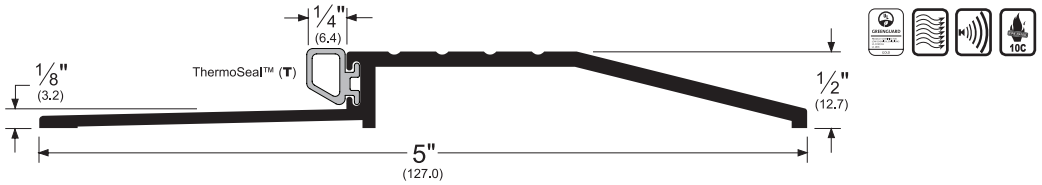

2005_T

AVAILABLE FINISH: **10BE, A, B, BSP, D, WSP**
REPLACEMENT INSERT: **T5 (BL)**
ANSI (aluminum): **J35100, J35130, J36100, J36130**
ANSI (brass): **J15100, J15130, J16100, J16130**
Allow 3/8" door clearance

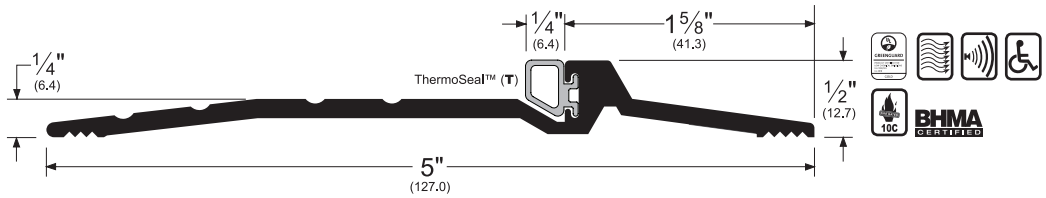

2006_T

AVAILABLE FINISH: **10BE, A, BSP, D, WSP**
REPLACEMENT INSERT: **T5 (BL)**
ANSI (aluminum): **J35100, J35130, J36100, J36130**
Allow 3/8" door clearance

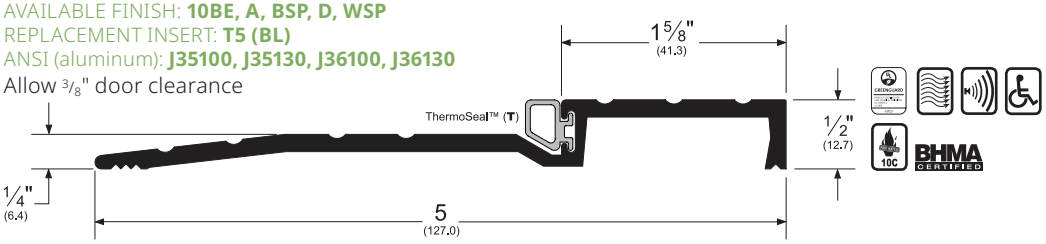

Alternate Inserts

pile (**P**)

2001_P
2005_P
2006_P

REPLACEMENT INSERT:
P2 (BL, W)

Eco-V™(**V**)

2001_V
2005_V
2006_V

REPLACEMENT INSERT:
EV41 (BL, GR, W)

NOTE: Products shown in this section may not be drawn to scale.

AVAILABLE FINISHES FOR PRODUCTS SHOWN ON THIS PAGE
10BE (Satin Bronze Powder Coated Aluminum) **A** (Mill Finish Aluminum) **B** (Mill Finish Extruded Bronze [Brass])
BSP (Black Suede Powder Coated Aluminum) **D** (Dark Bronze Anodized)
WSP (White Suede Powder Coated Aluminum)

Copyright © 2015-2025, ASSA ABLOY Accessories and Door Controls Group, Inc., an ASSA ABLOY Group company. All rights reserved.
Reproduction in whole or in part without the express written permission of ASSA ABLOY Accessories and Door Controls Group, Inc. is prohibited.

PEMKO
ASSA ABLOY
Experience a safer and more open world

LATCHING PANIC EXIT SADDLES *(Cont.)*

2009_PK

AVAILABLE FINISHES: **10BE, A, BSP, D, WSP**
REPLACEMENT INSERT: **PK20 (BL)**
ANSI: **J36100, J36130**
Allow 3/8" door clearance

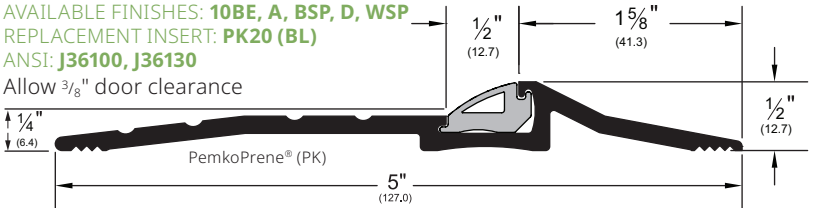

U.S. Patent No. 9,920,567

2010_PK

AVAILABLE FINISHES: **10BE, A, BSP, D, WSP**
REPLACEMENT INSERT: **PK20 (BL)**
ANSI: **J36100, J36130**
Allow 3/8" door clearance

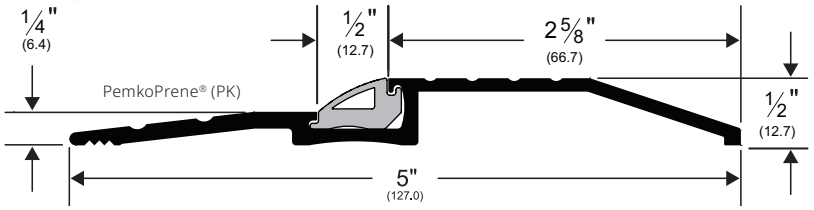

179_T

AVAILABLE FINISHES: **10BE, A, BSP, D, WSP**
REPLACEMENT INSERT: **T5 (BL)**
ANSI (aluminum): **J35100, J36100**
Allow 1/2" door clearance

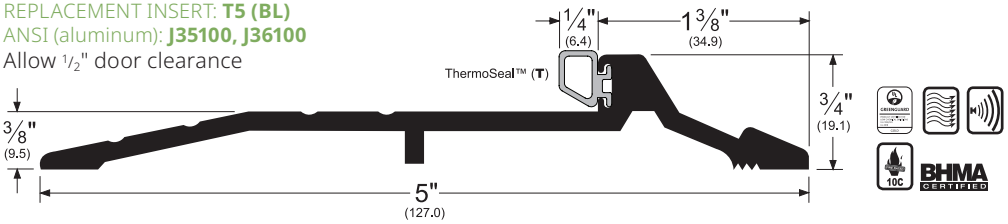

277_S

AVAILABLE FINISHES: **10BE, A, BSP, D, WSP**
REPLACEMENT INSERT: **SR6 (BL)**
ANSI (aluminum): **J35100, J36100**
Allow 5/8" door clearance

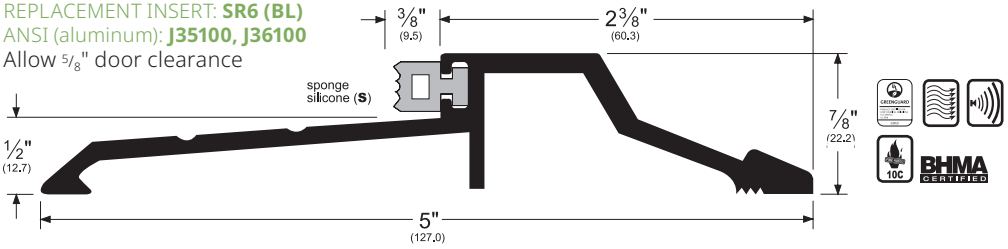

Alternate Inserts

pile (**P**)

179_P

REPLACEMENT INSERT:
P2 (BL, W)

Eco-V™ (**V**)

179_V

REPLACEMENT INSERT:
EV41 (BL, GR, W)

Alternate Inserts

sponge
EPDM (**R**)

277_R

REPLACEMENT INSERT:
E7 (BL)
ANSI (aluminum):
J36100

NOTE: Products shown in this section may not be drawn to scale.

AVAILABLE FINISHES FOR PRODUCTS SHOWN ON THIS PAGE
10BE (Satin Bronze Powder Coated Aluminum) **A** (Mill Finish Aluminum) **BSP** (Black Suede Powder Coated Aluminum)
D (Dark Bronze Anodized) **WSP** (White Suede Powder Coated Aluminum)

PEMKO
ASSA ABLOY
Experience a safer and more open world

800-824-3018 | www.pemko.com
Check the web site for the up-to-date catalog

Copyright © 2015-2025, ASSA ABLOY Accessories and Door Controls Group, Inc., an ASSA ABLOY Group company. All rights reserved. Reproduction in whole or in part without the express written permission of ASSA ABLOY Accessories and Door Controls Group, Inc. is prohibited.

LATCHING PANIC EXIT SADDLES *(Cont.)*

159_T

AVAILABLE FINISHES: **10BE, A, B, BSP, D, WSP**
REPLACEMENT INSERT: **T5 (BL)**
ANSI (aluminum): **J35300, J36300**
ANSI (brass): **J15300, J16300**

- Allow 9/16" door clearance
- Provided with "J" hook.
- Can also be used as an interlock threshold (see Residential Thresholds section)

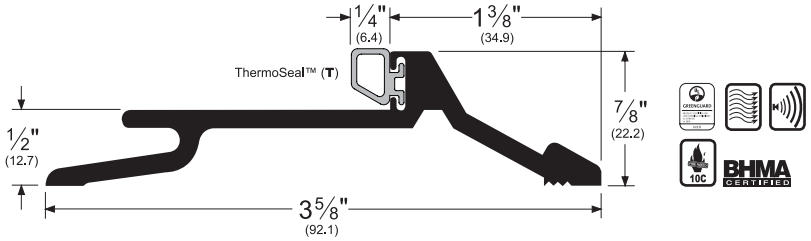

177_T

AVAILABLE FINISHES: **10BE, A, B, BSP, D, WSP**
REPLACEMENT INSERT: **T5 (BL)**
ANSI (aluminum): **J35100, J36100**
ANSI (brass): **J15100, J16100**
Allow 5/8" door clearance

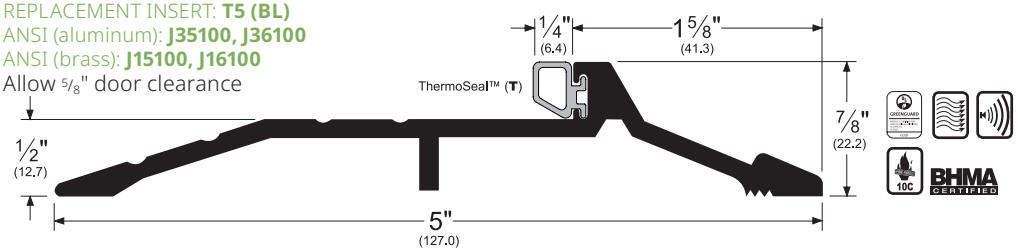

1855_T

AVAILABLE FINISHES: **10BE, A, BSP, WSP**
REPLACEMENT INSERT: **T5 (BL)**
ANSI (aluminum): **J35100, J36100**
Allow 5/8" door clearance

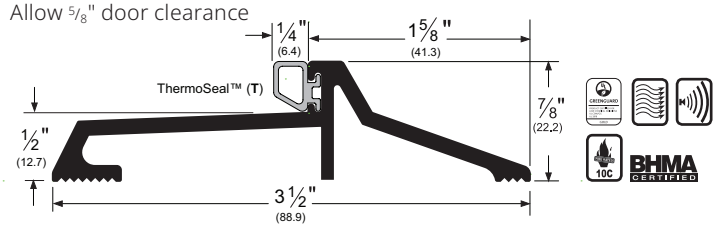

181_T

AVAILABLE FINISHES: **10BE, A, BSP, D, WSP**
REPLACEMENT INSERT: **T5 (BL)**
ANSI (aluminum): **J35100, J36100**
Allow 3/4" door clearance

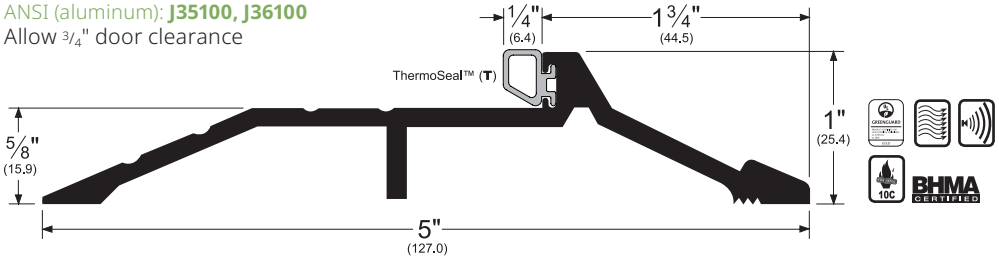

Alternate Inserts

pile (**P**)

159_P
177_P
1855_P
181_P

REPLACEMENT INSERT:
P2 (BL, W)

Eco-V™ (**V**)

159_V
177_V
1855_V
181_V

REPLACEMENT INSERT:
EV41 (BL, GR, W)

NOTE: Products shown in this section may not be drawn to scale.

AVAILABLE FINISHES FOR PRODUCTS SHOWN ON THIS PAGE
10BE (Satin Bronze Powder Coated Aluminum) **A** (Mill Finish Aluminum) **B** (Mill Finish Extruded Bronze [Brass])
BSP (Black Suede Powder Coated Aluminum) **D** (Dark Bronze Anodized) **WSP** (White Suede Powder Coated Aluminum)

Copyright © 2015-2025, ASSA ABLOY Accessories and Door Controls Group, Inc., an ASSA ABLOY Group company. All rights reserved.
Reproduction in whole or in part without the express written permission of ASSA ABLOY Accessories and Door Controls Group, Inc. is prohibited.

PEMKO
ASSA ABLOY
Experience a safer and more open world

LATCHING PANIC EXIT SADDLES *(Cont.)*

185_T

AVAILABLE FINISHES: **10BE, A, BSP, WSP**
REPLACEMENT INSERT: **T5 (BL)**
ANSI (aluminum): **J35300, J36300**
Allow 3/4" door clearance

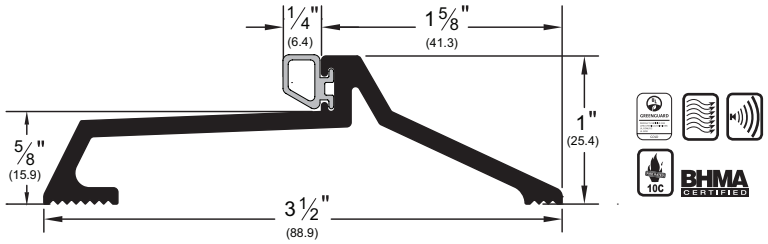

252x226_T

AVAILABLE FINISHES: **10BE, A, B, BSP, D, WSP**
REPLACEMENT INSERT: **T5 (BL)**
ANSI (aluminum): **J35100, J16100**
ANSI (brass): **J15100, J16100**
Allow 5/8" door clearance

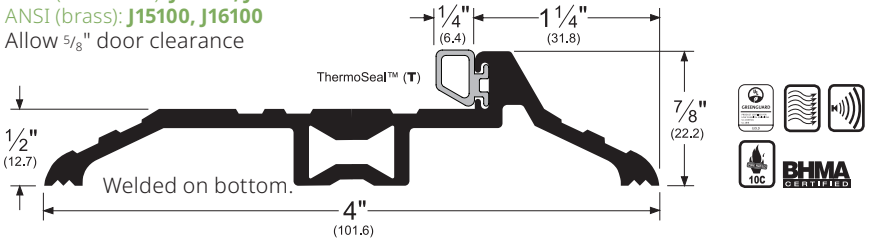

254x226_T

AVAILABLE FINISHES: **10BE, A, B, BSP, D, WSP**
REPLACEMENT INSERT: **T5 (BL)**
ANSI (aluminum): **J35100, J16100**
ANSI (brass): **J15100, J16100**
Allow 5/8" door clearance

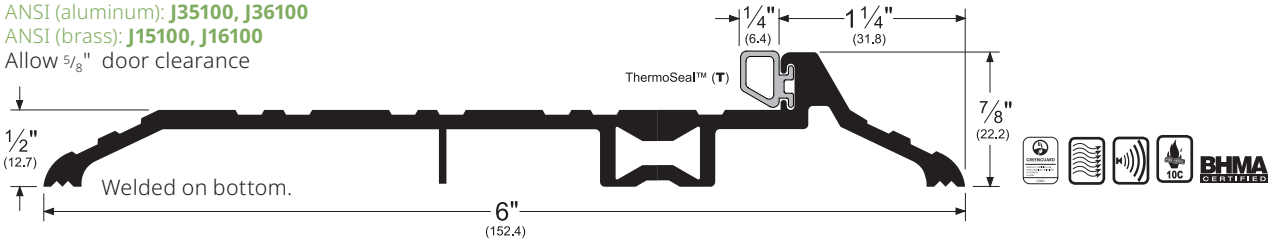

255x226_T

AVAILABLE FINISHES: **10BE, A, B, BSP, D, WSP**
REPLACEMENT INSERT: **T5 (BL)**
ANSI (aluminum): **J35100, J16100**
ANSI (brass): **J15100, J16100**
Allow 5/8" door clearance

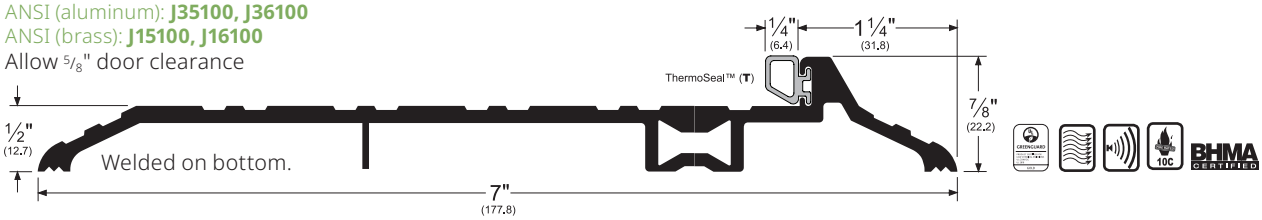

Alternate Inserts

pile (**P**)

185_P
252x226_P
254x226_P
255x226_P

REPLACEMENT INSERT:
P2 (BL, W)

Eco-V™(**V**)

185_V
252x226_V
254x226_V
255x226_V

REPLACEMENT INSERT:
EV41 (BL, GR, W)

NOTE: Products shown in this section may not be drawn to scale.

AVAILABLE FINISHES FOR PRODUCTS SHOWN ON THIS PAGE
10BE (Satin Bronze Powder Coated Aluminum) **A** (Mill Finish Aluminum) **B** (Mill Finish Extruded Bronze [Brass])
BSP (Black Suede Powder Coated Aluminum) **D** (Dark Bronze Anodized) **WSP** (White Suede Powder Coated Aluminum)

Copyright © 2015-2025, ASSA ABLOY Accessories and Door Controls Group, Inc., an ASSA ABLOY Group company. All rights reserved. Reproduction in whole or in part without the express written permission of ASSA ABLOY Accessories and Door Controls Group, Inc. is prohibited.

LATCHING PANIC EXIT SADDLES - THERMAL BREAK

- Black rigid polypropylene key between extrusions provides thermal break (designated by "FG" Frost Guard following finish code)
- Used in conjunction with surface applied vertical rod exit device, or as a stop and a seal at the bottom of door
- These units are not welded

252x226_FGT

AVAILABLE FINISHES: **10BE, A, B, BSP, D, WSP**
REPLACEMENT INSERT: **T5 (BL)**
ANSI (aluminum): **J35190, J36190**
ANSI (brass): **J15190, J16190**
Allow 5/8" door clearance

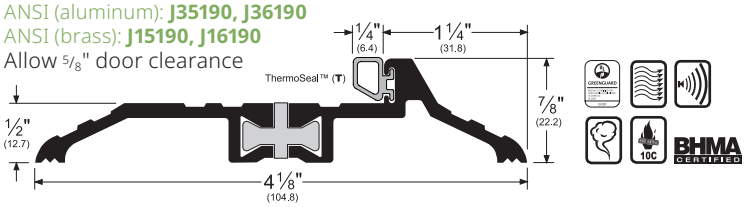

253x226_FGT

AVAILABLE FINISHES: **10BE, A, B, BSP, D, WSP**
REPLACEMENT INSERT: **T5 (BL)**
ANSI (aluminum): **J35190, J36190**
ANSI (brass): **J15190, J16190**
Allow 5/8" door clearance

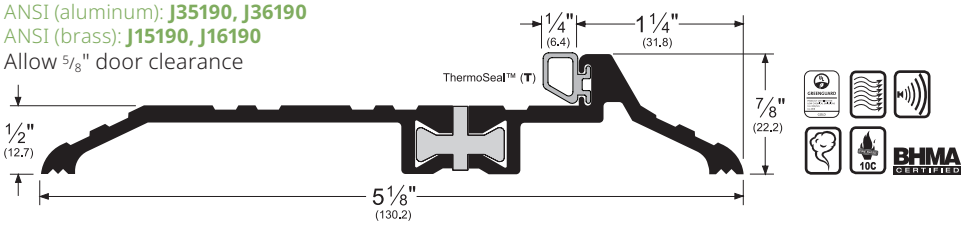

254x226_FGT

AVAILABLE FINISHES: **10BE, A, B, BSP, D, WSP**
REPLACEMENT INSERT: **T5 (BL)**
ANSI (aluminum): **J35190, J36190**
ANSI (brass): **J15190, J16190**
Allow 5/8" door clearance

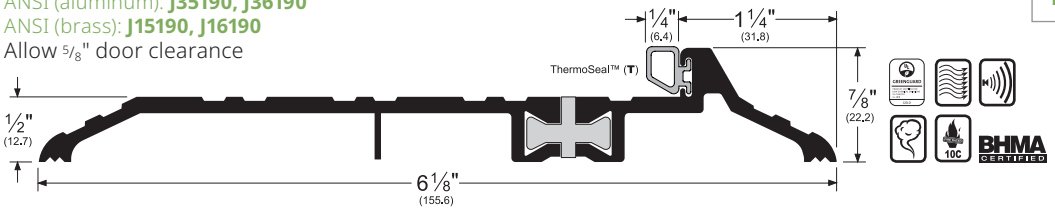

255x226_FGT

AVAILABLE FINISHES: **10BE, A, B, BSP, D, WSP**
REPLACEMENT INSERT: **T5 (BL)**
ANSI (aluminum): **J35190, J36190**
ANSI (brass): **J15190, J16190**
Allow 5/8" door clearance

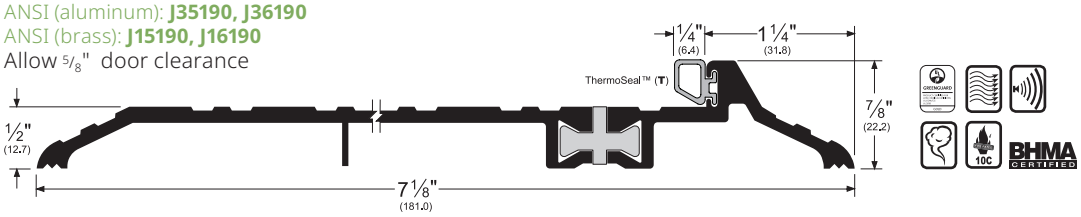

Alternate Inserts

pile (**P**)

252x226_FGP
253x226_FGP
254x226_FGP
255x226_FGP
273x224_FGP

REPLACEMENT INSERT:
P2 (BL, W)

Eco-V™(**V**)

252x226_FGV
253x226_FGV
254x226_FGV
255x226_FGV
273x224_FGV

REPLACEMENT INSERT:
EV41 (BL, GR, W)

NOTE: Products shown in this section may not be drawn to scale.

AVAILABLE FINISHES FOR PRODUCTS SHOWN ON THIS PAGE
10BE (Satin Bronze Powder Coated Aluminum) **A** (Mill Finish Aluminum) **B** (Mill Finish Extruded Bronze [Brass])
BSP (Black Suede Powder Coated Aluminum) **D** (Dark Bronze Anodized) **WSP** (White Suede Powder Coated Aluminum)

Copyright © 2015-2025, ASSA ABLOY Accessories and Door Controls Group, Inc., an ASSA ABLOY Group company. All rights reserved.
Reproduction in whole or in part without the express written permission of ASSA ABLOY Accessories and Door Controls Group, Inc. is prohibited.

PEMKO
ASSA ABLOY
Experience a safer and more open world

LATCHING PANIC EXIT SADDLES - THERMAL BREAK *(Cont.)*

- Allow 3/8" door clearance

273x224_FGT

AVAILABLE FINISHES: **10BE, A, BSP, D, WSP**
REPLACEMENT INSERT: **T5 (BL)**
ANSI (aluminum): **J36130, J36139, J36190, J36193**

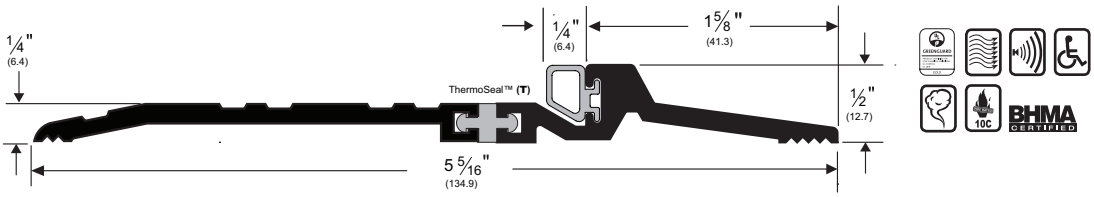

278x224_FGT

AVAILABLE FINISHES: **10BE, A, BSP, D, WSP**
REPLACEMENT INSERT: **T5 (BL)**
ANSI (aluminum): **J36130, J36139, J36190, J36193**

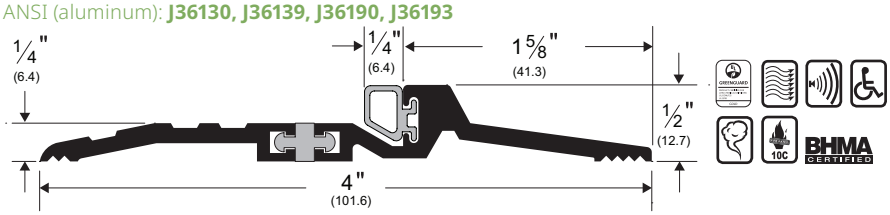

279x224_FGT

AVAILABLE FINISHES: **10BE, A, BSP, D, WSP**
REPLACEMENT INSERT: **T5 (BL)**
ANSI (aluminum): **J36130, J36139, J36190, J36193**

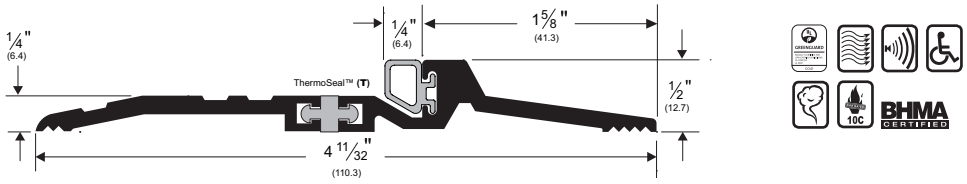

274x224_FGT

AVAILABLE FINISHES: **10BE, A, BSP, D, WSP**
REPLACEMENT INSERT: **T5 (BL)**
ANSI (aluminum): **J36130, J36139, J36190, J36193**

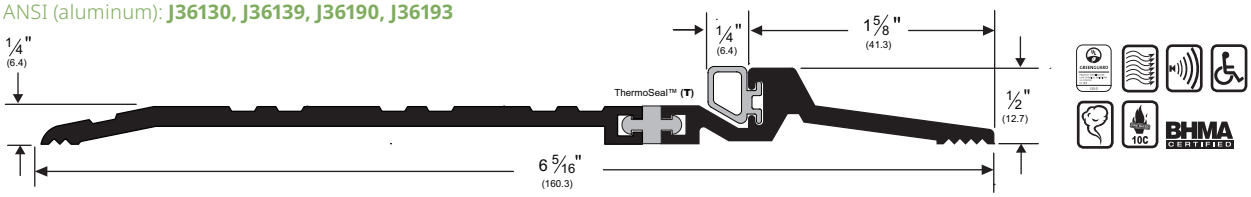

Alternate Inserts



pile (**P**)

273x224_FGP
274x224_FGP
278x224_FGP
279x224_FGP

REPLACEMENT INSERT:
P2 (BL, W)



Eco-V™(**V**)

273x224_FGV
274x224_FGV
278x224_FGV
279x224_FGV

REPLACEMENT INSERT:
EV41 (BL, GR, W)

NOTE: Products shown in this section may not be drawn to scale.

AVAILABLE FINISHES FOR PRODUCTS SHOWN ON THIS PAGE
10BE (Satin Bronze Powder Coated Aluminum) **A** (Mill Finish Aluminum) **BSP** (Black Suede Powder Coated Aluminum)
D (Dark Bronze Anodized) **WSP** (White Suede Powder Coated Aluminum)

PEMKO
ASSA ABLOY
Experience a safer and more open world

800-824-3018 | www.pemko.com
Check the web site for the up-to-date catalog

Copyright © 2015-2025, ASSA ABLOY Accessories and Door Controls Group, Inc., an ASSA ABLOY Group company. All rights reserved. Reproduction in whole or in part without the express written permission of ASSA ABLOY Accessories and Door Controls Group, Inc. is prohibited.

LATCHING PANIC EXIT SADDLES - THERMAL BREAK *(Cont.)*

- Allow 3/8" door clearance

278x292_FGPK

AVAILABLE FINISHES: **10BE, A, BSP, D, WSP**
REPLACEMENT INSERT: **PK20 (BL)**
ANSI (aluminum): **J35190, J35193, J36190, J36193**

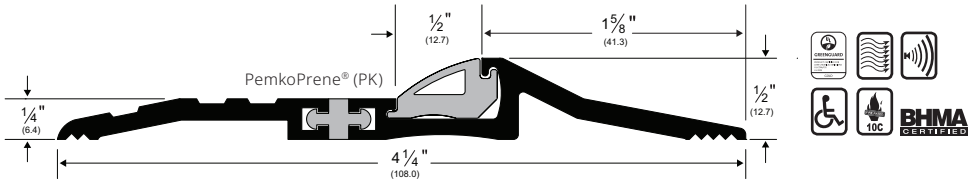

279x292_FGPK

AVAILABLE FINISHES: **10BE, A, BSP, D, WSP**
REPLACEMENT INSERT: **PK20 (BL)**
ANSI (aluminum): **J35190, J35193, J36190, J36193**

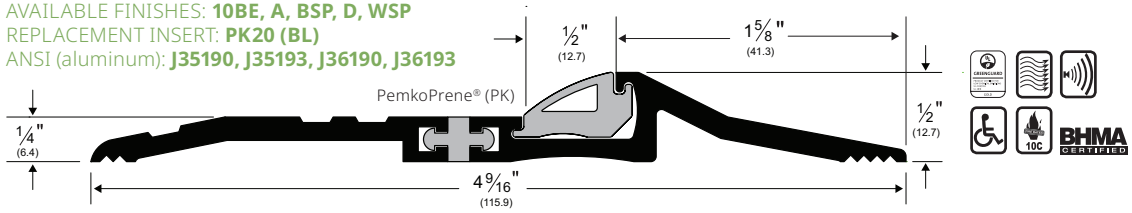

273x292_FGPK

AVAILABLE FINISHES: **10BE, A, BSP, D, WSP**
REPLACEMENT INSERT: **PK20 (BL)**
ANSI (aluminum): **J35190, J35193, J36190, J36193**

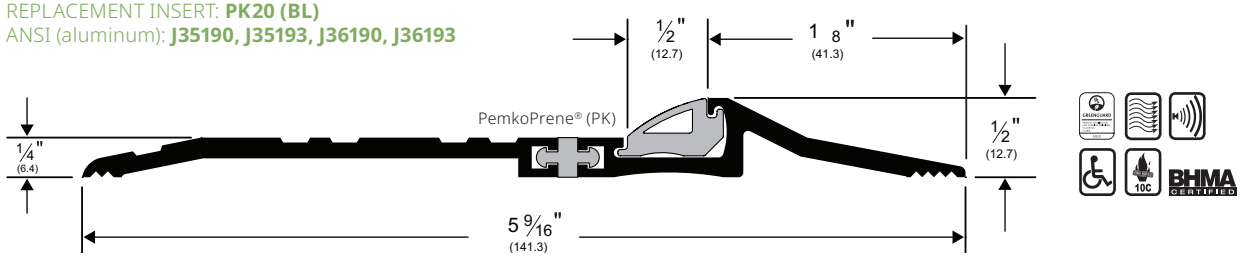

274x292_FGPK

AVAILABLE FINISHES: **10BE, A, BSP, D, WSP**
REPLACEMENT INSERT: **PK20 (BL)**
ANSI (aluminum): **J35190, J35193, J36190, J36193**

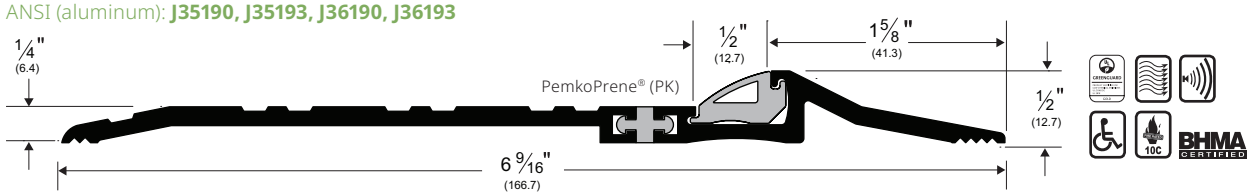

2746x292_FGPK

AVAILABLE FINISHES: **10BE, A, BSP, D, WSP**
REPLACEMENT INSERT: **PK20 (BL)**
ANSI (aluminum): **J35190, J35193, J36190, J36193**

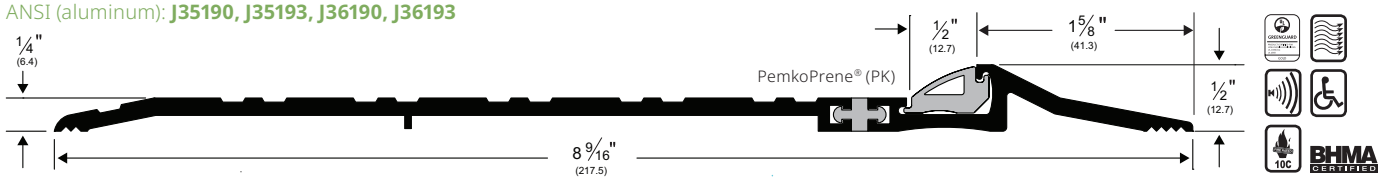

NOTE: Products shown in this section may not be drawn to scale.

AVAILABLE FINISHES FOR PRODUCTS SHOWN ON THIS PAGE
10BE (Satin Bronze Powder Coated Aluminum) **A** (Mill Finish Aluminum) **BSP** (Black Suede Powder Coated Aluminum)
D (Dark Bronze Anodized) **WSP** (White Suede Powder Coated Aluminum)

Copyright © 2015-2025, ASSA ABLOY Accessories and Door Controls Group, Inc., an ASSA ABLOY Group company. All rights reserved.
Reproduction in whole or in part without the express written permission of ASSA ABLOY Accessories and Door Controls Group, Inc. is prohibited.

PEMKO
ASSA ABLOY
Experience a safer and more open world

ACOUSTIC THRESHOLDS

- Pemko's line of Acoustic Thresholds are designed to aid with a door's STC rating
- **2006STC** is only ADA compliant when installed butted to other flooring materials in accordance with ADA guidelines
- Thresholds will not improve a door 's "sealed in-place" STC rating
- See the Acoustic Catalog Section or visit Pemko's website, www.pemko.com, for more Acoustic products and additional information

2006STC_

AVAILABLE FINISHES: **10BE, A, BSP, D, WSP**
REPLACEMENT INSERT: **T5 (BL)**
ANSI (aluminum): **J36100, J36130**

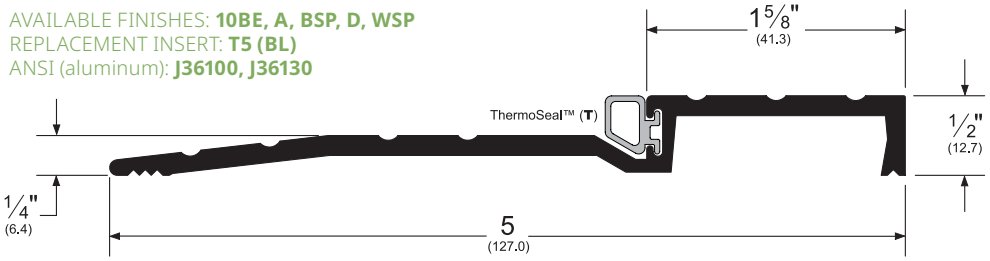

2008_PK

AVAILABLE FINISHES: **10BE, A, BSP, D, WSP**
REPLACEMENT INSERT: **PK381 (BL)**
ANSI (aluminum): **J36100, J36130**

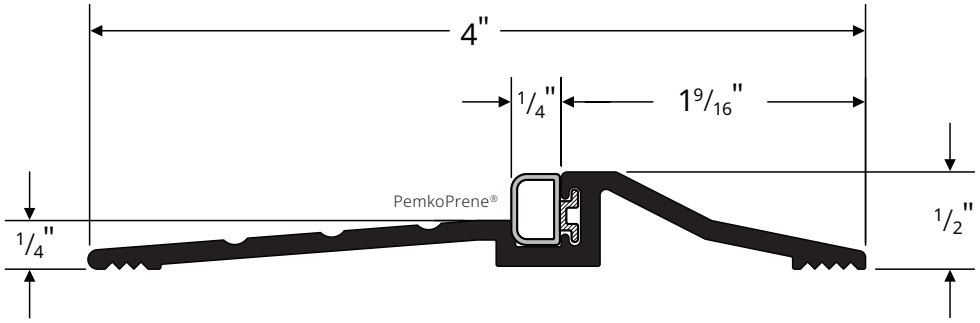

THRESHOLD WITH FLEXIBLE JOINT

- Flexible joint allows the threshold to flex as much as 20° up or down
- Expands up to an additional ¼"

573x5_FG

AVAILABLE FINISHES: **A**
REPLACEMENT INSERT: **PK45 (BL)**
ANSI (aluminum): **J3219, J32190, J32193**

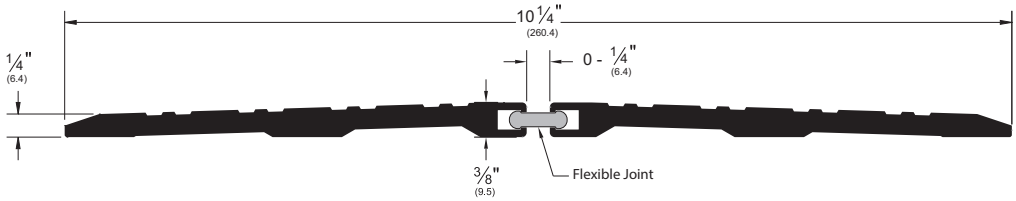

* When used in such a manner that the slope is not steeper than 1:2, and the overall height is ½" or less and all other criteria are met.

NOTE: Products shown in this section may not be drawn to scale.

AVAILABLE FINISHES FOR PRODUCTS SHOWN ON THIS PAGE
10BE (Satin Bronze Powder Coated Aluminum) **A** (Mill Finish Aluminum) **BSP** (Black Suede Powder Coated Aluminum)
D (Dark Bronze Anodized) **WSP** (White Suede Powder Coated Aluminum)

PEMKO
ASSA ABLOY
Experience a safer and more open world

800-824-3018 | www.pemko.com
Check the web site for the up-to-date catalog

Copyright © 2015-2025, ASSA ABLOY Accessories and Door Controls Group, Inc., an ASSA ABLOY Group company. All rights reserved. Reproduction in whole or in part without the express written permission of ASSA ABLOY Accessories and Door Controls Group, Inc. is prohibited.

CONCEALED FASTENER THRESHOLDS

- Material: 6063-T6 Aluminum Alloy and Temper
- Warranty: 5 years from purchase date

650

AVAILABLE FINISHES: **A, D**
ANSI: **J32100, J32130**

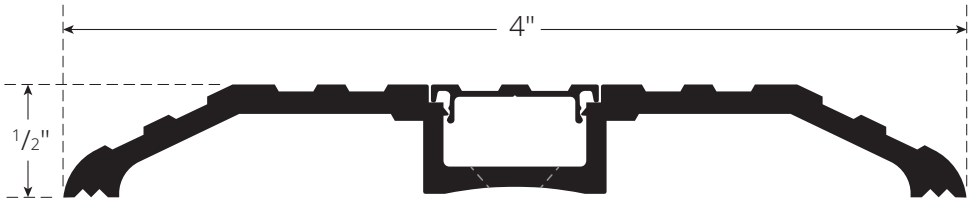

651

AVAILABLE FINISHES: **A, D**
ANSI: **J32100, J32130**

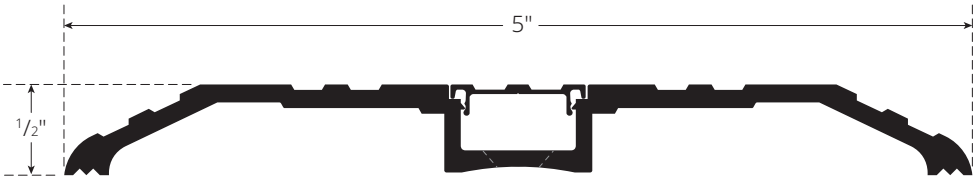

PemkoPrene®

671

AVAILABLE FINISHES: **A, D**
ANSI: **J32100, J32130**

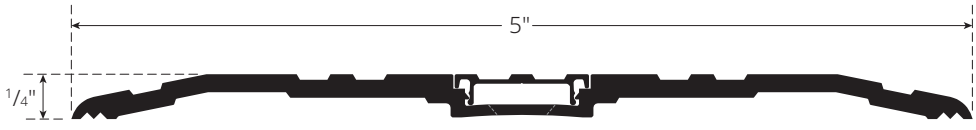

NOTE: Products shown in this section may not be drawn to scale.

AVAILABLE FINISHES FOR PRODUCTS SHOWN ON THIS PAGE
A (Mill Finish Aluminum) **D** (Dark Bronze Anodized)

Copyright © 2015-2025, ASSA ABLOY Accessories and Door Controls Group, Inc., an ASSA ABLOY Group company. All rights reserved.
Reproduction in whole or in part without the express written permission of ASSA ABLOY Accessories and Door Controls Group, Inc. is prohibited.

PEMKO
ASSA ABLOY
Experience a safer and more open world

ECO-V™ THRESHOLDS

- Eco-V™ thresholds create an ideal transition where two different pieces of carpet meet, or carpet meets another surface under a door
- Ideal for use in any high-traffic commercial installation, such as hotels and offices
- Eco-V™ thresholds are manufactured from slightly softer material than competitive products. This aids in the cutting and fitting of the threshold and facilitates easier insertion of the carpet into the holding cavities on the carpet side(s) of the threshold
- Eco-V™ thresholds are designed to work in conjunction with Pemko's **2173_V, 2113_V** and **2343_V** door shoes
- **EV232, EV2325**, and **ADJ232V** thresholds meet the requirements outlined in **ADAAG-2010 (Amended)**; **ICC/ANSI A117.1** and **California Building Code**, Title 24 for Barrier-Free Entry - ½" max rise above finished floor

EV232_

AVAILABLE COLORS: **BL, D**
AVAILABLE LENGTHS: **36", 48", 73"**
Serves as a transition where two pieces of carpet meet beneath an interior door

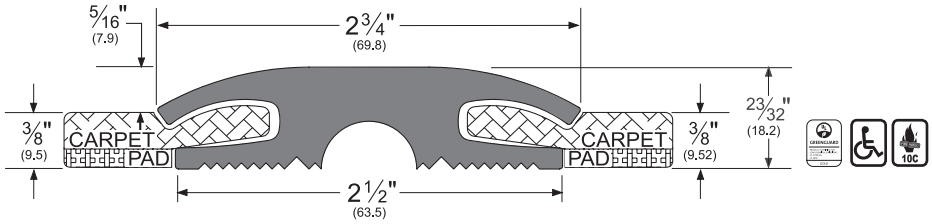

EV2325_

AVAILABLE COLORS: **BL, D**
AVAILABLE LENGTHS: **36", 48", 73"**
Serves as a transition where one piece of carpet meets tile beneath an interior door

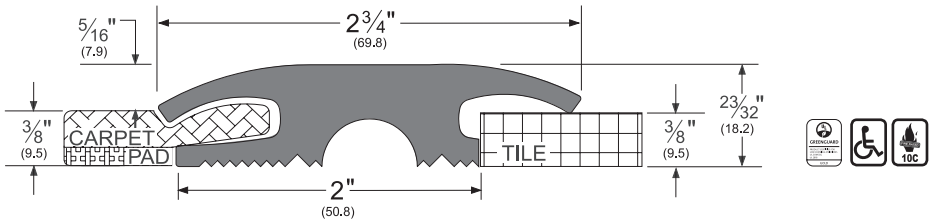

EV2326_

AVAILABLE COLORS: **BL, D**
AVAILABLE LENGTHS: **36", 48", 73"**
Serves as a transition where two pieces of tile meet beneath an interior door

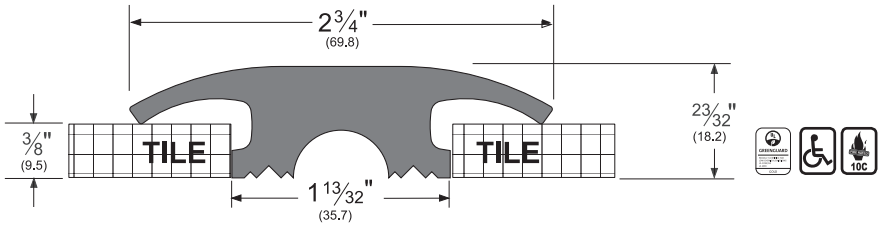

EV2320_

AVAILABLE COLOR: **BL**
AVAILABLE LENGTHS: **36", 48", 73"**
Serves as a transition where carpet meets concrete beneath an interior or exterior door

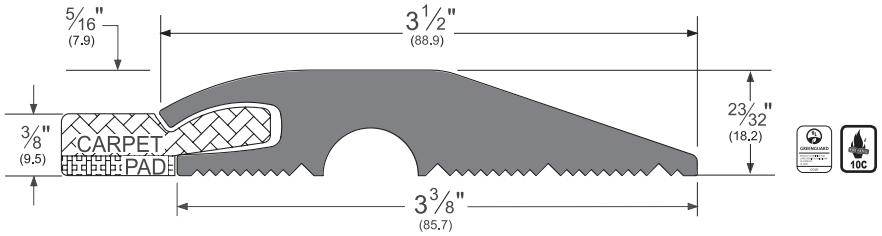

EV2322_

AVAILABLE COLOR: **BL**
AVAILABLE LENGTHS: **36", 48", 73"**
Serves as a transition where carpet meets 1/8" tile beneath an interior door

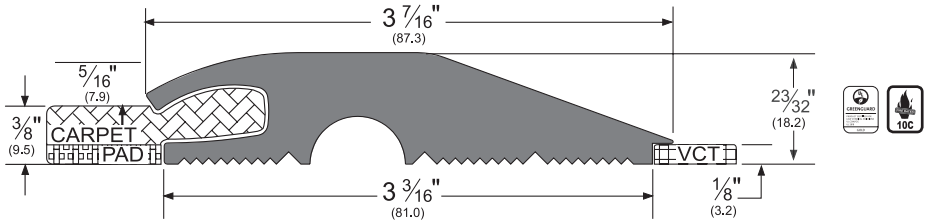

NOTE: Products shown in this section may not be drawn to scale.
AVAILABLE FINISHES FOR PRODUCTS SHOWN ON THIS PAGE
BL (Black) **D** (Dark Brown)

Copyright © 2015-2025, ASSA ABLOY Accessories and Door Controls Group, Inc., an ASSA ABLOY Group company. All rights reserved. Reproduction in whole or in part without the express written permission of ASSA ABLOY Accessories and Door Controls Group, Inc. is prohibited.

ADJUSTABLE-WIDTH ECO-V™ THRESHOLD

- The adjustable-width threshold is designed for installations where the widths of the transition beneath a door may need to change, without completely disassembling and reinstalling the threshold
- The adjustable-width threshold consists of two Eco-V™ end pieces and one Eco-V™ adjustable center section
- Center section (**EV2321** below) can easily be cut to size with a standard razor knife

ADJ232V8_

AVAILABLE COLOR: **BL, D**
AVAILABLE LENGTHS: **36", 48"**

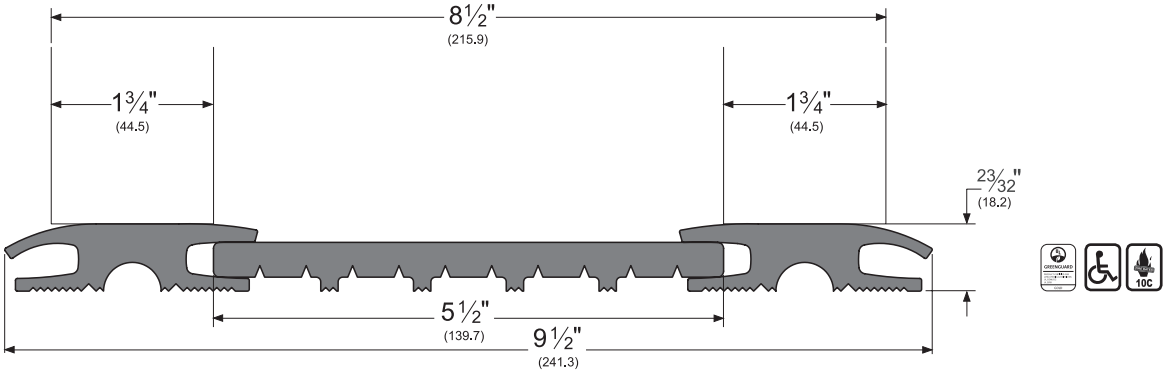

ADJ232V14_

AVAILABLE COLOR: **BL, D**
AVAILABLE LENGTHS: **36", 48"**

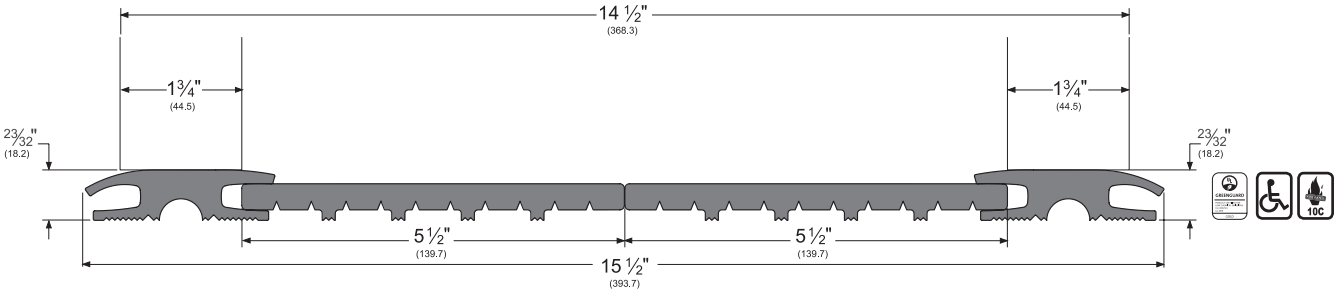

- Eco-V™ threshold ends can be used in many combinations to suit your flooring combination needs
- Shown below is **EV232** used with **EV2325** to illustrate use with carpet outside one communicating door and tile outside the other

ADJ232x2325V8_

AVAILABLE COLOR: **BL, D**
AVAILABLE LENGTHS: **36", 48", 73"**
Serves as a transition where carpet meets tile beneath an interior door

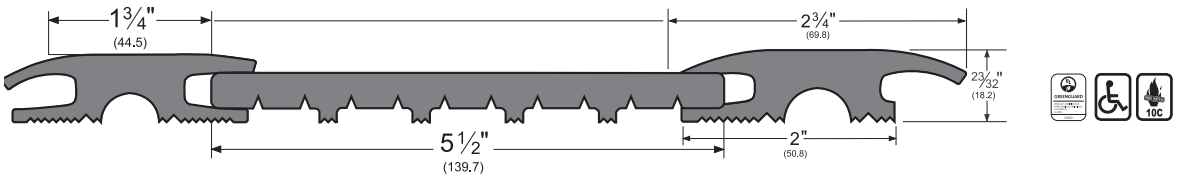

NOTE: Products shown in this section may not be drawn to scale.

AVAILABLE FINISHES FOR PRODUCTS SHOWN ON THIS PAGE
BL (Black) **D** (Dark Brown)

Copyright © 2015-2025, ASSA ABLOY Accessories and Door Controls Group, Inc., an ASSA ABLOY Group company. All rights reserved.
Reproduction in whole or in part without the express written permission of ASSA ABLOY Accessories and Door Controls Group, Inc. is prohibited.

PEMKO
ASSA ABLOY
Experience a safer and more open world

HEAVY DUTY LATCHING PANIC EXIT SADDLE THRESHOLD

- Ideal for heavy-duty, high-traffic and high weight-bearing applications, such as industrial facilities, schools, cafeterias, manufacturing buildings and hospitals
- Withstands coastal and high-humidity conditions
- Ultra-durable, extra thick extruded nickel-aluminum construction is guaranteed for ten (10) years

All items on this page are available with **PemKote™** non-slip coating (see General Information section). Please specify "PemKote™" when ordering. Please furnish drilling instructions when ordering PemKote™ as it is difficult to drill through this coating.

2705_T

AVAILABLE FINISHES: **10BE, A, AK, BSP, D, WSP**
ANSI (aluminum): **J35100, J35130, J36100, J36130**
ANSI (alum w/PemKote): **J36200, J36130**

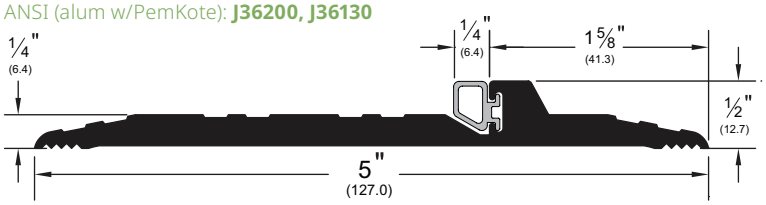

HEAVY DUTY THRESHOLDS

- Ideal for heavy-duty, high-traffic and high weight-bearing applications, such as industrial facilities, schools, cafeterias, manufacturing buildings and hospitals
- Withstands coastal and high-humidity conditions
- Ultra-durable, extra thick extruded nickel-aluminum construction is guaranteed for ten (10) years

All items on this page are available with **PemKote™** non-slip coating (see General Information section). Please specify "PemKote™" when ordering. Please furnish drilling instructions when ordering PemKote™ as it is difficult to drill through this coating.

2715

AVAILABLE FINISHES: **10BE, 4E, A, AK, BSP, D, WSP**
ANSI (aluminum): **J32100, J32130**
ANSI (alum w/PemKote): **J32200, J32230**

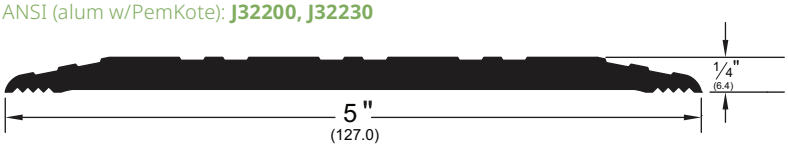

2716

AVAILABLE FINISHES: **10BE, 4E, A, AK, BSP, D, WSP**
ANSI (aluminum): **J32100, J32130**
ANSI (alum w/PemKote): **J32200, J32230**

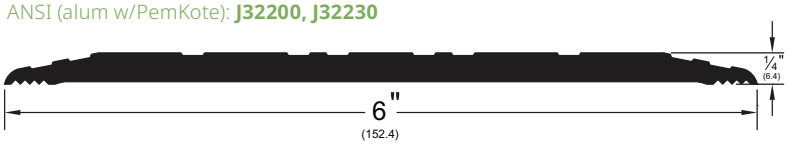

1715_

AVAILABLE FINISHES: **10BE, 4E, A, AK, BSP, D, WSP**
ANSI (aluminum): **J32100, J32130**
ANSI (alum w/PemKote): **J32200, J32230**
Allow 5/8" door clearance

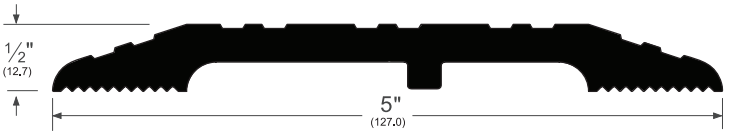

NOTE: Products shown in this section may not be drawn to scale.

AVAILABLE FINISHES FOR PRODUCTS SHOWN ON THIS PAGE
10BE (Satin Bronze Powder Coated Aluminum) **4E** (Translucent Brass Powder Coat) **A** (Mill Finish Aluminum)
AK (Mill Finish Aluminum w/PemKote™ Non-Slip Coating) **BSP** (Black Suede Powder Coated Aluminum)
D (Dark Bronze Anodized) **WSP** (White Suede Powder Coated Aluminum)

NOTE: **D** is available with limited inventory

Copyright © 2015-2025, ASSA ABLOY Accessories and Door Controls Group, Inc., an ASSA ABLOY Group company. All rights reserved. Reproduction in whole or in part without the express written permission of ASSA ABLOY Accessories and Door Controls Group, Inc. is prohibited.

HEAVY DUTY THRESHOLDS *(Cont.)*

1716_

AVAILABLE FINISHES: **10BE, 4E, A, AK, BSP, D, WSP**
ANSI (aluminum): **J32100, J32130**
ANSI (alum w/PemKote): **J32200, J32230**
Allow 5/8" door clearance

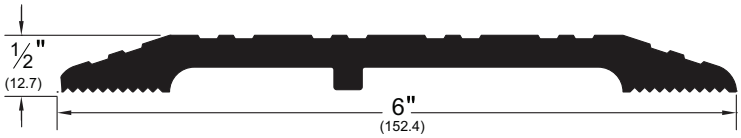

All items on this page are available with **PemKote**™ non-slip coating (see General Information section). Please specify "PemKote™" when ordering. Please furnish drilling instructions when ordering PemKote™ as it is difficult to drill through this coating.

MODULAR HEAVY DUTY THRESHOLDS

- Modular construction allows threshold to fit openings up to 15" wide without the expense of custom cast thresholds. There is no restriction on width additions (in 1" increments)
- Modular Thresholds can be thermally broken. Order by adding "FG" to the part number and designate at which joint the thermal key should be supplied. Note that each thermal key will add 1/8" to overall width of threshold.

1717_

AVAILABLE FINISHES: **10BE, 4E, A, AK, BSP, D, WSP**
Allow 5/8" door clearance

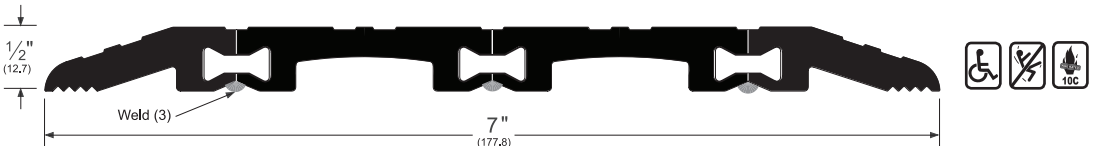

1718_

AVAILABLE FINISHES: **10BE, 4E, A, AK, BSP, D, WSP**
Allow 5/8" door clearance

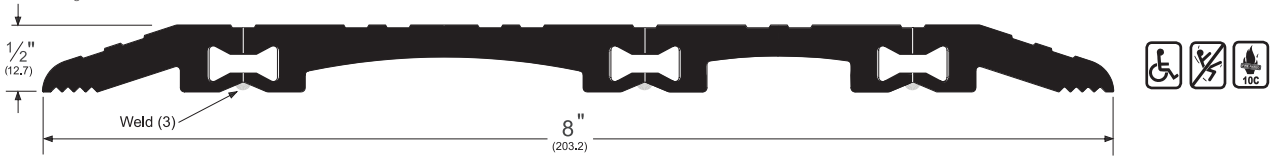

1719_

AVAILABLE FINISHES: **10BE, 4E, A, AK, BSP, D, WSP**
Allow 5/8" door clearance

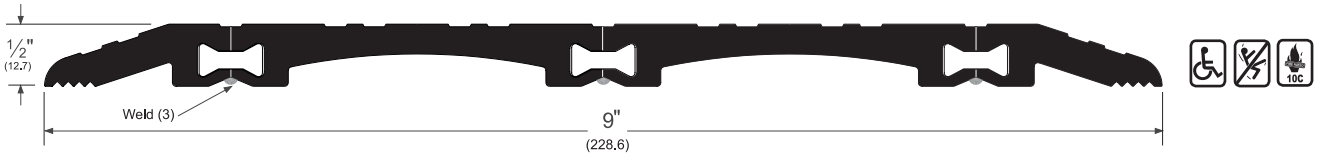

NOTE: Products shown in this section may not be drawn to scale.

AVAILABLE FINISHES FOR PRODUCTS SHOWN ON THIS PAGE
10BE (Satin Bronze Powder Coated Aluminum) **4E** (Translucent Brass Powder Coat) **A** (Mill Finish Aluminum)
AK (Mill Finish Aluminum w/PemKote™ Non-Slip Coating) **BSP** (Black Suede Powder Coated Aluminum)
D (Dark Bronze Anodized) **WSP** (White Suede Powder Coated Aluminum)

NOTE: **D** is available with limited inventory

Copyright © 2015-2025, ASSA ABLOY Accessories and Door Controls Group, Inc., an ASSA ABLOY Group company. All rights reserved.
Reproduction in whole or in part without the express written permission of ASSA ABLOY Accessories and Door Controls Group, Inc. is prohibited.

PEMKO
ASSA ABLOY
Experience a safer and more open world

WATER RETURN THRESHOLDS

- Designed to drain water back to the exterior of a commercial door at 2-gallons per minute minimum flow rate
- Helps prevent slips and falls on smooth floors by redirecting water

1745

AVAILABLE FINISHES: **A, D**
AVAILABLE LENGTHS: 36", 48", 72"

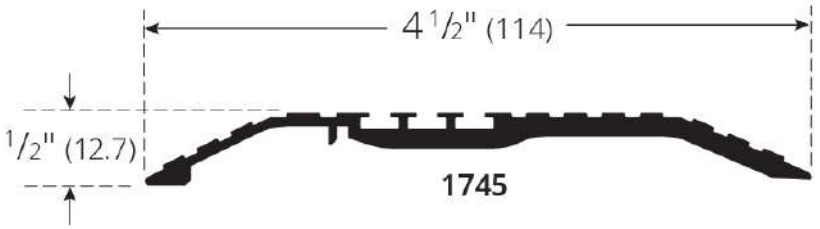

BHMA CERTIFIED

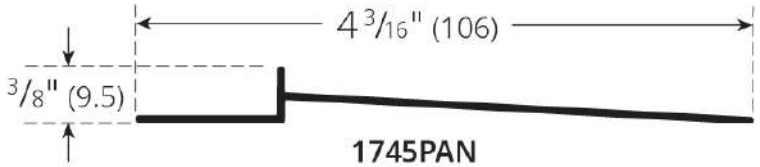

1745PAN
Water Return Pan

NOTE: Products shown in this section may not be drawn to scale.

AVAILABLE FINISHES FOR PRODUCTS SHOWN ON THIS PAGE
A (Mill Finish Aluminum) **D** (Dark Bronze Anodized)

Copyright © 2015-2025, ASSA ABLOY Accessories and Door Controls Group, Inc., an ASSA ABLOY Group company. All rights reserved. Reproduction in whole or in part without the express written permission of ASSA ABLOY Accessories and Door Controls Group, Inc. is prohibited.

FLOOR PLATES/SAFETY TREADS

- Pemko can fabricate almost any floor plate threshold you might require
- Furnished undrilled unless drilling instructions are specified when ordering
- Ordering of fasteners does not constitute drilling instructions
- Elevated floor plates require support every 4" on center, at welded seams, and as necessary for support
- Orders with “x” in the product number (i.e. 195 x 193 x 195) indicate welding

Available with PemKote™ non-slip coating (see General Information section). Please specify “PemKote™” when ordering. Please furnish drilling instructions when ordering PemKote™ as it is difficult to drill through this coating.

190_

AVAILABLE FINISHES: **10BE, A, BSP, D, WSP**
ANSI (aluminum): **J37100, J37130**

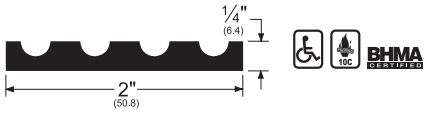

191_

AVAILABLE FINISHES: **10BE, A, BSP, D, WSP**
ANSI (aluminum): **J37100, J37130**



192_

AVAILABLE FINISHES: **10BE, A, BSP, D, WSP**
ANSI (aluminum): **J37100, J37130**



193_

AVAILABLE FINISHES: **10BE, A, BSP, D, WSP**
ANSI (aluminum): **J37100, J37130**

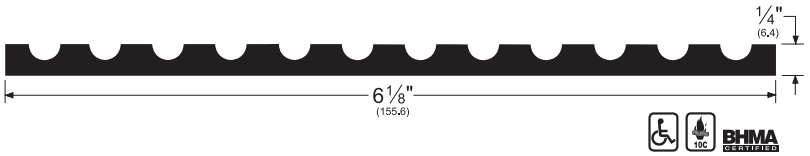

228_

AVAILABLE FINISHES: **10BE, A, BSP, D, WSP**
ANSI (aluminum): **J37100, J37130**

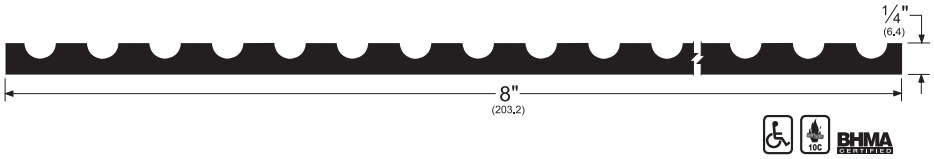

227_

AVAILABLE FINISHES: **10BE, A, BSP, D, WSP**
ANSI (aluminum): **J33100, J33130**



229_

AVAILABLE FINISHES: **10BE, A, BSP, D, WSP**
ANSI (aluminum): **J33100, J33130**



2266_

AVAILABLE FINISHES: **10BE, A, BSP, WSP**
ANSI (aluminum): **J37100, J37130**

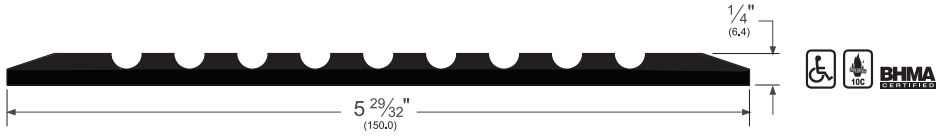

2286_

AVAILABLE FINISHES: **10BE, A, BSP, WSP**
ANSI (aluminum): **J37100, J37130**



NOTE: Products shown in this section may not be drawn to scale.

AVAILABLE FINISHES FOR PRODUCTS SHOWN ON THIS PAGE
10BE (Satin Bronze Powder Coated Aluminum) **A** (Mill Finish Aluminum)
BSP (Black Suede Powder Coated Aluminum) **D** (Dark Bronze Anodized)
WSP (White Suede Powder Coated Aluminum)

Copyright © 2015-2025, ASSA ABLOY Accessories and Door Controls Group, Inc., an ASSA ABLOY Group company. All rights reserved.
Reproduction in whole or in part without the express written permission of ASSA ABLOY Accessories and Door Controls Group, Inc. is prohibited.

PEMKO
ASSA ABLOY
Experience a safer and more open world

FLOOR PLATES/SAFETY TREADS *(Cont.)*

19125_

AVAILABLE FINISHES: **10BE, A, AK, BSP, WSP**
ANSI (aluminum): **J37100, J37130**

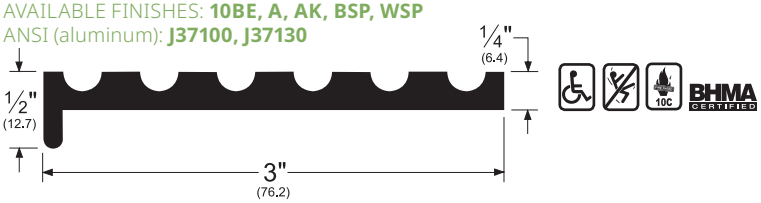

ALUMINUM PLATES

- Used where a cover plate, expansion joint plate, or wide extra-strength metal plate is needed
- Maximum length is 144". All aluminum plates are provided NET length
- Both length edges are beveled at a 45° angle; "single edge bevel" or "no bevel" is also available at no extra cost; length of plate should be roughly equal to width of opening.
- Plates are supplied undrilled unless otherwise specified. Pemko reserves the right to charge for special fastener patterns
- Plates are furnished with #10 x 1½" wood screws. Screws supplied: one (1) screw per foot up to 8" wide; two (2) screws per foot 8" to 12" wide; and three (3) screws per foot over 12" wide
- Plates are ADA compliant only when ordered with PemKote finish

18/1_ - (width x length)

AVAILABLE FINISH: **10BE, A, AK, BSP, WSP**
ANSI (aluminum): **J37300, J37330**
ANSI (alum w/PemKote): **J37400, J37430**

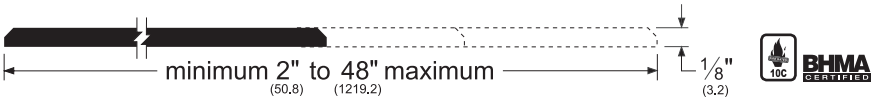

14/1_ - (width x length)

AVAILABLE FINISH: **10BE, A, AK, BSP, WSP**
ANSI (aluminum): **J37300, J37330**
ANSI (alum w/PemKote): **J37400, J37430**

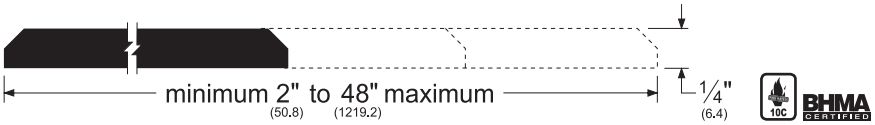

NOTE: Products shown in this section may not be drawn to scale.

AVAILABLE FINISHES FOR PRODUCTS SHOWN ON THIS PAGE
10BE (Satin Bronze Powder Coated Aluminum) **A** (Mill Finish Aluminum)
AK (Mill Finish Aluminum w/PemKote™ Non-Slip Coating) **BSP** (Black Suede Powder Coated Aluminum)
D (Dark Bronze Anodized) **WSP** (White Suede Powder Coated Aluminum)

NOTE: **D** is available with limited inventory

Copyright © 2015-2025, ASSA ABLOY Accessories and Door Controls Group, Inc., an ASSA ABLOY Group company. All rights reserved. Reproduction in whole or in part without the express written permission of ASSA ABLOY Accessories and Door Controls Group, Inc. is prohibited.

CARPET SEPARATORS

174_

AVAILABLE FINISHES: **10BE, BSP, C, D, WSP**
ANSI (aluminum): **J32300, J32340**



1951_

AVAILABLE FINISHES: **A**
ANSI (aluminum): **J37300, J37330**

- Supplied undrilled unless otherwise specified
- ADA compliant when butted to 1/4" or 1/2" high flooring material

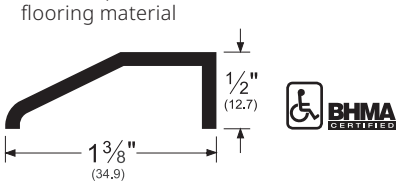

230_

AVAILABLE FINISHES: **10BE, A, BSP, WSP**

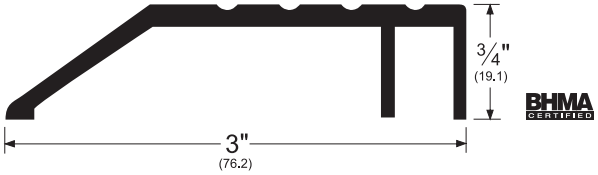

236_

AVAILABLE FINISHES: **10BE, A, BSP, D, WSP**
ANSI (aluminum): **J32134**

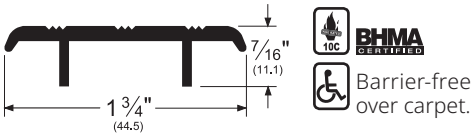

2364_

AVAILABLE FINISHES: **10BE, A, BSP, D, WSP**
ANSI (aluminum): **J32134**, **J32140**



NOTE: Products shown in this section may not be drawn to scale.

AVAILABLE FINISHES FOR PRODUCTS SHOWN ON THIS PAGE
10BE (Satin Bronze Powder Coated Aluminum) **A** (Mill Finish Aluminum)
BSP (Black Suede Powder Coated Aluminum) **C** (Clear Anodized)
D (Dark Bronze Anodized) **WSP** (White Suede Powder Coated Aluminum)

Copyright © 2015-2025, ASSA ABLOY Accessories and Door Controls Group, Inc., an ASSA ABLOY Group company. All rights reserved.
Reproduction in whole or in part without the express written permission of ASSA ABLOY Accessories and Door Controls Group, Inc. is prohibited.

PEMKO
ASSA ABLOY
Experience a safer and more open world

FLOOR PLATE SUPPORTS/ACCESSORIES

- Please see information under Floor Plates and Safety Treads (page 134-135)

195_

AVAILABLE FINISHES: **10BE, A, BSP, D, WSP**
ANSI (aluminum): **J37300**

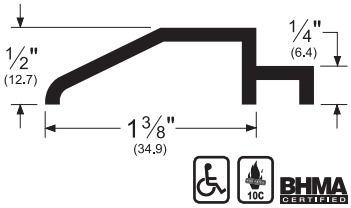

196_

AVAILABLE FINISHES: **10BE, A, BSP, D, WSP**
ANSI (aluminum): **J37300, J37330**
ANSI (brass): **J17300, J17330**
When ordering, specify whether 196 material is to be used as trim or support

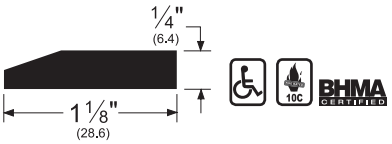

200_

AVAILABLE FINISHES: **10BE, A, BSP, D, WSP**
ANSI (aluminum): **J37300, J37330**

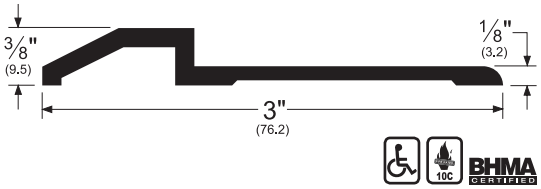

ELEVATORS

- Elevators allow for custom sizing in offset conditions
- Fasteners are not included and are not required with these shapes when used in conjunction with a threshold

183_

AVAILABLE FINISHES:
10BE, A, B, BSP, D, WSP

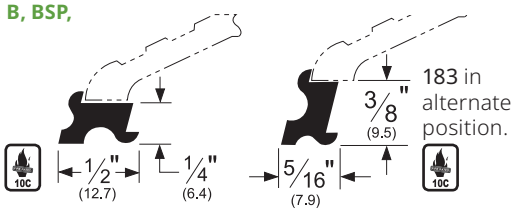

282_

AVAILABLE FINISHES:
10BE, A, BSP, D, WSP

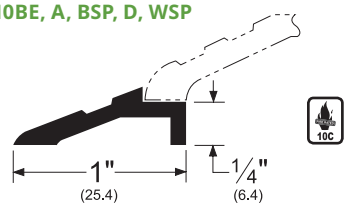

283_

AVAILABLE FINISHES:
10BE, A, B, BSP, D, WSP

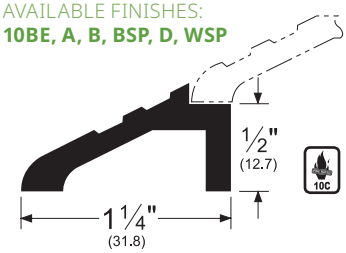

NOTE: Products shown in this section may not be drawn to scale.

AVAILABLE FINISHES FOR PRODUCTS SHOWN ON THIS PAGE
10BE (Satin Bronze Powder Coated Aluminum) **A** (Mill Finish Aluminum)
B (Mill Finish Extruded Bronze [Brass])
BSP (Black Suede Powder Coated Aluminum) **C** (Clear Anodized)
D (Dark Bronze Anodized) **WSP** (White Suede Powder Coated Aluminum)

PEMKO
ASSA ABLOY
Experience a safer and more open world

800-824-3018 | www.pemko.com
Check the web site for the up-to-date catalog

Copyright © 2015-2025, ASSA ABLOY Accessories and Door Controls Group, Inc., an ASSA ABLOY Group company. All rights reserved. Reproduction in whole or in part without the express written permission of ASSA ABLOY Accessories and Door Controls Group, Inc. is prohibited.

THRESHOLD STOP STRIPS

- Use with standard flat top, saddle threshold to provide a door stop and seal at bottom of door
- Stop strips are supplied pre-drilled with #10-24 Phillips flat head machine screws of appropriate length
- These stops will affect the pivot hole location of an assembly

1842_S

AVAILABLE FINISHES: **10BE, A, BSP, D, WSP**
REPLACEMENT INSERT: **S3 (BL, W)**
- Allow 1/8" door clearance from top of threshold
- Barrier-free with 1/4" saddle only

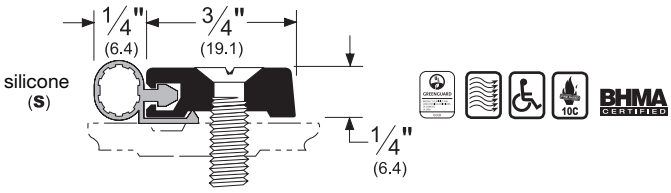

290_SSTOP

AVAILABLE FINISHES: **10BE, A, BSP, D, G, WSP**
REPLACEMENT INSERT: **S3 (BL, W)**
- Allow 1/8" door clearance from top of threshold
- Barrier-free with 1/4" saddle only

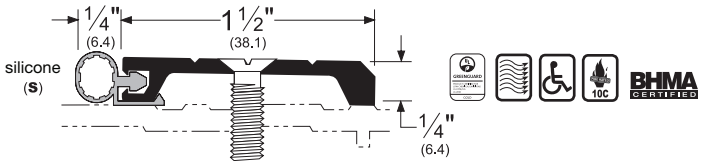

184_T

AVAILABLE FINISHES: **10BE, A, BSP, D, WSP**
REPLACEMENT INSERT: **T5 (BL)**

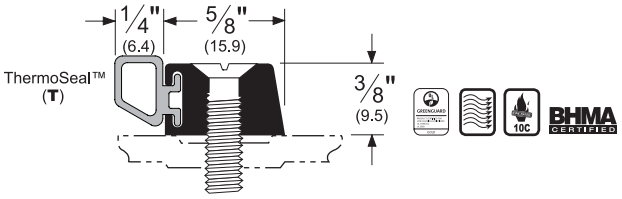

Alternate Inserts

1842_PK
290_PKSTOP
REPLACEMENT INSERT:
PK47 (BL, GR)



Alternate Inserts

1842_V
290_VSTOP
REPLACEMENT INSERT:
EV47 (BL, GR, W)

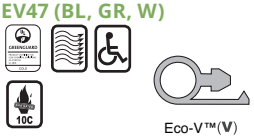

Alternate Inserts

184_P
REPLACEMENT INSERT:
P2 (BL, GR)



184_V
REPLACEMENT INSERT:
EV41 (BL, GR, W)

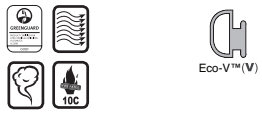

NOTE: Products shown in this section may not be drawn to scale.

AVAILABLE FINISHES FOR PRODUCTS SHOWN ON THIS PAGE
10BE (Satin Bronze Powder Coated Aluminum) **A** (Mill Finish Aluminum) **B** (Mill Finish Extruded Bronze [Brass])
BSP (Black Suede Powder Coated Aluminum) **D** (Dark Bronze Anodized) **G** (Gold Anodized)
WSP (White Suede Powder Coated Aluminum)

NOTE: **G** is available with limited inventory

Copyright © 2015-2025, ASSA ABLOY Accessories and Door Controls Group, Inc., an ASSA ABLOY Group company. All rights reserved.
Reproduction in whole or in part without the express written permission of ASSA ABLOY Accessories and Door Controls Group, Inc. is prohibited.

PEMKO
ASSA ABLOY
Experience a safer and more open world

FLOOR CLOSER THRESHOLDS/COVER PLATE ASSEMBLIES

- **TYPE OF ASSEMBLY** – Type 11 or 14 for center hung, Type 13 or 15 for offset hung
- **MATERIALS** – Saddles, floor plates, supports, risers, elevators, and stop strips
- **CLOSER TO BE USED** – Manufacturer and model number
- **NET LENGTH** – Jamb-to-Jamb. Assembly Types 11, 13 and 14 are cut with center section 1/2" over net length up to 48" and 1" over net length over 48" to allow for fitting on the job. Please specify "net length", if required. Assembly Type 15 is cut at net length because of factory-cut miters
- **HANDING** – For single doors, specify right or left hand. For pairs of doors, handing is not required
- **SPECIAL FINISHES** – Examples include polished, oxidized and oil rubbed, and PemKote™
- **SPECIAL FASTENERS** – For center section only. Examples include: MSES, FHSL25, and MSES-SS
- **SPECIAL FABRICATION INSTRUCTIONS** – Notching, full miters, etc. Assembly Type 11 is supplied without mitered ends, and assembly Types 13, 14 and 15 are supplied with both ends mitered. Also, when ordering stop strips (shown on page 132), specify door thickness and pivot offset so that the threshold assembly width and pivot dimension can be determined
- **RETURNS AND ALLOWANCES** – Restock fee for "custom" material applies to these products

BHMA CERTIFIED 10C

THRESHOLD WIDTH	FASTENER ROWS	THRESHOLD WIDTH	FASTENER ROWS
2" to 7 7/8"	1 Row	19" to 24 7/8"	4 Rows
8" to 12 7/8"	2 Rows	25" to 30 7/8"	5 Rows
13" to 18 7/8"	3 Rows	31" to 36 7/8"	6 Rows

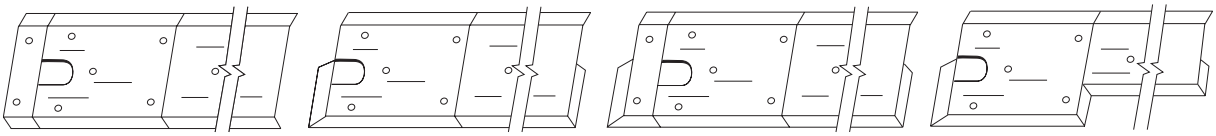

TYPE 11 Center hung | TYPE 13 Offset | TYPE 14 Center hung | TYPE 15 Offset

THRESHOLDS FOR TYPE 11, 13, 14				
SIZE	PRODUCT NUMBER	FINISHES	PRODUCT NUMBER	FINISHES
1/2" x 7"	176_	A, D, G		
1/4" x 7"	276_	A, D, G		
1/2" x 8"	2548_	A, D, G	254_ x 4_	B
1/4" x 8"	2748_	A, D, G	274_ x 4_	B
1/2" x 8 7/8"	193_ x 2/195_	A, D, G		
*3/4" x 12" x 1/4"	257_ x 259_	A, D, G		

* Ramp threshold for 1/2" offset.

Pemko	Rixson
Type 11	Type 1
Type 13	Type 3
Type 14	Type 4
Type 15	Type 5

THRESHOLDS FOR TYPE 15				
SIZE	PRODUCT NUMBER	FINISHES	PRODUCT NUMBER	FINISHES
1/2" x 7" x 4"	176_ x 170_	A, D, G		
1/4" x 7" x 4"	276_ x 270_	A, D, G		
1/2" x 7" x 5"	176_ x 171_	A, D, G		
1/4" x 7" x 5"	276_ x 271_	A, D, G		
1/2" x 8" x 4"	2548_ x 170_	A, D, G	254 x 4_ x 170_	B
1/4" x 8" x 4"	2748_ x 270_	A, D, G	274 x 4_ x 270_	B
1/2" x 8" x 5"	2548_ x 171_	A, D, G	254 x 4_ x 171_	B
1/4" x 8" x 5"	2748_ x 271	A, D, G	274 x 4_ x 271_	B

NOTE: Products shown in this section may not be drawn to scale.

AVAILABLE FINISHES FOR PRODUCTS SHOWN ON THIS PAGE
A (Mill Finish Aluminum) **B** (Mill Finish Extruded Bronze [Brass]) **D** (Dark Bronze Anodized) **G** (Gold Anodized)

NOTE: **G** is available with limited inventory

PEMKO ASSA ABLOY

Experience a safer and more open world

800-824-3018 | www.pemko.com

Check the web site for the up-to-date catalog

Copyright © 2015-2025, ASSA ABLOY Accessories and Door Controls Group, Inc., an ASSA ABLOY Group company. All rights reserved. Reproduction in whole or in part without the express written permission of ASSA ABLOY Accessories and Door Controls Group, Inc. is prohibited.

ANSI/BHMA A156.21 THRESHOLDS - CROSS REFERENCE

- Following a profile number, "**A**" signifies the base metal as aluminum and will include any anodized finish
- Following a profile number, "**B**" signifies the base metal as architectural bronze [brass]
- Consult **www.buildershardware.com** for the most up-to-date BHMA Certified Product Directory (CPD) information

ANSI No.	Pemko Item#
J12100	170B, 171B, 172B, 176B, 198B, 254x4B, 254x5B, 255x5B, 270B, 271B, 272B, 274x4B, 276B
J12130	170B, 171B, 172B, 176B, 254x4B, 254x5B, 255x5B, 270B, 271B, 272B, 274x4B, 276B
J12134	236B, 2364B
J12139	252x2BFG, 252x3BFG, 253x3BFG, 253x4BFG, 254x4BFG, 254x5BFG, 255x5BFG, 273x3BFG, 273x4BFG, 274x4BFG
J12190	252x2BFG, 252x3BFG, 253x3BFG, 253x4BFG, 254x4BFG, 254x5BFG, 255x5BFG, 273x3BFG, 273x4BFG, 274x4BFG
J12193	252x2BFG, 252x3BFG, 253x3BFG, 253x4BFG, 254x4BFG, 254x5BFG, 273x3BFG, 273x4BFG, 274x4BFG
J12300	151B, 173B, 175B
J12330	151B, 173B, 175B
J13100	227B, 252B, 253B, 254B, 255B, 273B, 274B
J13130	227B, 252B, 253B, 254B, 255B, 273B, 274B
J13133	273B, 274B
J14170	101B, 108B, 114B
J15100	177B, 181B, 2005B, 252x226B, 253x226B, 254x226B, 255x226B
J15130	2005B
J15190	252x226BFG, 253x226BFG, 254x226BFG, 255x226BFG
J15300	159B
J16100	177BT, 181BT, 2005B, 2005BT, 252x226BT, 253x226BT, 254x226BT, 255x226BT
J16130	2005B
J16300	159BT
J17300	174B, 195B, 196B, 200B
J17330	174B, 195B, 196B, 200B
J18130	257B
J19100	176B, 254x4B, 257B, 274x4B, 276B
J19130	176B, 254x4B, 257B, 274x4B, 276B
J19135	176B, 176B, 176Bx170B, 176Bx171B, 254x4B, 254x4B, 254x4Bx170B, 254x4Bx171B, 257B, 257B, 274x4B, 274x4B, 274x4Bx270B, 274x4Bx271B, 276B, 276B, 276Bx270B, 276Bx271B
J19150	176B, 176B, 176Bx170B, 176Bx171B, 254x4B, 254x4Bx170B, 254x4Bx171B, 257B, 274x4B, 274x4B, 274x4Bx270B, 274x4Bx271B, 276B, 276B, 276Bx270B, 276Bx271B
J31100	206AV, 207AV
J32100	156A, 1571A, 157A, 158A, 166A, 169A, 1700A, 170A, 1715A, 171A, 172A, 176A, 182A, 198A, 2548A, 2549A, 2550A, 2555x253A, 256x6A, 256x6A, 270A, 2715A, 2716A, 271A, 2727A, 272A, 2746x6A, 2748A, 2749A, 2750A, 276A

Copyright © 2015-2025, ASSA ABLOY Accessories and Door Controls Group, Inc., an ASSA ABLOY Group company. All rights reserved.
Reproduction in whole or in part without the express written permission of ASSA ABLOY Accessories and Door Controls Group, Inc. is prohibited.

ANSI/BHMA A156.21 THRESHOLDS - CROSS REFERENCE (Cont.)

ANSI No.	Pemko Item#
J32130	158A, 166A, 169A, 1700A, 1701A, 1715A, 1716A, 1716A, 171A, 172A, 176A, 2548A, 2549A, 2550A, 2555x253A, 256x6A, 256x6A, 270A, 2715A, 2716A, 271A, 2727A, 272A, 2746x6A, 2748A, 2749A, 2750A, 276A
J32134	236A, 2364A, 2366A
J32138	158A, 2727A
J32139	252x2AFG, 252x3AFG, 253x3AFG, 253x4AFG, 253x6AFG, 254x4AFG, 254x5AFG, 2555x253AFG, 255x5AFG, 256x6AFG, 273x3AFG, 273x4AFG, 2746x6AFG, 274x4AFG
J32140	236A
J32180	157A, 1571A, 158A, 182A, 2727A
J32190	252x2AFG, 252x3AFG, 253x3AFG, 253x4AFG, 253x6AFG, 254x4AFG, 254x5AFG, 2555x253AFG, 255x5AFG, 256x6AFG, 273x3AFG, 273x4AFG, 2746x6AFG, 274x4AFG
J32193	252x2AFG, 252x3AFG, 253x3AFG, 253x4AFG, 253x6AFG, 254x4AFG, 254x5AFG, 2555x253AFG, 255x5AFG, 256x6AFG, 273x3AFG, 273x4AFG, 2746x6AFG, 274x4AFG
J32200	1715AK, 2715AK, 2716AK
J32230	1715AK, 1716AK, 2715AK, 2716AK
J32300	151A, 1546A, 1547A, 154A, 173A, 174A, 175A
J32330	151A, 1546A, 1547A, 154A, 173A, 174A, 175A
J33100	157A, 1571A, 182A, 1875A, 1877A, 227A, 229A, 252A, 253A, 254A, 2555A, 255A, 2565A, 256A, 273A, 2746A, 274A, 278A, 279A
J33130	227A, 229A, 252A, 253A, 254A, 255A, 2565A, 256A, 273A, 2746A, 274A, 278A, 279A
J33133	273A, 2746A, 274A, 278A, 279A
J33180	1875A, 1877A
J34170	101A, 107A, 114A, 121A, 123A
J35100	177A, 179A, 181A, 2005A, 2006A, 2008A, 252x226A, 253x226A, 254x226A, 255x226A, 2705A, 277A
J35130	2005A, 206A, 2008A, 2705A
J35190	252x226AFG, 253x226AFG, 254x226AFG, 255x226AFG
J35300	159A, 185A, 1855A
J36100	177AT, 179AT, 181AT, 2005AT, 2006AT, 2006STC, 2007AT, 2008APK, 2009APK, 2010APK, 252x226A, 252x266A, 253x226A, 254x226AT, 255x226AT, 2705A, 277AR, 277AS
J36130	2005A, 2005AT, 2006AT, 2006STC, 2008APK, 2009APK, 2010APK, 2705A, 273x224AFG, 273x292AFG, 2746x292AFG, 274x224AFG, 274x292AFG, 278x224AFG, 278x292AFG, 279x224AFG, 279x292AFG
J36139	273x224AFG, 273x292AFG, 2746x292AFG, 274x224AFG, 274x292AFG, 278x224AFG, 278x292AFG, 279x224AFG, 279x292AFG
J36190	252x226AFGT, 253x226AFG, 253x226BFG, 254x226AFG, 255x226AFG, 273x224AFG, 273x292AFG, 2746x292AFG, 274x224AFG, 274x292AFG, 278x224AFG, 278x292AFG, 279x224AFG, 279x292AFG
J36193	273x224AFG, 273x292AFG, 2746x292AFG, 274x224AFG, 274x292AFG, 278x224AFG, 278x292AFG, 279x224AFG, 279x292AFG
J36200	2705AK
J36230	2705AK

Copyright © 2015-2025, ASSA ABLOY Accessories and Door Controls Group, Inc., an ASSA ABLOY Group company. All rights reserved.
Reproduction in whole or in part without the express written permission of ASSA ABLOY Accessories and Door Controls Group, Inc. is prohibited.

Copyright © 2015-2025, ASSA ABLOY Accessories and Door Controls Group, Inc., an ASSA ABLOY Group company. All rights reserved.
Reproduction in whole or in part without the express written permission of ASSA ABLOY Accessories and Door Controls Group, Inc. is prohibited.

PEMKO
ASSA ABLOY
Experience a safer and more open world

ANSI/BHMA A156.21 THRESHOLDS - CROSS REFERENCE (Cont.)

ANSI No.	Pemko Item#
J36300	159AT, 185AT, 1855AT
J37100	190A, 191A, 192A, 193A, 228A, 2266A, 2286A, 19125A
J37130	190A, 191A, 192A, 193A, 228A, 2266A, 2286A, 19125A
J37200	190AK, 191AK, 192AK, 193AK, 19125AK
J37230	190AK, 191AK, 192AK, 193AK, 19125AK
J37300	14/1A, 18/1A, 194A, 1951A, 195A, 196A, 200A
J37330	14/1A, 174C, 18/1A, 1951A, 195A, 196A, 200A
J37400	14/1A, 18/1A
J37430	14/1A, 18/1A
J38130	257A, 259A, 257x259A, RAMP10A, RAMP11A, RAMP12A, RAMP1A, RAMP2A, RAMP3A, RAMP4A, RAMP5A, RAMP6A, RAMP7A, RAMP8A, RAMP9A, WING10, WING16, WINGEXT
J38230	257AK, 259AK, 257x259AK, RAMP10AK, RAMP11AK, RAMP12AK, RAMP1AK, RAMP2AK, RAMP3AK, RAMP4AK, RAMP5AK, RAMP6AK, RAMP7AK, RAMP8AK, RAMP9AK, WING10K, WING16K, WINGEXT
J39100	176A, 193Ax2/195A, 2548A, 257Ax259A, 2748A, 276A, RAMP1A
J39130	176A, 193Ax2/195A, 2548A, 257Ax259A, 2748A, 276A, RAMP1A
J39135	176A, 176Ax170A, 176Ax171A, 2548A, 2548Ax170A, 2548Ax171A, 257Ax259A, 2748A, 2748Ax270A, 2748Ax271A, 276A, 276Ax270A, 276Ax271A, RAMP1A
J39150	176A, 176Ax170A, 176Ax171A, 2548A, 2548Ax170A, 2548Ax171A, 257Ax259A, 2748A, 2748Ax270A, 2748Ax271A, 276A, 276Ax270A, 276Ax271A, RAMP1A
J52300	154SS, 175SS
J52330	154SS, 175SS, 252x2SSFG, 252x3SSFG, 252x4SSFG, 253x3SSFG, 253x4SSFG, 254x4SSFG
J52339	252x2SSFG, 252x3SSFG, 252x4SSFG, 253x3SSFG, 253x4SSFG, 254x4SSFG
J52390	252x2SSFG, 252x3SSFG, 252x4SSFG, 253x3SSFG, 253x4SSFG, 254x4SSFG
J52393	252x2SSFG, 252x3SSFG, 252x4SSFG, 253x3SSFG, 253x4SSFG, 254x4SSFG

Copyright © 2015-2025, ASSA ABLOY Accessories and Door Controls Group, Inc., an ASSA ABLOY Group company. All rights reserved. Reproduction in whole or in part without the express written permission of ASSA ABLOY Accessories and Door Controls Group, Inc. is prohibited.

PEMKO MODULAR RAMPS

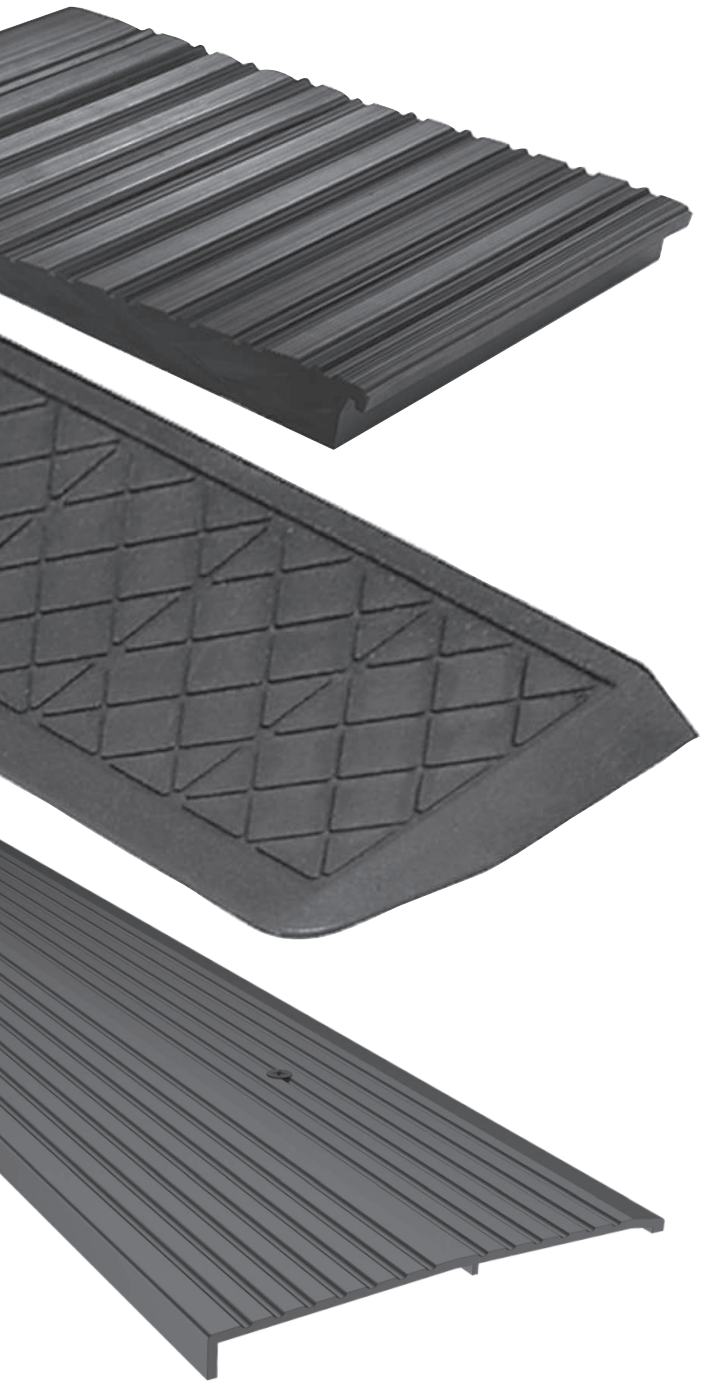

CONTENTS:

Ramp Ordering Information 124
Modular Ramp Threshold Assemblies - Flush Applications 125
Modular Ramp Threshold Assemblies - Offset (7" Top Plate) 126
Modular Ramp Threshold Assemblies - Offset (3½" Top Plate) 127
Modular Ramp Threshold Components 128
Modular Ramp Threshold Assemblies - Variables 129
Risers for Modular Ramps 129
Miter Returns For All Modular Ramp Thresholds 130
Barrier-Free Ramp Thresholds 131
Fire Retardant and Styrene Butadiene Rubber Ramp Thresholds 132
Recycled Rubber Ramp Assembly 133

INDEX:

PRODUCT	PAGE
257	131
257x259	131
259	131
R1.5F	125
R1.5FMR	125
R1.5OS	126
R1.5OSMR	126
R1.5OSS	127
R1.5OSSMR	127
R1.25F	125
R1.25FMR	125
R1.25OS	126
R1.25OSMR	126
R1.25OSS	127
R1.25OSSMR	127
R1.75F	125
R1.75FMR	125
R1.75OS	126
R1.75OSMR	126
R1.75OSS	127
R1.75OSSMR	127
R1F	125
R1FMR	125
R1OS	126
R1OSMR	126
R1OSS	127
R1OSSMR	127
R2.25F	125
R2.25FMR	125
R2F	125
R2FMR	125
R2OS	126
R2OSMR	126
R2OSS	127
R2OSSMR	127
R.5F	125
R.5FMR	125
R.5OS	126
R.5OSMR	126
R.5OSS	127
R.5OSSMR	127
R.75F	125
R.75FMR	125
R.75OS	126
R.75OSMR	126
R.75OSS	127
R.75OSSMR	127
RAMP 1	128
RAMP 2	129
RAMP 3	128
RAMP 4	128
RAMP 5	128
RAMP 6	128
RAMP 7	129
RAMP 8	128
RAMP 8	129
RAMP 9	128
RAMP 10	128
RAMP 11	128
RAMP 12	128
RAMP 13	129
RAMP 14	129
RR1	132
RR1.25FMR	133
RR2	132
RVAR1/A	129
RVAR1/AK	129
RVARIOSS	129
SBR1F	132
SBR1FMR	132
SBR.5F	132
SBR.5FMR	132
WING 10_H	130
WING 16_H	130
WING EXT_H	130

800-824-3018 | www.pemko.com

Check the web site for the up-to-date catalog

Copyright © 2015-2025, ASSA ABLOY Accessories and Door Controls Group, Inc., an ASSA ABLOY Group company. All rights reserved.
Reproduction in whole or in part without the express written permission of ASSA ABLOY Accessories and Door Controls Group, Inc. is prohibited.

PEMKO
ASSA ABLOY

Experience a safer
and more open world

RAMP ORDERING INFORMATION

Flush Applications

Example: R 1 F MR AK

Product	Floor Offset Height	Application	Option	Finish
R = Ramp	.5 = ½"	F = Flushes out to floor offset	MR = Miter Return (1 pair)	A = Aluminum (mill finish) AK = PemKote™ (skid-resistant surface)
	.75 = ¾"			
	1 = 1"			
	1.25 = 1-¼"			
	1.5 = 1-½"			
	1.75 = 1-¾"			
	2 = 2"			
	2.25 = 2-¼"			

Offset Applications - 7" Top Plate

Example: R 1 OS MR AK

Product	Floor Offset Height	Application	Option	Finish
R = Ramp	.5 = ½"	OS = Up & over offset w/ 7" top plate	MR = Miter Return (1 pair)	A = Aluminum (mill finish) AK = PemKote™ (skid-resistant surface)
	.75 = ¾"			
	1 = 1"			
	1.25 = 1-¼"			
	1.5 = 1-½"			
	1.75 = 1-¾"			
	2 = 2"			

Offset Applications - 3½" Top Plate

Example: R 2 OSS MR AK

Product	Floor Offset Height	Application	Option	Finish
R = Ramp	.5 = ½"	OSS = Up & over offset w/ 3-½" top plate	MR = Miter Return (1 pair)	A = Aluminum (mill finish) AK = PemKote™ (skid-resistant surface)
	.75 = ¾"			
	1 = 1"			
	1.25 = 1-¼"			
	1.5 = 1-½"			
	1.75 = 1-¾"			
	2 = 2"			

Copyright © 2015-2025, ASSA ABLOY Accessories and Door Controls Group, Inc., an ASSA ABLOY Group company. All rights reserved. Reproduction in whole or in part without the express written permission of ASSA ABLOY Accessories and Door Controls Group, Inc. is prohibited.

MODULAR RAMP THRESHOLD ASSEMBLIES

- Assemblies accommodate 1/2" to 2 1/4" floor offsets in meeting the 1:12 slope requirements of the "Americans with Disabilities Act". Even higher offsets can be accommodated by using the risers, **RAMP13_** and **RAMP14_**
- "MR" in a product number denotes that one-pair of miter returns (and extenders, if applicable) is included. Otherwise, we recommend filling and feathering the threshold ends with grout. Do not leave threshold ends open
- Miter Returns are available for offsets up to 2 1/4"
- Assemblies are supplied with #10 stainless steel wood screws. Stainless steel machine screws and expansion shields are available at an extra cost
- Assemblies allow for custom fabrication; please consult Pemko Customer Service
- Assemblies are provided NET length
- Miter returns will add 2 pieces to total components; miter returns with extenders will add 4 pieces to total components

PemKote™ is highly recommended for all threshold assemblies, especially exterior conditions where moisture may be present.

Only with PemKote™ Non-Slip Coating

Flush Applications

1/2" Floor Offset

R.5F_
R.5FMR_ **

AVAILABLE FINISHES: **10BE, A, AK, BSP, WSP**
ASSEMBLY LENGTH: 6 1/8"
OF COMPONENTS: 1



3/4" Floor Offset

R.75F_
R.75FMR_ **

AVAILABLE FINISHES: **10BE, A, AK, BSP, WSP**
ASSEMBLY LENGTH: 9 1/4"
OF COMPONENTS: 2



1" Floor Offset

R1F_
R1FMR_ **

AVAILABLE FINISHES: **10BE, A, AK, BSP, WSP**
ASSEMBLY LENGTH: 12 3/8"
OF COMPONENTS: 2



1 1/4" Floor Offset

R1.25F_
R1.25FMR_ **

AVAILABLE FINISHES: **10BE, A, AK, BSP, WSP**
ASSEMBLY LENGTH: 15 1/2"
OF COMPONENTS: 3



1 1/2" Floor Offset

R1.5F_
R1.5FMR_ **

AVAILABLE FINISHES: **10BE, A, AK, BSP, WSP**
ASSEMBLY LENGTH: 18 5/8"
OF COMPONENTS: 3

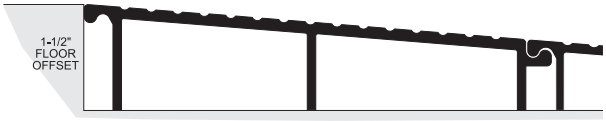

1 3/4" Floor Offset

R1.75F_
R1.75FMR_ **

AVAILABLE FINISHES: **10BE, A, AK, BSP, WSP**
ASSEMBLY LENGTH: 21 3/4"
OF COMPONENTS: 4

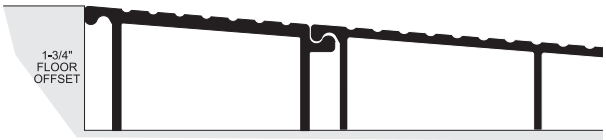

2" Floor Offset

R2F_
R2FMR_ **

AVAILABLE FINISHES: **10BE, A, AK, BSP, WSP**
ASSEMBLY LENGTH: 24 7/8"
OF COMPONENTS: 4



2 1/4" Floor Offset

R2.25F_
R2.25FMR_ **

AVAILABLE FINISHES: **10BE, A, AK, BSP, WSP**
ASSEMBLY LENGTH: 28"
OF COMPONENTS: 5

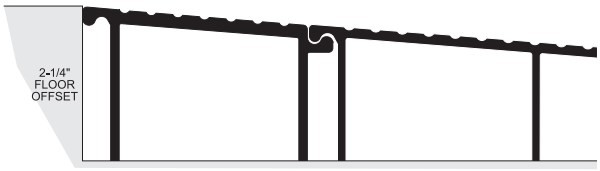

Complete assembly drawings available online
NOTE: Greater offset may be accomplished by using Pemko risers.
**Miter Returns are not ADA Compliant

AVAILABLE FINISHES FOR PRODUCTS SHOWN ON THIS PAGE
10BE (Satin Bronze Powder Coated Aluminum) **A** (Mill Finish Aluminum) **AK** (Mill Finish Aluminum with PemKote™ Non-Slip Coating) **BSP** (Black Suede Powder Coated Aluminum) **WSP** (White Suede Powder Coated Aluminum)

800-824-3018 | www.pemko.com

Check the web site for the up-to-date catalog

Copyright © 2015-2025, ASSA ABLOY Accessories and Door Controls Group, Inc., an ASSA ABLOY Group company. All rights reserved.
Reproduction in whole or in part without the express written permission of ASSA ABLOY Accessories and Door Controls Group, Inc. is prohibited.

PEMKO
ASSA ABLOY
Experience a safer and more open world

OFFSET APPLICATIONS (7" TOP PLATE)

1/2" Floor Offset

R.5OS_
R.5OSMR_ **

AVAILABLE FINISHES: **10BE, A, AK, BSP, WSP**
ASSEMBLY LENGTH*: 16 1/4"
OF COMPONENTS: 3



3/4" Floor Offset

R.75OS_
R.75OSMR_ **

AVAILABLE FINISHES: **10BE, A, AK, BSP, WSP**
ASSEMBLY LENGTH*: 19 3/8"
OF COMPONENTS: 3



1" Floor Offset

R1OS_
R1OSMR_ **

AVAILABLE FINISHES: **10BE, A, AK, BSP, WSP**
ASSEMBLY LENGTH*: 22 1/2"
OF COMPONENTS: 4



1 1/4" Floor Offset

R1.25OS_
R1.25OSMR_ **

AVAILABLE FINISHES: **10BE, A, AK, BSP, WSP**
ASSEMBLY LENGTH*: 25 5/8"
OF COMPONENTS: 4



1 1/2" Floor Offset

R1.5OS_
R1.5OSMR_ **

AVAILABLE FINISHES: **10BE, A, AK, BSP, WSP**
ASSEMBLY LENGTH*: 28 3/4"
OF COMPONENTS: 5



1 3/4" Floor Offset

R1.75OS_
R1.75OSMR_ **

AVAILABLE FINISHES: **10BE, A, AK, BSP, WSP**
ASSEMBLY LENGTH*: 31 7/8"
OF COMPONENTS: 5



2" Floor Offset

R2OS_
R2OSMR_ **

AVAILABLE FINISHES: **10BE, A, AK, BSP, WSP**
ASSEMBLY LENGTH*: 35"
OF COMPONENTS: 6



Complete assembly drawings available online.

NOTE: Greater offset may be accomplished by using Pemko risers.
*Assembly length includes 7" top plate
**Miter Returns are not ADA Compliant



Assembly Shown: **R.5OS**

AVAILABLE FINISHES FOR PRODUCTS SHOWN ON THIS PAGE
10BE (Satin Bronze Powder Coated Aluminum) **A** (Mill Finish Aluminum) **AK** (Mill Finish Aluminum with PemKote™ Non-Slip Coating) **BSP** (Black Suede Powder Coated Aluminum) **WSP** (White Suede Powder Coated Aluminum)

PEMKO
ASSA ABLOY
Experience a safer and more open world

800-824-3018 | www.pemko.com
Check the web site for the up-to-date catalog

Copyright © 2015-2025, ASSA ABLOY Accessories and Door Controls Group, Inc., an ASSA ABLOY Group company. All rights reserved. Reproduction in whole or in part without the express written permission of ASSA ABLOY Accessories and Door Controls Group, Inc. is prohibited.

SHORT OFFSET APPLICATIONS (3½" TOP PLATE)

½" Floor Offset

R.5OSS_
R.5OSSMR_ **

AVAILABLE FINISHES: **10BE, A, AK, BSP, WSP**
ASSEMBLY LENGTH*: 12¾"
OF COMPONENTS: 3



¾" Floor Offset

R.75OSS_
R.75OSSMR_ **

AVAILABLE FINISHES: **10BE, A, AK, BSP, WSP**
ASSEMBLY LENGTH*: 15⅞"
OF COMPONENTS: 3



1" Floor Offset

R1OSS_
R1OSSMR_ **

AVAILABLE FINISHES: **10BE, A, AK, BSP, WSP**
ASSEMBLY LENGTH*: 19"
OF COMPONENTS: 4



1¼" Floor Offset

R1.25OSS_
R1.25OSSMR_ **

AVAILABLE FINISHES: **10BE, A, AK, BSP, WSP**
ASSEMBLY LENGTH*: 22⅛"
OF COMPONENTS: 4



1½" Floor Offset

R1.5OSS_
R1.5OSSMR_ **

AVAILABLE FINISHES: **10BE, A, AK, BSP, WSP**
ASSEMBLY LENGTH*: 25¼"
OF COMPONENTS: 5

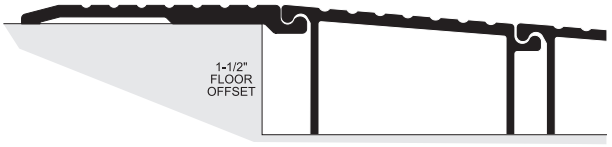

1¾" Floor Offset

R1.75OSS_
R1.75OSSMR_ **

AVAILABLE FINISHES: **10BE, A, AK, BSP, WSP**
ASSEMBLY LENGTH*: 28⅜"
OF COMPONENTS: 5

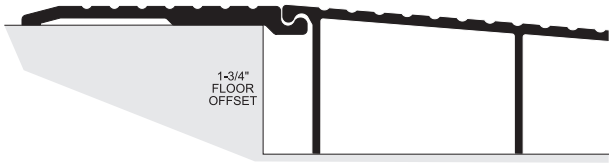

2" Floor Offset

R2OSS_
R2OSSMR_ **

AVAILABLE FINISHES: **10BE, A, AK, BSP, WSP**
ASSEMBLY LENGTH*: 31½"
OF COMPONENTS: 6

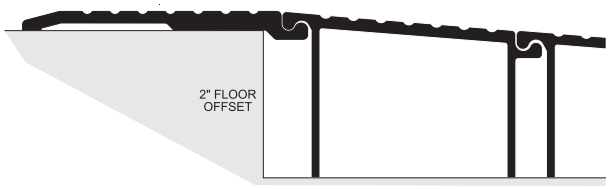

Complete assembly drawings available online.

NOTE: Greater offset may be accomplished by using Pemko risers.
*Assembly length includes 3½" top plate
**Miter Returns are not ADA Compliant

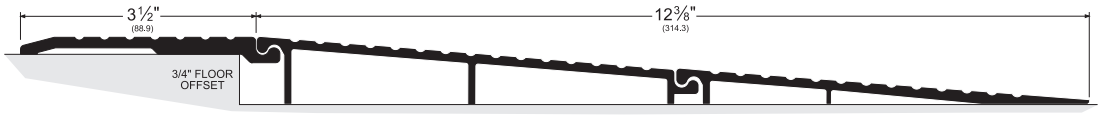

Assembly Shown: **R.75OSS**

AVAILABLE FINISHES FOR PRODUCTS SHOWN ON THIS PAGE
10BE (Satin Bronze Powder Coated Aluminum) **A** (Mill Finish Aluminum)
AK (Mill Finish Aluminum with PemKote™ Non-Slip Coating) **BSP** (Black Suede Powder Coated Aluminum)
WSP (White Suede Powder Coated Aluminum)

800-824-3018 | www.pemko.com

Check the web site for the up-to-date catalog

Copyright © 2015-2025, ASSA ABLOY Accessories and Door Controls Group, Inc., an ASSA ABLOY Group company. All rights reserved.
Reproduction in whole or in part without the express written permission of ASSA ABLOY Accessories and Door Controls Group, Inc. is prohibited.

PEMKO
ASSA ABLOY
Experience a safer and more open world

MODULAR RAMP THRESHOLD COMPONENTS

- Components are generally sold as part of assemblies
- Ramp Assemblies consist of interlocking components, eliminating the need to weld joints. Interlocking ball-joint design allows each component to flex and conform to uneven surfaces
- All assemblies carry the following labels:
- PemKote™ is highly recommended for all threshold assemblies, especially exterior conditions where moisture may be present

NOTE: The following pages are for component identification only. Do not order from these pages. Order only complete assemblies from pages 140 to 142

TOP PLATES

RAMP8_
Short top plate
AVAILABLE FINISHES: **10BE, A, AK, BSP, WSP**

RAMP1_
Top plate
AVAILABLE FINISHES: **10BE, A, AK, BSP, WSP**

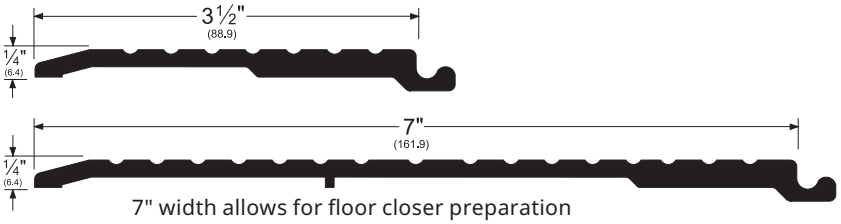

7" width allows for floor closer preparation

BRIDGES

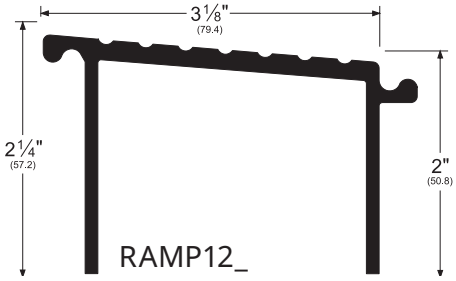

RAMP12_
AVAILABLE FINISHES: **10BE, A, AK, BSP, WSP**

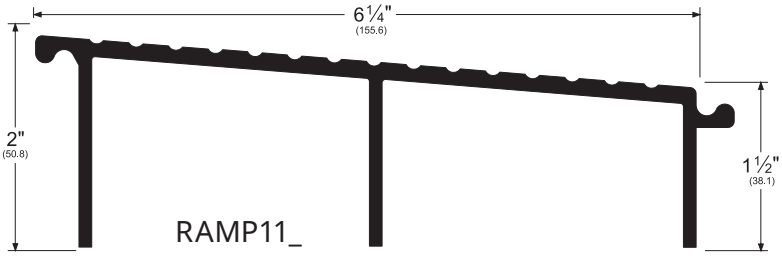

RAMP11_
AVAILABLE FINISHES: **10BE, A, AK, BSP, WSP**

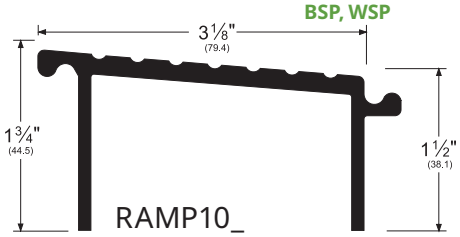

RAMP10_
AVAILABLE FINISHES: **10BE, A, AK, BSP, WSP**

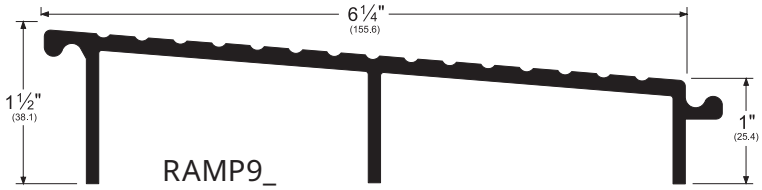

RAMP9_
AVAILABLE FINISHES: **10BE, A, AK, BSP, WSP**

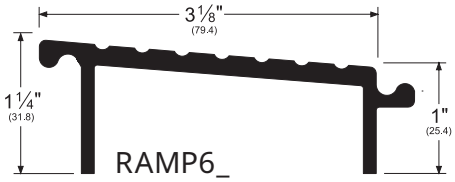

RAMP6_
AVAILABLE FINISHES: **10BE, A, AK, BSP, WSP**

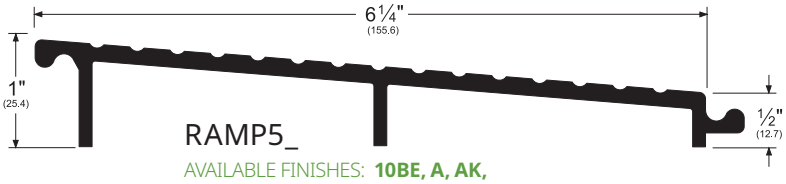

RAMP5_
AVAILABLE FINISHES: **10BE, A, AK, BSP, WSP**

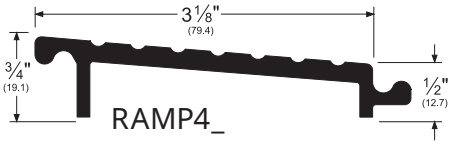

RAMP4_
AVAILABLE FINISHES: **10BE, A, AK, BSP, WSP**

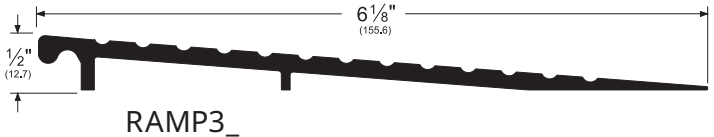

RAMP3_
AVAILABLE FINISHES: **10BE, A, AK, BSP, WSP**

NOTE: Products shown in this section are not drawn to scale.

AVAILABLE FINISHES FOR PRODUCTS SHOWN ON THIS PAGE
10BE (Satin Bronze Powder Coated Aluminum) **A** (Mill Finish Aluminum) **AK** (Mill Finish Aluminum with PemKote™ Non-Slip Coating) **BSP** (Black Suede Powder Coated Aluminum) **WSP** (White Suede Powder Coated Aluminum)

PEMKO
ASSA ABLOY
Experience a safer and more open world

800-824-3018 | www.pemko.com
Check the web site for the up-to-date catalog

Copyright © 2015-2025, ASSA ABLOY Accessories and Door Controls Group, Inc., an ASSA ABLOY Group company. All rights reserved. Reproduction in whole or in part without the express written permission of ASSA ABLOY Accessories and Door Controls Group, Inc. is prohibited.

MODULAR RAMP THRESHOLD ASSEMBLIES - VARIABLES

- Use a "Variable" component to accommodate offsets from 1/2" to 1 1/4". These meet the 1:8 maximum slope allowance (ADA) for existing buildings. For new construction, this assembly is only ADA compliant in certain applications as outlined by the current ADA standard
- May require a variance from some state building codes, even though ADA compliant
- Ideal for use in cross traffic corridors where a minimal ramp projection may be required and a steeper slope may be allowed. Supplied with #10 stainless steel sheet metal screws. Stainless steel machine screws and expansion shields are available at an extra cost
- Miter returns are not available due to the variable angle of this ramp. Please fill and feather the threshold ends. Do not leave threshold ends open
- This variable ramp is supplied un-drilled from Pemko. Due to the variance in the angle, it must be drilled in the field. For proper installation, it requires the **RAMP7_** to be placed under **RAMP2_** after the assembly is in place, then must be match drilled and anchored through both components
- PemKote™ is highly recommended for all ramp threshold assemblies especially exterior conditions where moisture may be present
- In addition to ADA compliance, outlined previously, all assemblies carry the following labels: BHMA 10C CERTIFIED

RVARIOSS_

AVAILABLE FINISHES: **10BE, A, AK, BSP, WSP**

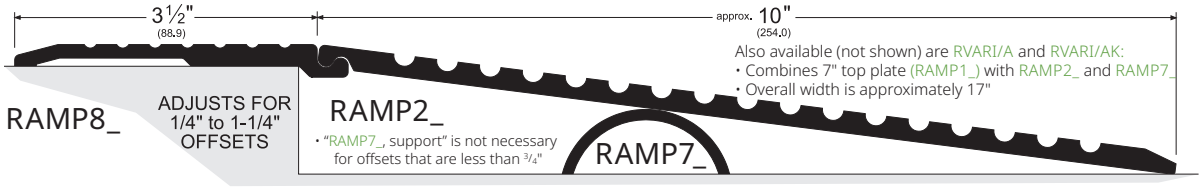

VARIABLE RAMP COMPONENTS

RAMP2_

variable

AVAILABLE FINISHES: **10BE, A, AK, BSP, WSP**

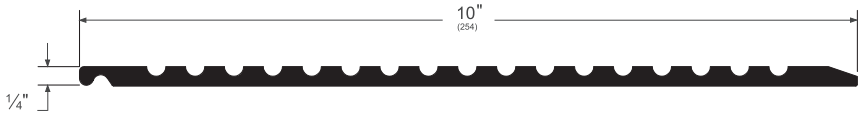

RAMP7_

support for variable

AVAILABLE FINISHES: **A**

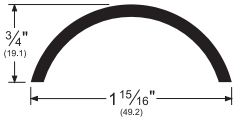

RISERS FOR MODULAR RAMPS

- Risers easily attach to the legs of Pemko's Modular Ramp Systems. Each adds 1/2" in height to accommodate offsets greater than 2 1/4"
- Contact Pemko Customer Service for information on stacking risers to reach desired height

RAMP13_

AVAILABLE FINISHES: **A**

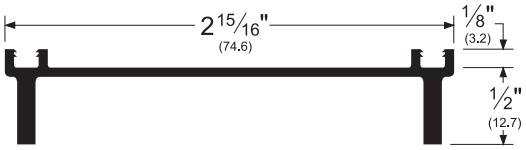

RAMP14_

AVAILABLE FINISHES: **A**

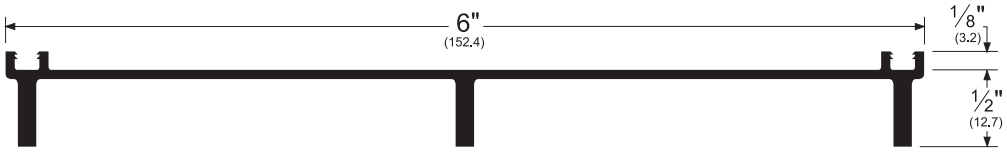

NOTE: Products shown in this section are not drawn to scale.

AVAILABLE FINISHES FOR PRODUCTS SHOWN ON THIS PAGE
10BE (Satin Bronze Powder Coated Aluminum) **A** (Mill Finish Aluminum) **AK** (Mill Finish Aluminum with PemKote™ Non-Slip Coating) **BSP** (Black Suede Powder Coated Aluminum) **WSP** (White Suede Powder Coated Aluminum)

Copyright © 2015-2025, ASSA ABLOY Accessories and Door Controls Group, Inc., an ASSA ABLOY Group company. All rights reserved.
Reproduction in whole or in part without the express written permission of ASSA ABLOY Accessories and Door Controls Group, Inc. is prohibited.

PEMKO
ASSA ABLOY
Experience a safer and more open world

MITER RETURNS FOR ALL MODULAR RAMP THRESHOLDS

- Cast aluminum "wings" fit into end of modular ramp threshold assembly and are fastened to ramp mid sections with self-tapping machine screws
- Neat, compact, and tight-fitting design replaces former mitering methods
- Miter Returns are match-drilled with each assembly
- Miter Returns are not "ADA" compliant
- Miter Returns are handed from the low end and are determined by which side of the ramp it fits into

BHMA CERTIFIED

WING10_H_

AVAILABLE FINISHES: **A, AK**

- WING10 can be trimmed to fit ramp assembly (dotted lines show cut down for use with R.5FMR_)

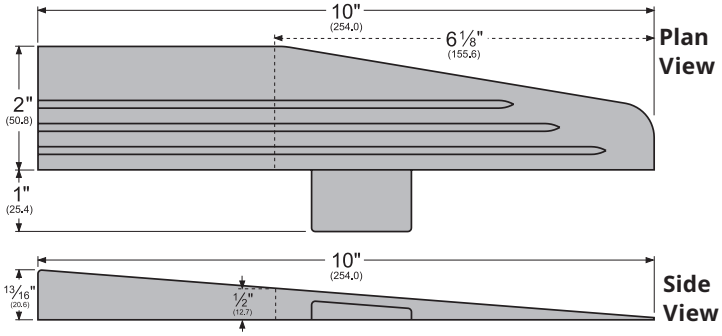

WING10RH_

(right-hand shown)

End View

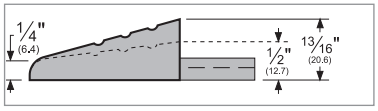

View from high-end

WING16_H_

AVAILABLE FINISHES: **A, AK**

- WING16 can be trimmed to fit ramp assembly (dotted lines show cut down for use with **R1FMR**_)

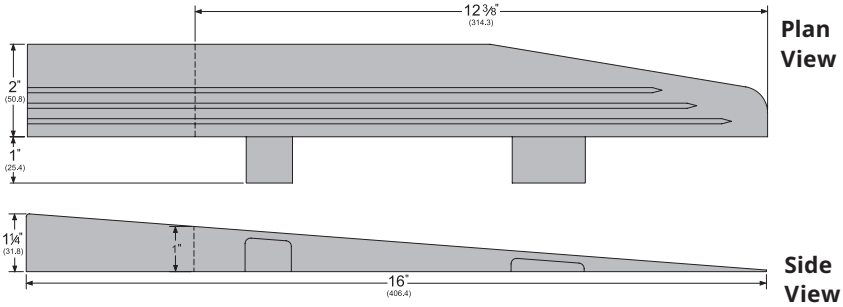

WING16RH_

(right-hand shown)

End View

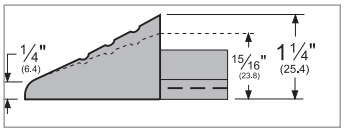

View from high-end

WINGEXT_H_

AVAILABLE FINISHES: **A, AK**

- WINGEXT are included with assemblies to completely fill ends for 2" offset or 2¼" flush conditions
  WINGEXT works in conjunction with WING16 for these higher offset conditions

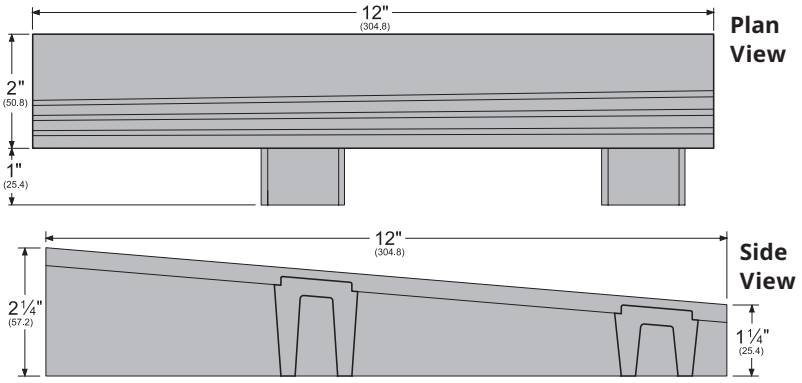

WINGEXTRH_

(right-hand shown)

End View

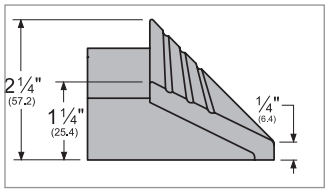

View from high-end

See flyer on the Literature page of www.assaaabloydooraccessories.us for WING cut-down chart.

AVAILABLE FINISHES FOR PRODUCTS SHOWN ON THIS PAGE
A (Mill Finish Aluminum) **AK** (Mill Finish Aluminum with PemKote™ Non-Slip Coating)

Copyright © 2015-2025, ASSA ABLOY Accessories and Door Controls Group, Inc., an ASSA ABLOY Group company. All rights reserved. Reproduction in whole or in part without the express written permission of ASSA ABLOY Accessories and Door Controls Group, Inc. is prohibited.

BARRIER-FREE RAMP THRESHOLDS

- The modular ramp thresholds are an improvement over the **257/259** however, **257/259** will remain available for special requirements
- Use **257_** and **259_** together, or use **257_** with an abutted 1:12 concrete slope
- When used as a cover plate assembly (see Commercial Thresholds section), a longer spindle may be required
- Ramps on this page are not ADA compliant when used at a door opening
- The **257_** is not ADA compliant when used alone.
- PemKote™ is highly recommended for all threshold assemblies, especially exterior conditions where moisture may be present

257x259_

AVAILABLE FINISHES: **10BE, A, AK, BSP, WSP**

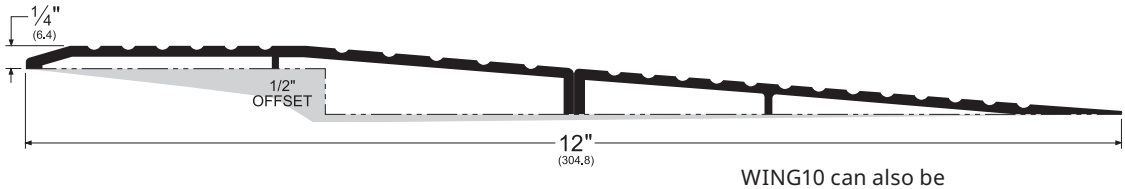

WING10 can also be used

BHMA CERTIFIED

259_

AVAILABLE FINISHES: **10BE, A, AK, BSP, WSP**

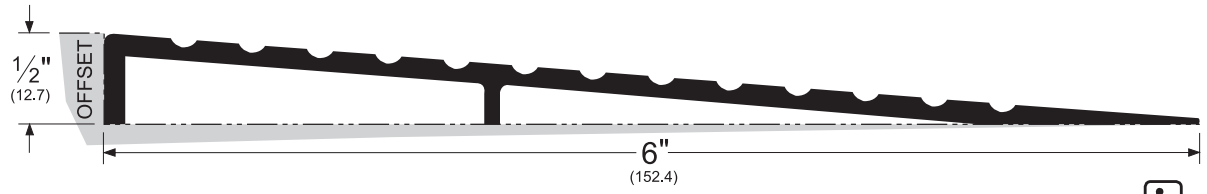

BHMA CERTIFIED

257_

AVAILABLE FINISHES: **10BE, A, AK, BSP, WSP**

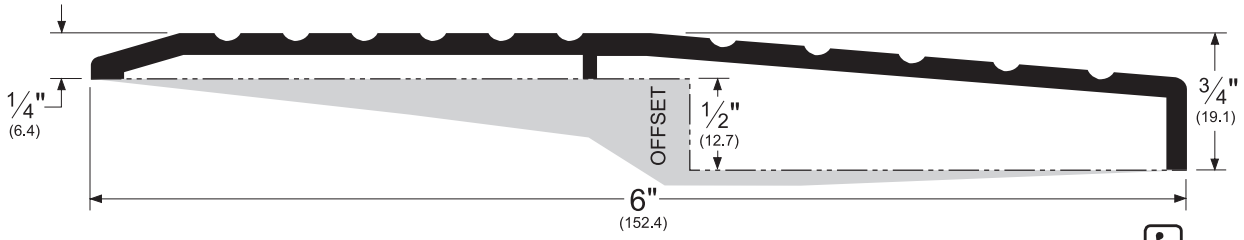

BHMA CERTIFIED

NOTE: Products shown in this section are not drawn to scale.

AVAILABLE FINISHES FOR PRODUCTS SHOWN ON THIS PAGE
10BE (Satin Bronze Powder Coated Aluminum) **A** (Mill Finish Aluminum)
AK (Mill Finish Aluminum with PemKote™ Non-Slip Coating) **BSP** (Black Suede Powder Coated Aluminum)
WSP (White Suede Powder Coated Aluminum)

Copyright © 2015-2025, ASSA ABLOY Accessories and Door Controls Group, Inc., an ASSA ABLOY Group company. All rights reserved.
Reproduction in whole or in part without the express written permission of ASSA ABLOY Accessories and Door Controls Group, Inc. is prohibited.

PEMKO
ASSA ABLOY
Experience a safer and more open world

FIRE RETARDANT AND STYRENE BUTADIENE RUBBER RAMP THRESHOLDS

- Rubber ramps meet the requirements of **ADAAG-2010; IBC/ANSI A117.1; and California Title 24, Part 2**
- Styrene butadiene rubber ramps are weather, ozone, abrasion, and impact resistant; long-lasting and fire retardant
- Rubber ramps are sold in one foot increments up to 15-foot lengths
- Rubber ramps can be butted together for longer lengths
- Rubber ramps are cut square on each end but are available with molded rubber miter returns. To receive a pair of miter returns, add "**MR**" to the part number (example: **SBR.5FMR**)
- Rubber ramps have a superior grip, anti-slip surface and a "**no bump**" tapered lead edge. Rubber ramps are classified by Underwriters Laboratories, Inc.,® as a skid-resistant floor surface per **UL standard for safety, UL410.** Rubber ramps also meet the requirements of **ASTM D 2047** and **Federal Specification P-F-430C**
- Rubber ramps are easy to install on most surfaces by using a construction adhesive. Mechanical fasteners are not required and not recommended
- Rubber ramps are also portable. For temporary applications, an assembly stays in place by its sheer weight and can be removed from one opening and placed at another opening
- Use an adhesive (caulk) suitable for use with plastics and your flooring material for proper installation and adhesion
- Rubber ramps are available for ½" and 1" offset heights
- Rubber ramps can be cross-cut to length or ripped to a custom offset height using a table or radial arm saw with a carbide-tipped blade. These modifications must be made in the field

SBR1F
SBR1FMR **

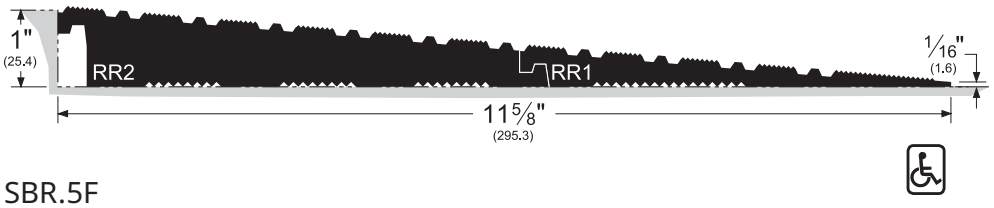



Assembly consists of two inter-locking components.

SBR.5F
SBR.5FMR **
RR1

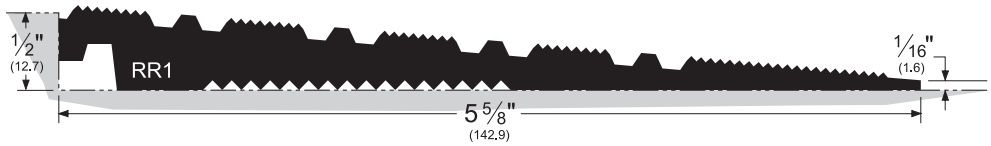

RR2

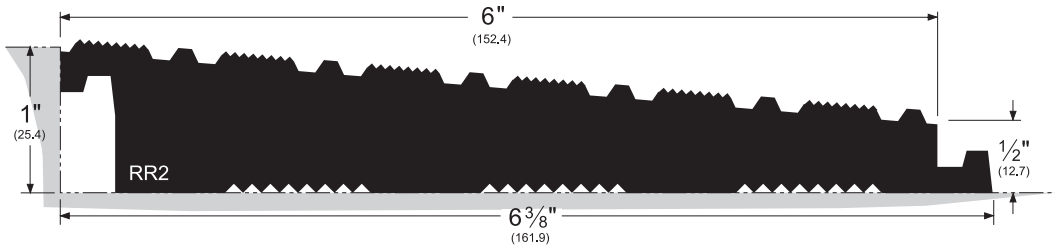

This component (**RR2**) is not ADA compliant when used by itself.

NOTE: Products shown in this section are not drawn to scale.

** = Miter Returns are not ADA compliant

PEMKO
ASSA ABLOY
Experience a safer and more open world

800-824-3018 | www.pemko.com
Check the web site for the up-to-date catalog

Copyright © 2015-2025, ASSA ABLOY Accessories and Door Controls Group, Inc., an ASSA ABLOY Group company. All rights reserved. Reproduction in whole or in part without the express written permission of ASSA ABLOY Accessories and Door Controls Group, Inc. is prohibited.

RECYCLED RUBBER RAMP ASSEMBLY

- ADA Compliant, based on application
- Meets: **UL410, ASTM D2047, Federal Specification P-F-430C**
- Recycled Rubber Ramp Assemblies meet **IBC/ANSI A117.1-2013**
- Made from #20 mesh minus crumb rubber (with urethane binders) reclaimed from 100% recycled rubber automotive tires
- Use an adhesive (caulk) suitable for use with plastics and your flooring material for proper installation and adhesion. Avoid Liquid Nails with Rubber Ramps
- Using ordinary tools, trim to fit your application
- Can be ripped for offsets less than 1¼"
- Plane bottom surface of ramp to accommodate irregular surface conditions
- Miter returns are molded into the design of the Recycled Rubber Ramp
- 36" and 60" ramps are supplied as one (1) piece assemblies
- 48" and 72" ramps are supplied as two (2) piece assemblies
- Dimensions are nominal and can vary by as much as one inch. This is acceptable as long as the two halves match

Ordering Chart

Other sizes are available, please contact Pemko Customer Service.

PART #	WIDTH "A" (door opening)	WIDTH "B" (total width)
RR1.25FMR36	36"	41"
RR1.25FMR48	48"	53"
RR1.25FMR60	60"	65"
RR1.25FMR72	72"	77"
RR1.25FMR96	96"	101"

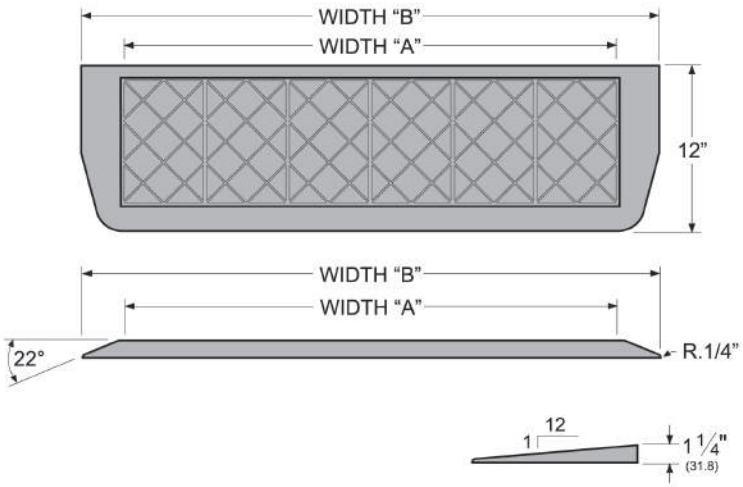

Copyright © 2015-2025, ASSA ABLOY Accessories and Door Controls Group, Inc., an ASSA ABLOY Group company. All rights reserved.
Reproduction in whole or in part without the express written permission of ASSA ABLOY Accessories and Door Controls Group, Inc. is prohibited.

PEMKO
ASSA ABLOY
Experience a safer and more open world

800-824-3018 | www.pemko.com
Check the web site for the up-to-date catalog

Copyright © 2015-2025, ASSA ABLOY Accessories and Door Controls Group, Inc., an ASSA ABLOY Group company. All rights reserved.
Reproduction in whole or in part without the express written permission of ASSA ABLOY Accessories and Door Controls Group, Inc. is prohibited.

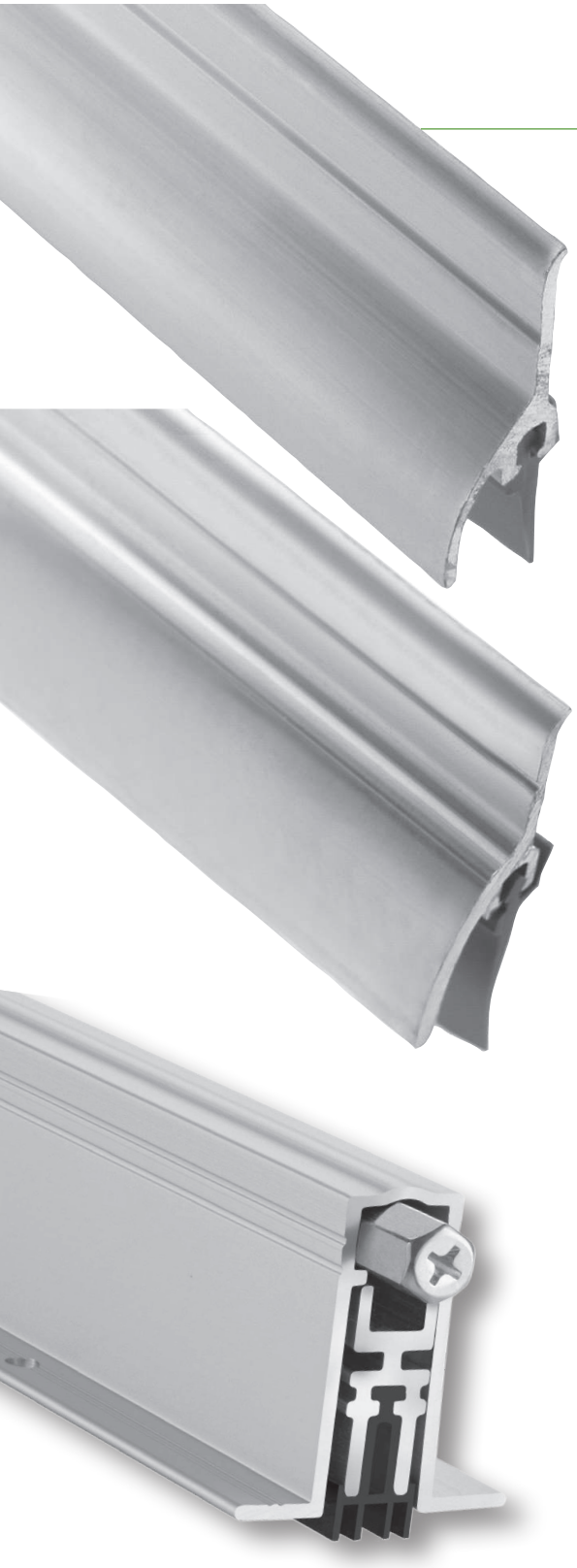

PEMKO DOOR BOTTOMS

CONTENTS:

Automatic Door Bottoms 136
Residential Automatic Door Bottoms 140
End Plates for Automatic Door Bottoms 141
Excessive Gap Door Bottom Solutions 142
Excessive Gap Door Top Solutions 142
Eco-V™ Door Shoes 142
Door Shoes 143
Thermally Broken Door Shoe 145
Door Sweeps for Hollow Metal Doors 146
Fabrication Options for Door Shoes 146
Door Bottom Sweeps 147
Stainless Steel Door Bottom Sweeps 151
Specialty Door Bottoms 152
Door Top Weatherstrip 152

INDEX:

PRODUCT	PAGE
56	148
57	148
68	152
209	143
210	143
211	143
215	143
216	143
216_FG	145
217	143
221	145
222	146
223	144
234	143
307	148
308	148
313	152
314	152
315	147
315SS	151
317	152
321	147
321SS	151
325XGSS	142
344	152
345	148
345	149
346	152
347	152
368	147
405	140
411	139
412	138
420	139
434	139
2113	144
2170	142
2173	144
2211	145
2212	145
2221	146
2343	144
3151	147
3151SS	151
3452	148
3452	149
3692	144
4131	138
4301	138
18061	149
18100	149
18100_NBE	150
18137	149
90062	149
90100	149
90100_NBE	150
293100_NB	149
293100_NBE	150
293100_V	150
EGA305xG	142
EV80	142
K411	141
K412	141
K420	141
K435	141
K435-PREM	141
K436	141
K4133	141
K4301	141
SA1	140
SA2	140
SA3	140
SA4	140
STC411	137
STC4131	137
XG2212	142

800-824-3018 | www.pemko.com

Check the web site for the up-to-date catalog

Copyright © 2015-2025, ASSA ABLOY Accessories and Door Controls Group, Inc., an ASSA ABLOY Group company. All rights reserved.
Reproduction in whole or in part without the express written permission of ASSA ABLOY Accessories and Door Controls Group, Inc. is prohibited.

PEMKO
ASSA ABLOY

Experience a safer
and more open world

AUTOMATIC DOOR BOTTOMS

- All Pemko Automatic Door Bottoms, 24" and up, can be manufactured for field alteration. Please specify when ordering: Allow 2" for field trimming
- Overall sizes range from 12" to 72". Sizes between 12" and 23.9" will be supplied at absolute NET length and will have no room for field trimming.
- 0.0625" Lead-lining available upon request; contact Pemko Customer Service for options on profiles
- Provided with end plate kits (except 420, SA, and 405V models) which include wood screws. Tek screws are available for mounting to hollow metal doors.
- See Planet Automatic Door Bottoms for additional models made by ASSA ABLOY Schweisse and offered in the U.S.A. by Pemko.

IMPORTANT DROP BAR INFORMATION

Drop seals of all types are designed to close a uniform size gap. Pemko drop seals can seal up to ¾" gaps (420 model can seal up to ½" gap), provided the gap is consistent. Gaps that start at less than ¾" and then grow cannot be closed. The drop seal utilizes a straight aluminum extrusion so it cannot close an inconsistent gap.Plunger extension to drop dimension is 1:1 (i.e., a ¼" extension on the plunger will equal a ¼" drop of the drop bar).

DROP-BAR SEAL ACTUATION

The drop bar mechanism prevents the seal from skidding along the floor/threshold while the door is being closed.

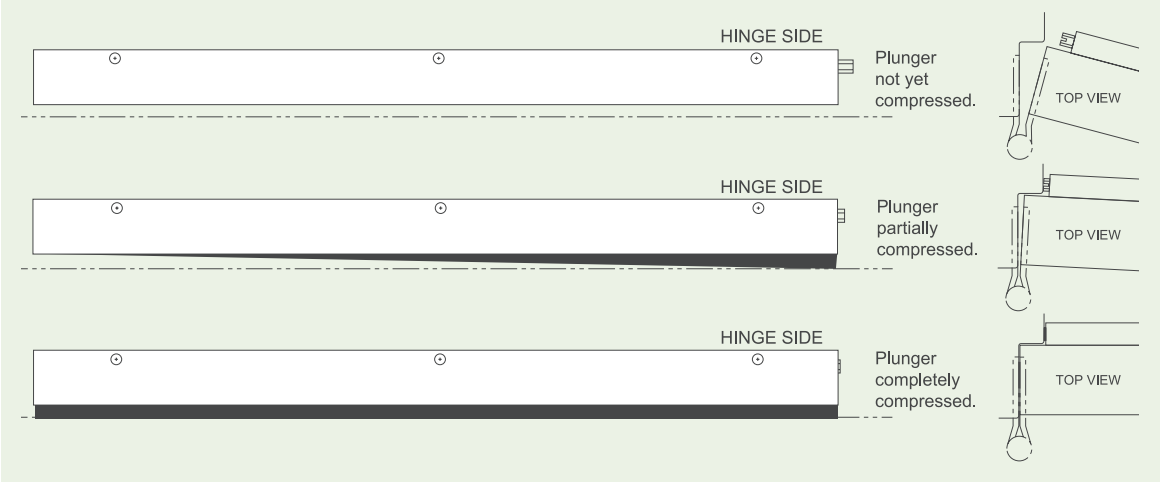

PEMKO
ASSA ABLOY
Experience a safer and more open world

Copyright © 2015-2025, ASSA ABLOY Accessories and Door Controls Group, Inc., an ASSA ABLOY Group company. All rights reserved. Reproduction in whole or in part without the express written permission of ASSA ABLOY Accessories and Door Controls Group, Inc. is prohibited.

AUTOMATIC DOOR BOTTOMS - ACOUSTIC

- Non-handed
- Recommended gap under door is 3/8" for optimal acoustic performance; max drop is 3/4"
- Internal mechanism allows bar to accommodate slight imperfections in floor materials
- STC411 end plate kit is K435; for doors narrower than 1-3/4", specify end plate kit K411
- STC4131 end plate kit is K4133C for Clear Anodized and K4133D for Dark Bronze Anodized

STC411_PK

AVAILABLE FINISHES: **A**
REPLACEMENT INSERT: **PK4111 (BL)**
ANSI: **R3G324, R3G325**

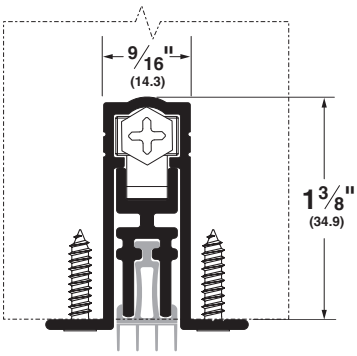

STC4131_PK

AVAILABLE FINISHES:
10BE, BSP, C, D, WSP
REPLACEMENT INSERT: **PK4111 (BL)**
ANSI: **R3G334, R3G335, R3G344, R3G345**

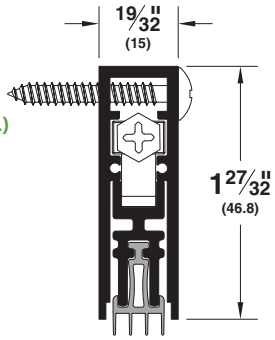

NOTE: STC411_PK Automatic Door Bottom is now included in PEMKOSTCSET-1 (A through E). Please see Acoustic Products section for more information.

NOTE: Products shown in this section may not be drawn to scale.

AVAILABLE FINISHES FOR PRODUCTS SHOWN ON THIS PAGE
10BE (Satin Bronze Powder Coated Aluminum) **A** (Mill Finish Aluminum) BSP (Black Suede Powder Coated Aluminum)
C (Clear Anodized) **D** (Dark Bronze Anodized) **WSP** (White Suede Powder Coated Aluminum)

Copyright © 2015-2025, ASSA ABLOY Accessories and Door Controls Group, Inc., an ASSA ABLOY Group company. All rights reserved.
Reproduction in whole or in part without the express written permission of ASSA ABLOY Accessories and Door Controls Group, Inc. is prohibited.

PEMKO
ASSA ABLOY
Experience a safer and more open world

AUTOMATIC DOOR BOTTOMS - SURFACE AND SEMI-MORTISE MODELS

- Specify if the Automatic Door Bottom is for a semi-mortise application so that shorter screws can be provided
- Recommended gap under door is ½;" maximum drop is ¾"
- 4301 end plate kit is K436 for surface mounted applications
- 4131 end plate kit is K4133
- 412 end plate kit is K412R1

4301_NBL

AVAILABLE FINISHES: **BSP, C, D**
REPLACEMENT INSERT: **P516062 (BL, GR, W)**
ANSI: **R3A334, R3A335, R3A344, R3A345**

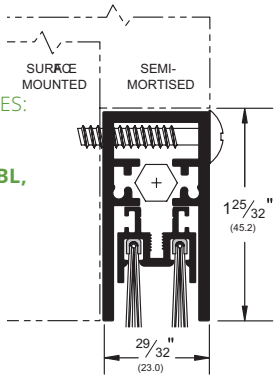

nylon brush (**NB**)

4301_PKL

AVAILABLE FINISHES: **BSP, C, D**
REPLACEMENT INSERT: **PK4304 (BL)**
ANSI: **R3G334, R3G335, R3G344, R3G345**

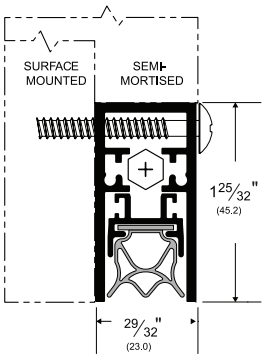

PemkoPrene™ (**PK**)

4131_NBL

AVAILABLE FINISHES: **BSP, C, D, SN**
REPLACEMENT INSERT: **P516041 (BL, GR)**
ANSI: **R3A334, R3A335, R3A344, R3A345**

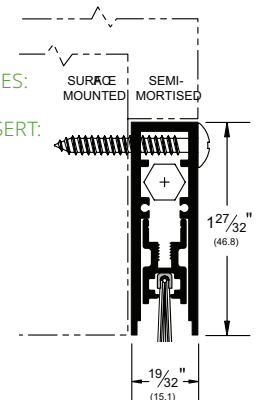

nylon brush (**NB**)

4131_RL

AVAILABLE FINISHES: **BSP, C, D, SN**
REPLACEMENT INSERT: **E7 (BL)**
ANSI: **R3G334, R3G335, R3G344, R3G345**

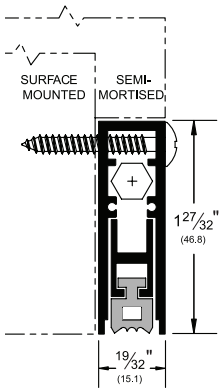

sponge EPDM (**R**)

412_NBL

AVAILABLE FINISHES: **B, BSP, C, D, S**
REPLACEMENT INSERT: **P516041 (BL, GR)**
ANSI: **R3A334, R3A335**

- Surface mounted application
- Handed and disassembly of the mechanism is required to reverse the hand

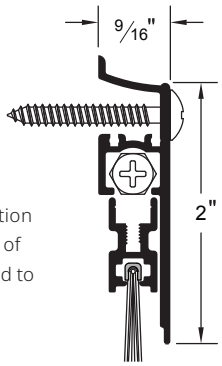

nylon brush (**NB**)

412_RL

AVAILABLE FINISHES: **B, BSP, C, D, S**
REPLACMENT INSERT: **E7 (BL)**
ANSI: **R3G334, R3G335**

- Surface mounted application
- Handed and disassembly of the mechanism is required to reverse the hand

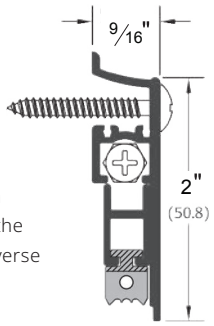

sponge EPDM (**R**)

Alternate Insert For 4301

4301_RL

AVAILABLE FINISHES: **BSP, C, D**
REPLACEMENT INSERT: **E4303 (BL)**
ANSI: **R3G334, R3G335, R3G344, R3G345**

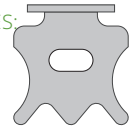

sponge EPDM (**R**)

Alternate Inserts For 4131

4131_PKL

AVAILABLE FINISHES: **BSP, C, D, SN**
REPLACEMENT INSERT: **PK4132 (BL)**
ANSI: **R3G334, R3G335, R3G344, R3G345**

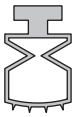

PemkoPrene™ (**PK**)

4131_SL

AVAILABLE FINISHES: **BSP, C, D, SN**
REPLACEMENT INSERT: **SR6 (BL)**
ANSI: **R3E334, R3E335, R3E344, R3E345**

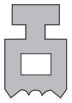

sponge silicone (**S**)

Alternate Inserts For 412

412_SL

AVAILABLE FINISHES: **B, BSP, C, D, S**
REPLACEMENT INSERT: **SR6 (BL)**
ANSI: **R3E334, R3E335**

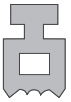

sponge silicone (**S**)

412_PKL

AVAILABLE FINISHES: **B, BSP, C, D, S**
REPLACEMENT INSERT: **PK4132 (BL)**
ANSI: **R3G334, R3G335**

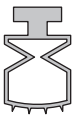

PemkoPrene™ (**PK**)

All above products

NOTE: Products shown in this section may not be drawn to scale.

AVAILABLE FINISHES FOR PRODUCTS SHOWN ON THIS PAGE
B (Cladded Brass Shell) **BSP** (Black Suede Powder Coated Aluminum) **C** (Clear Anodized)
D (Dark Bronze Anodized) **S** (Cladded Stainless Steel) **SN** (Satin Nickel Anodized)

PEMKO ASSA ABLOY
Experience a safer and more open world
Copyright © 2015-2025, ASSA ABLOY Accessories and Door Controls Group, Inc., an ASSA ABLOY Group company. All rights reserved. Reproduction in whole or in part without the express written permission of ASSA ABLOY Accessories and Door Controls Group, Inc. is prohibited.

AUTOMATIC DOOR BOTTOMS - FULL-MORTISE MODELS

- Recommended drop is ½"; maximum drop is ¾", except where noted
- 411 and 434 end plate kit is K435. When using 411 model on doors narrower than 1 ¾", specify end plate kit K411
- 420 is used on hollow metal doors and does not come with end plates; requires a hole for the plunger to extend through in the hinge side door edge.

434_NBL

AVAILABLE FINISH: A
REPLACEMENT INSERT: **P516062 (BL, GR, W)**
ANSI: **R3A324, R3A325**

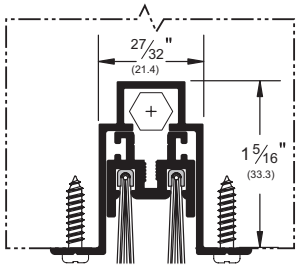

nylon brush (**NB**)

434_RL

AVAILABLE FINISH: **A**
REPLACEMENT INSERT: **E4303 (BL)**
ANSI: **R3G324, R3G325**

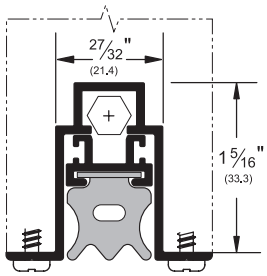

sponge EPDM (**R**)

411_NBL

AVAILABLE FINISH: **A**
REPLACEMENT INSERT: **P516041 (BL, GR)**
ANSI: **R3A324, R3A325**

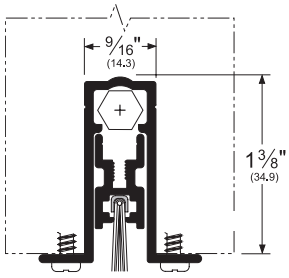

nylon brush (**NB**)

411_RL

AVAILABLE FINISH: **A**
REPLACEMENT INSERT: **E7 (BL)**
ANSI: **R3G324, R3G325**

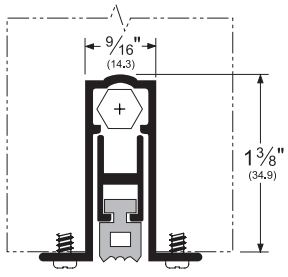

sponge EPDM (**R**)

420_PKL

AVAILABLE FINISH: **A**
REPLACEMENT INSERT: **PK4 (BL, GR)**
ANSI: **R3G324, R3G325**

- For hollow metal doors maximum drop is 1/2"
- Recommended drop is 3/8"

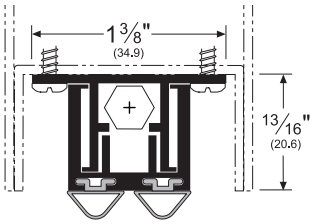

PemkoPrene™ (**PK**)

Alternate Inserts For 434

434_PKL

AVAILABLE FINISH: **A**
REPLACEMENT INSERT: **PK4304 (BL)**
ANSI: **R3G324, R3G325**



PemkoPrene™ (**PK**)

Alternate Inserts For 411

411_PKL

AVAILABLE FINISH: **A**
REPLACEMENT INSERT: **PK4132 (BL)**
ANSI: **R3G324, R3G325**

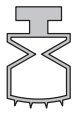

PemkoPrene™ (**PK**)

411_SL

AVAILABLE FINISHES: **A**
REPLACEMENT INSERT: **SR6 (BL)**
ANSI: **R3E324, R3E325**

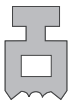

sponge silicone (**S**)

Alternate Inserts For 420

420_VL

AVAILABLE FINISH: **A**
REPLACEMENT INSERT: **EV41 (BL, GR, W)**



Eco-V™ (**V**)

NOTE: Products shown in this section may not be drawn to scale.

AVAILABLE FINISHES FOR PRODUCTS SHOWN ON THIS PAGE
A (Mill Finish Aluminum)

Copyright © 2015-2025, ASSA ABLOY Accessories and Door Controls Group, Inc., an ASSA ABLOY Group company. All rights reserved.
Reproduction in whole or in part without the express written permission of ASSA ABLOY Accessories and Door Controls Group, Inc. is prohibited.

PEMKO
ASSA ABLOY
Experience a safer and more open world

RESIDENTIAL AUTOMATIC DOOR BOTTOMS

SA1, SA2, SA3, SA4

AVAILABLE FINISHES: **A** (no finish selection), **D**
AVAILABLE LENGTHS: ***28", 32", 36", 42"***
REPLACEMENT INSERT: **EV5 (BL)**

- Surface type for wood doors
- 1/2"maximum drop
- Can be trimmed down by as much as 2"
- Non-handed
- End plates are not provided

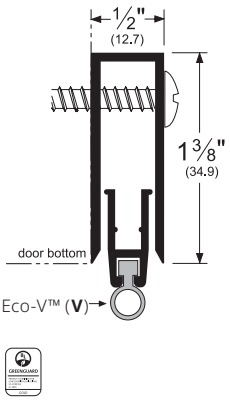

405_V

AVAILABLE FINISHES: **C**
REPLACEMENT INSERT: **EV43 (BL, GR)**

- Spring loaded door bottom sweep
- Available in 36" length only
- May be cut down to 24" minimum length

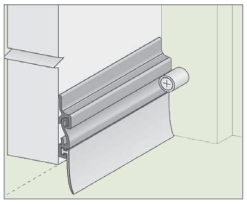

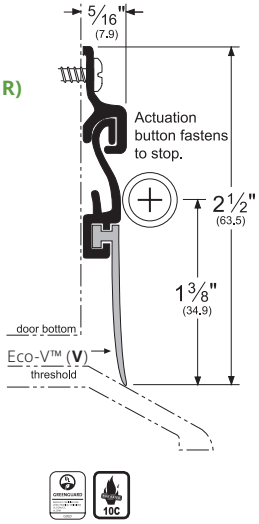

NOTE: Products shown in this section may not be drawn to scale.

AVAILABLE FINISHES FOR PRODUCTS SHOWN ON THIS PAGE
A (Mill Finish Aluminum) **C** (Clear Anodized)
D (Dark Bronze Anodized) **PW** (Painted White)

Copyright © 2015-2025, ASSA ABLOY Accessories and Door Controls Group, Inc., an ASSA ABLOY Group company. All rights reserved. Reproduction in whole or in part without the express written permission of ASSA ABLOY Accessories and Door Controls Group, Inc. is prohibited.

END PLATES FOR AUTOMATIC DOOR BOTTOMS

- Metal end plates are provided to protect the mechanism and to give a clean, aesthetic appearance. Do not tighten with power tool
- Plunger end plate prevents the plunger adjustment from rotating
- Necessary fasteners are provided with End Plate kits; color corresponds with case color
- All end plates are black in color

411 and STC411® End Plates Mortise

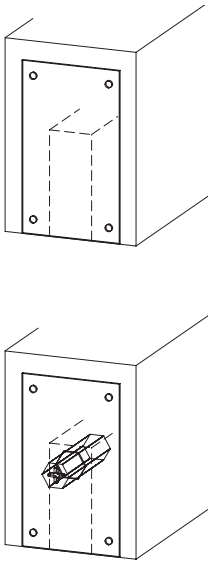

434 End Plates Mortise

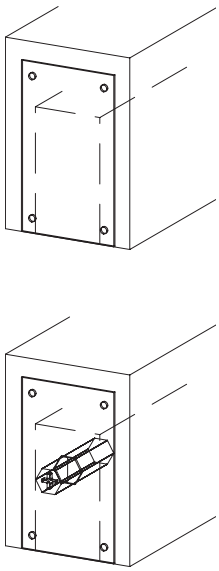

4131 and STC4131® Auto Door Bottom Semi-Mortise*

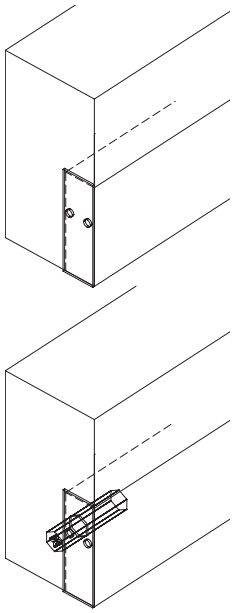

4301 Auto Door Bottom Semi-Mortise*

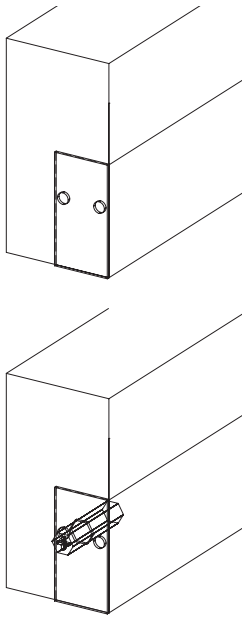

412 New Style End Plates

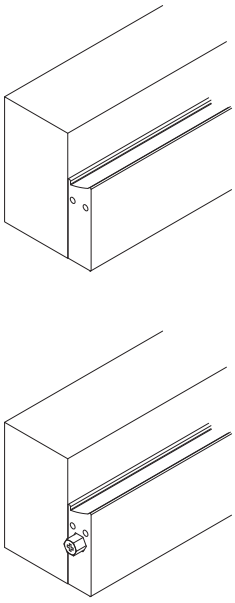

Automatic Door Bottom Kits	
K411	Optional Kit for 411 and STC411 Door Bottom, 1 3/8" Doors
K412R1C	Kit for new style 412 Door Bottom - Clear
K412R1D	Kit for new style 412 Door Bottom - Dark Bronze
K4133C	Kit for 4131, STC4131 Door Bottoms, Clear
K4133D	Kit for 4131, STC4131 Door Bottoms, Dark Bronze
K4133G	Kit for 4131 Door Bottom, Bright Dip Gold
K420	Kit for 420 Door Bottom
K435	Standard Kit for 411, 434, and STC411 Door Bottom
K436	Kit for 4301 Door Bottom (surface)
K435-PREM	Special End-Support Mounting Kit for 434 (sold separately)

Copyright © 2015-2025, ASSA ABLOY Accessories and Door Controls Group, Inc., an ASSA ABLOY Group company. All rights reserved.
Reproduction in whole or in part without the express written permission of ASSA ABLOY Accessories and Door Controls Group, Inc. is prohibited.

EXCESSIVE GAP DOOR BOTTOM SOLUTIONS

- Brings fire-rated doors with excessive bottom gaps back into spec - up to 1-1/2"
- Meets UL10C requirements for 90 minute single and pairs of doors
- Supplied net length (as ordered)
- Patent Pending
- Two rows of fasteners must be installed for double door applications (XG2212_PK773 only)

XG2212_PK773

AVAILABLE FINISHES: **A, BSP, WSP, 10BE**
REPLACEMENT INSERT: **PK773 (BL)**

- Aluminum construction
- Easily field modifiable with standard equipment
- Supplied with K450XG end plate kit
- Patent Pending

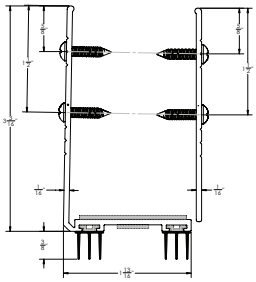

325XGSSN

AVAILABLE FINISHES: **SS, SSBSP, SSWSP, SS10BE**
REPLACEMENT INSERT: **N25 (BL)**

- Stainless steel door sweep paired with stainless steel angle
- #4 brushed stainless steel
- Supplied with K450XG end plate kit

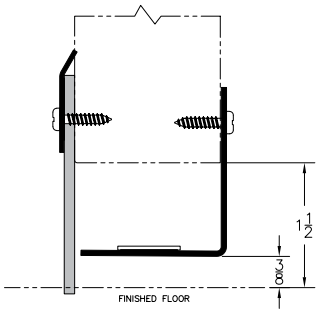

EXCESSIVE GAP DOOR TOP SOLUTIONS

- Brings fire-rated doors with excessive top gaps back into spec - up to 1/2"
- Meets UL10C requirements for 90 minute single or pairs of fire rated doors
- Supplied net length (as ordered)

EGA305XG

AVAILABLE FINISHES: **SS, SSBSP, SSWSP, SS10BE**

- Stainless steel construction, #4 brushed
- Supplied with HSS2000 intumescent
- Supplied with K450XG end plate kit

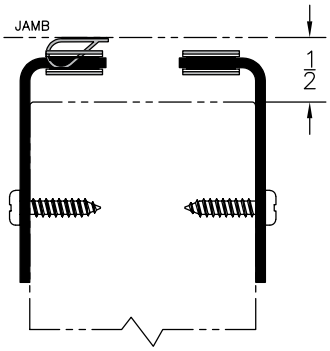

K450XG END PLATE KIT

SUPPLIED WITH EGA305XG, XG2212_PK773, AND 325XGSSN



ECO-V™ DOOR SHOES

- Dual durometer Eco-V™ door shoe
- EV80_ is furnished net 36"
- Supplied Net Length (as ordered)

EV80

AVAILABLE FINISHES: **D**
AVAILABLE LENGTHS: **36" NET**

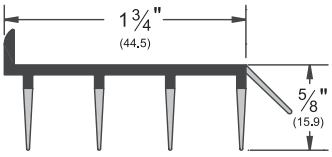

2170_V

AVAILABLE COLORS: **D**
AVAILABLE LENGTHS: **36", 48"**

Also available with unnotched insert:
2170_V36UN
2170_V48UN

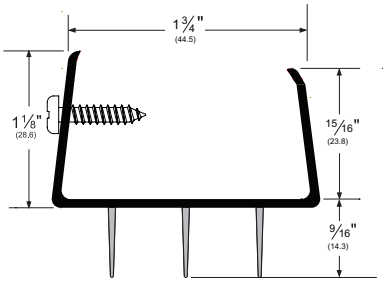

NOTE: Products shown in this section may not be drawn to scale.

AVAILABLE FINISHES FOR PRODUCTS SHOWN ON THIS PAGE
10BE (Satin Bronze Powder) **A** (Mill Finish Aluminum) **BSP** (Black Suede Powder)
SS (Stainless Steel) **WSP** (White Suede Powder)
Eco-V® DOORS SHOES: **D** (Dark Brown)

PEMKO
ASSA ABLOY
Experience a safer and more open world

800-824-3018 | www.pemko.com
Check the web site for the up-to-date catalog

Copyright © 2015-2025, ASSA ABLOY Accessories and Door Controls Group, Inc., an ASSA ABLOY Group company. All rights reserved. Reproduction in whole or in part without the express written permission of ASSA ABLOY Accessories and Door Controls Group, Inc. is prohibited.

DOOR SHOES

- Profiles on this page available with PemkoPrene™ (PK) or Eco-V™ (V); both are the same shape and size
- Slotted holes for easy adjustment
- Rain drip model is ideal for deflecting rain away from the bottom of door
- Recommended compression of gasket fins is 1/16"
- Except where specified otherwise, supplied with 1/4" undercut from length ordered. Specify "NET LENGTH" to receive length as ordered.

216_V

AVAILABLE FINISHES: **A, B, BSP, D, SN, WSP**
REPLACEMENT INSERT: **EV9 (BL, GR)**
ANSI: **R3D514**

216_PK

AVAILABLE FINISHES: **A, B, BSP, D, SN, WSP**
REPLACEMENT INSERT: **PK9 (BL, GR)**
ANSI: **R3G514**

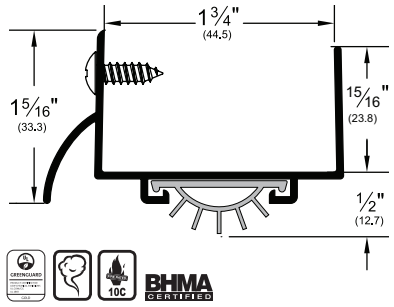

B finish flange is 5/8

215_V

AVAILABLE FINISHES:**A, BSP, D, PW, SN**
REPLACEMENT INSERT: **EV9 (BL, GR)**
ANSI: **R3D514**

215_PK

AVAILABLE FINISHES:**A, BSP, D, PW, SN**
REPLACEMENT INSERT: **PK9 (BL, GR)**
ANSI: **R3G514**

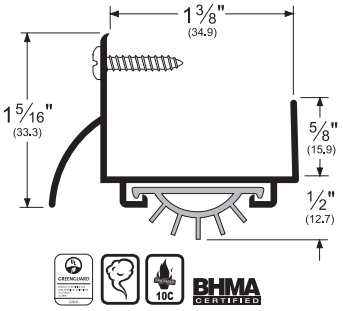

210_V

AVAILABLE FINISHES: **A, BSP, D, PW, SN**
REPLACEMENT INSERT: **EV9 (BL, GR)**
ANSI: **R3D514**

210_PK

AVAILABLE FINISHES: **A, BSP, D, PW, SN**
REPLACEMENT INSERT: **PK9 (BL, GR)**
ANSI: **R3G514**

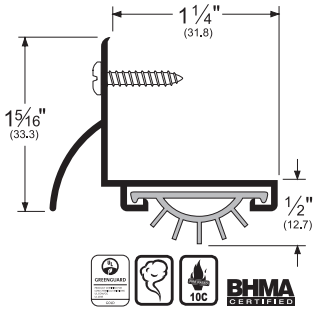

217_V

AVAILABLE FINISHES: **A, BSP, D, G, SN, WSP**
REPLACEMENT INSERT: **EV9 (BL, GR)**
ANSI: **R3D414**

217_PK

AVAILABLE FINISHES: **A, BSP, D, G, SN, WSP**
REPLACEMENT INSERT: **PK9 (BL, GR)**
ANSI: **R3G414**

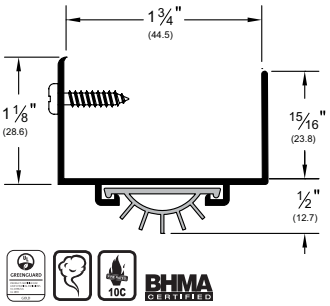

211_V

AVAILABLE FINISHES: **4E, A, BSP, D, G, WSP**
REPLACEMENT INSERT: **EV9 (BL, GR)**
ANSI: **R3D414**

211_PK

AVAILABLE FINISHES: **4E, A, BSP, D, G, WSP**
REPLACEMENT INSERT: **PK9 (BL, GR)**
ANSI: **R3G414**

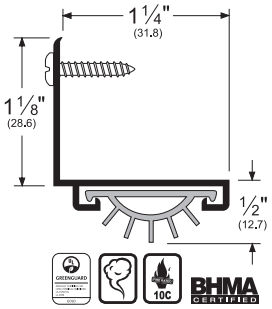

234_V

AVAILABLE FINISHES: **A, BSP, D, G**
REPLACEMENT INSERT: **EV9 (BL, GR)**
ANSI: **R3D414**

234_PK

AVAILABLE FINISHES: **A, BSP, D, G**
REPLACEMENT INSERT: **PK9 (BL, GR)**
ANSI: **R3G414**

- Supplied Net Length (as ordered)

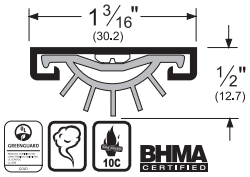

209_V

AVAILABLE FINISHES: **A, BSP, D**
REPLACEMENT INSERT: **EV15 (BL, GR)**
ANSI: **R3D414**

- Supplied Net Length (as ordered)

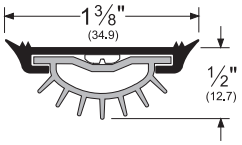

NOTE: Products shown in this section may not be drawn to scale.

AVAILABLE FINISHES FOR PRODUCTS SHOWN ON THIS PAGE
4E (Translucent Brass Powder Coat) **A** (Mill Finish Aluminum) **BSP** (Black Suede Powder Coated Aluminum)
D (Dark Bronze Anodized) **G** (Gold Anodized) **PW** (Painted White) **SN** (Satin Nickel Anodized)
WSP (White Suede Powder Coated Aluminum)

800-824-3018 | www.pemko.com

Check the web site for the up-to-date catalog

Copyright © 2015-2025, ASSA ABLOY Accessories and Door Controls Group, Inc., an ASSA ABLOY Group company. All rights reserved.
Reproduction in whole or in part without the express written permission of ASSA ABLOY Accessories and Door Controls Group, Inc. is prohibited.

PEMKO
ASSA ABLOY
Experience a safer and more open world

DOOR SHOES *(Cont.)*

- Notched-fin gaskets (where applicable) allow up to 50% free air flow
- Recommended compression of gasket fins is 1/16
- Except where noted, supplied with 1/4" undercut from length ordered. Specify "NET LENGTH" to receive length as ordered."

2173_V

AVAILABLE FINISHES: **A, BSP, D, G, WSP**
AVAILABLE LENGTHS: **36", 48"**
REPLACEMENT INSERT: **EV94 (BL)**
ANSI: **R3D414, R3D415**

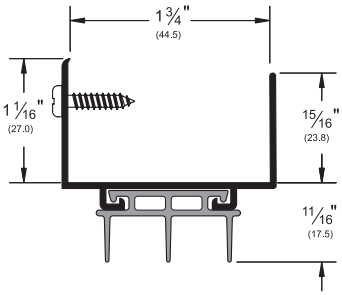

Also available with unnotched insert:
2173_V36UN
2173_V48UN

2343_V

AVAILABLE FINISHES: **A, BSP, D, G**
AVAILABLE LENGTHS: **36", 48"**
REPLACEMENT INSERT: **EV94 (BL)**
ANSI: **R3D414, R3D415**

- Supplied Net Length (as ordered)

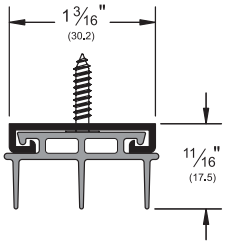

Also available with unnotched insert:
2343_V36UN
2343_V48UN

3692_PK773

AVAILABLE FINISHES: **A**
AVAILABLE LENGTHS: **36", 48"**
REPLACEMENT INSERT: **PK773 (BL, GR)**
ANSI: **R3G414, R3G415**

- Supplied Net Length (as ordered)

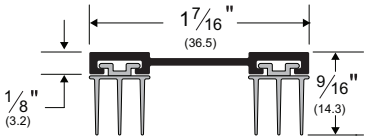

2113_V

AVAILABLE FINISHES: **4E, A, BSP, D, G, WSP**
AVAILABLE LENGTHS: **36", 48"**
REPLACEMENT INSERT: **EV94 (BL)**
ANSI: **R3D414, R3D415**

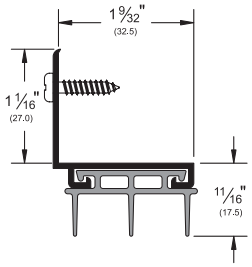

Also available with unnotched insert:
2113_V36UN
2113_V48UN

Replacement "V" gasket for Door Shoes on this page is EV94. For replacement gasket with nothed fins, add "N" to the end of the part number.

Example:
EV94BL-36.5 - Unnotched fins
EV94BL-36.5N - Notched fins (for airflow)

223_NB

AVAILABLE FINISHES: **A, BSP, WSP**
REPLACEMENT INSERT: **P516041 (BL, GR)**
ANSI: **R3A514, R3A515**

- Supplied Net Length (as ordered)

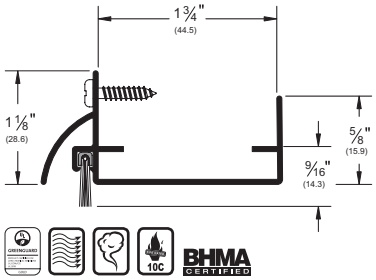

NOTE: Products shown in this section may not be drawn to scale.

AVAILABLE FINISHES FOR PRODUCTS SHOWN ON THIS PAGE
4E (Translucent Brass Powder Coat) **A** (Mill Finish Aluminum) **BSP** (Black Suede Powder Coated Aluminum)
D (Dark Bronze Anodized) **G** (Gold Anodized) **WSP** (White Suede Powder Coated Aluminum)

PEMKO
ASSA ABLOY
Experience a safer and more open world

800-824-3018 | www.pemko.com
Check the web site for the up-to-date catalog

Copyright © 2015-2025, ASSA ABLOY Accessories and Door Controls Group, Inc., an ASSA ABLOY Group company. All rights reserved. Reproduction in whole or in part without the express written permission of ASSA ABLOY Accessories and Door Controls Group, Inc. is prohibited.

DOOR SHOES *(Cont.)*

2212_PK773

AVAILABLE FINISHES: **10BE, 4E, A, BSP, WSP**
REPLACEMENT INSERT: **PK773 (BL)**
ANSI: **R3G416**

- Combination door shoe and kick plate
- Excellent Acoustic performance
- Supplied Net Length (as ordered)

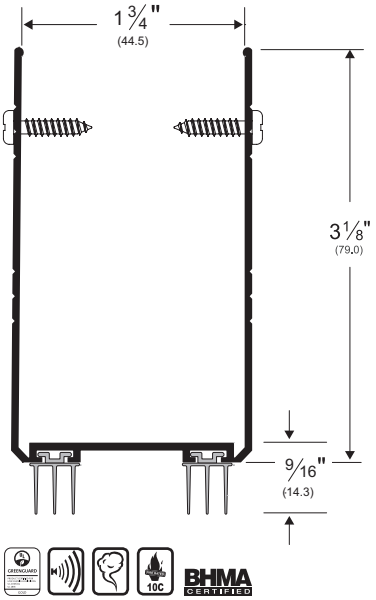

221_V

AVAILABLE FINISHES: **4E, A, BSP, D, G, WSP**
REPLACEMENT INSERT: **EV9 (BL, GR)**
ANSI: **R3D414**

221_PK

AVAILABLE FINISHES: **4E, A, BSP, D, G, WSP**
REPLACEMENT INSERT: **PK9 (BL, GR)**
ANSI: **R3G414**

- Combination door shoe and kick plate
- Supplied Net Length (as ordered)

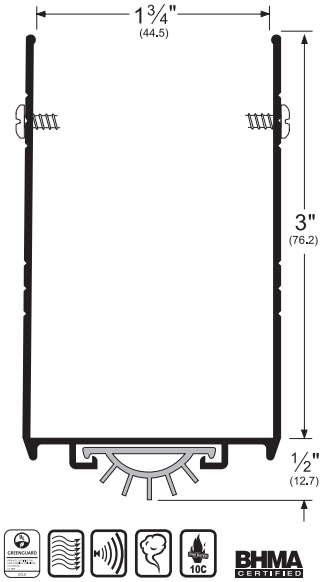

2211_V

AVAILABLE FINISHES: **A, BSP, D, G, WSP**
REPLACEMENT INSERT: **EV9 (BL, GR)**
ANSI: **R3D514**

2211_PK

AVAILABLE FINISHES: **A, BSP, D, G, WSP**
REPLACEMENT INSERT: **PK9 (BL, GR)**
ANSI: **R3G514**

- Combination door shoe and kick plate with raindrip
- Supplied Net Length (as ordered)

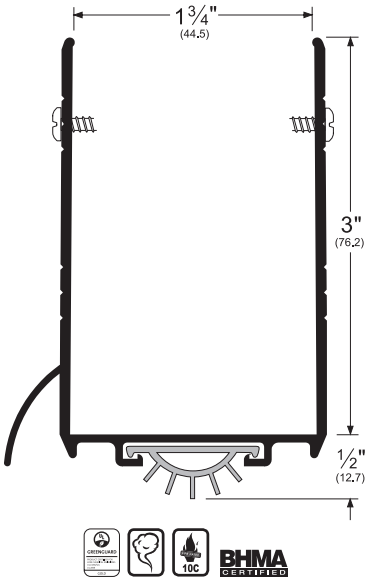

Thermally Broken Door Shoe

- Polypropylene thermal break (FG) prevents conductivity of hot or cold from exterior to interior. Supplied with PemkoPrene™ Seal
- Supplied Net Length (as ordered)

216_FG

AVAILABLE FINISHES: **A, BSP, D, SN, WSP**
REPLACEMENT INSERT: **PK216 (BL, GR)**
ANSI: **R3D514**

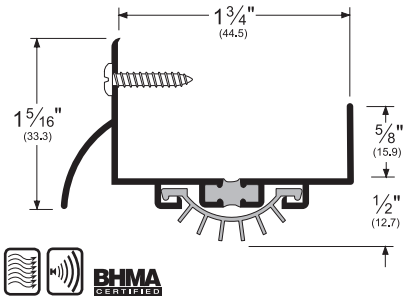

NOTE: Products shown in this section may not be drawn to scale.

AVAILABLE FINISHES FOR PRODUCTS SHOWN ON THIS PAGE
10BE (Satin Bronze Powder Coated Aluminum) **4E** (Translucent Brass Powder Coat) **A** (Mill Finish Aluminum)
BSP (Black Suede Powder Coated Aluminum) **D** (Dark Bronze Anodized) **G** (Gold Anodized) **SN** (Satin Nickel Anodized)
WSP (White Suede Powder Coated Aluminum)

Copyright © 2015-2025, ASSA ABLOY Accessories and Door Controls Group, Inc., an ASSA ABLOY Group company. All rights reserved.
Reproduction in whole or in part without the express written permission of ASSA ABLOY Accessories and Door Controls Group, Inc. is prohibited.

PEMKO
ASSA ABLOY
Experience a safer and more open world

DOOR SWEEPS FOR HOLLOW METAL DOORS

- Profiles in this section available with PemkoPrene™ (PK) or Eco-V™ (V); both are the same shape and size
- Slotted holes for easy adjustment
- Rain drip model is ideal for deflecting rain away from the bottom of the door

222_V

AVAILABLE FINISHES: **4E, A, BSP, D, WSP**
REPLACEMENT INSERT: **EV9 (BL, GR)**
ANSI: **R3D414**

222_PK

AVAILABLE FINISHES: **4E, A, BSP, D, WSP**
REPLACEMENT INSERT: **PK9 (BL, GR)**
ANSI: **R3G414**

- For hollow metal doors with inverted bottom channel
- Supplied Net Length (as ordered)

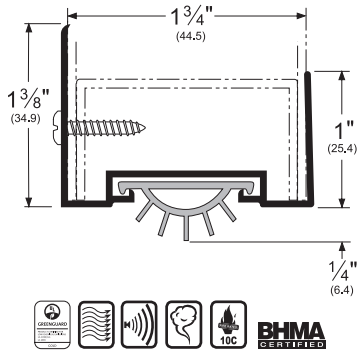

2221_V

AVAILABLE FINISHES: **A, BSP, G, WSP**
REPLACEMENT INSERT: **EV9 (BL, GR)**
ANSI: **R3D514**

2221_PK

AVAILABLE FINISHES: **A, BSP, G, WSP**
REPLACEMENT INSERT: **EV9 (BL, GR)**
ANSI: **R3G514**

- Supplied Net Length (as ordered)

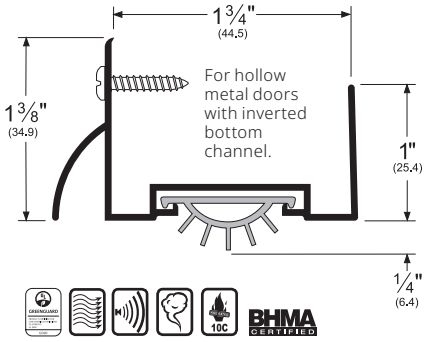

FABRICATION OPTIONS FOR DOOR SHOES

½" Full Notch

- **Fabrication includes:** removal of rain drip and front flange of door shoe to prevent interference with door stop and weatherstrip
- **Ordering:** order width of door leaf, and designate by adding **"M"** following the product number

(Example: a **216AV** with a ½" full notch fabrication, for a 36" door leaf = **216AVM36**)

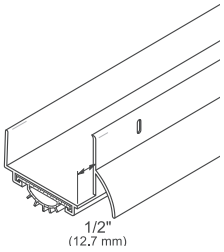

½" Half Notch

- **Fabrication includes:** removal of rain drip to prevent interference with door stop and weatherstrip
- **Ordering:** order width of door leaf and designate by adding **"N"** following the product number
- **Special:** Other half notches available are 9/16", 5/8", and 3/4" widths, please specify when ordering

(Example: a **216AV** with a ½" half notch fabrication, for a 36" door leaf = **216AVN36**)

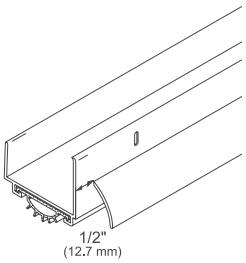

NOTE: Products shown in this section may not be drawn to scale.

AVAILABLE FINISHES FOR PRODUCTS SHOWN ON THIS PAGE
4E (Translucent Brass Powder Coat) **A** (Mill Finish Aluminum) **BDC** (Bright Dip Clear Anodized)
BSP (Black Suede Powder Coat) **D** (Dark Bronze Anodized) **G** (Gold Anodized) **WSP** (White Suede Powder Coat)

Copyright © 2015-2025, ASSA ABLOY Accessories and Door Controls Group, Inc., an ASSA ABLOY Group company. All rights reserved. Reproduction in whole or in part without the express written permission of ASSA ABLOY Accessories and Door Controls Group, Inc. is prohibited.

DOOR BOTTOM SWEEPS

315_N

AVAILABLE FINISHES:
B, BSP, C, D, WSP, 10BE, G, SN
REPLACEMENT INSERT: **E315 (BL)**
ANSI: **R3B434, R3B435**

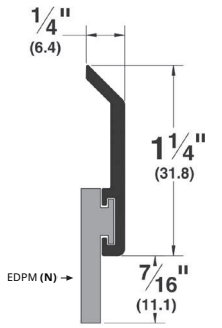

3151_N

AVAILABLE FINISHES: **BSP, C, D, G, WSP**
REPLACEMENT INSERT: **E321 (BL)**
ANSI: **R3B434**

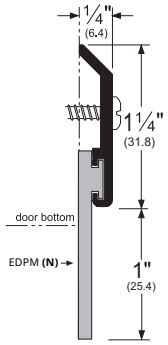

321_N

AVAILABLE FINISHES: **BSP, C, D, G, WSP**
REPLACEMENT INSERT: **E321 (BL)**
ANSI: **R3B434, R3B435**

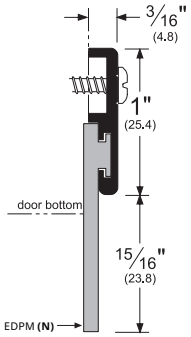

368_N

AVAILABLE FINISHES: **BSP, C, WSP**
REPLACEMENT INSERT: **E368 (BL)**
ANSI: **R3B434, R3B435**

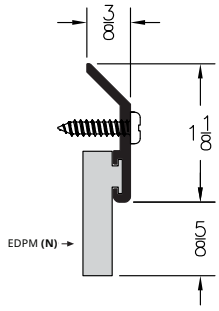

NOTE: Products shown in this section may not be drawn to scale.

AVAILABLE FINISHES FOR PRODUCTS SHOWN ON THIS PAGE
B (Mill Finish Extruded Bronze [Brass]) **BSP** (Black Suede Powder Coated Aluminum)
C (Clear Anodized) **D** (Dark Bronze Anodized) **G** (Gold Anodized) **WSP** (White Suede Powder Coated Aluminum)

Copyright © 2015-2025, ASSA ABLOY Accessories and Door Controls Group, Inc., an ASSA ABLOY Group company. All rights reserved.
Reproduction in whole or in part without the express written permission of ASSA ABLOY Accessories and Door Controls Group, Inc. is prohibited.

PEMKO
ASSA ABLOY
Experience a safer and more open world

DOOR BOTTOM SWEEPS *(Cont.)*

307_V
AVAILABLE FINISHES:
10BE, 4E, A, BSP, C, D, WSP
REPLACEMENT INSERT:
EV54 (BL, GR, W)
ANSI: **R3D434**

308_V
AVAILABLE FINISHES:
4E, A, BSP, C, D, PW
REPLACEMENT INSERT:
EV65 (BL, GR)
ANSI: **R3D434**

345_V
AVAILABLE FINISHES:
A, BSP, C, D, G, WSP
REPLACEMENT INSERT:
EV54 (BL, GR, W)
ANSI: **R3D534**

3452_V
AVAILABLE FINISHES:
A, BSP, C, D, WSP, G, SN
REPLACEMENT INSERT:
EV65 (BL, GR, W)
ANSI: **R3D534**

307_PK
AVAILABLE FINISHES:
10BE, 4E, A, BSP, C, D, WSP
REPLACEMENT INSERT:
PK54 (BL, GR)
ANSI: **R3G434**

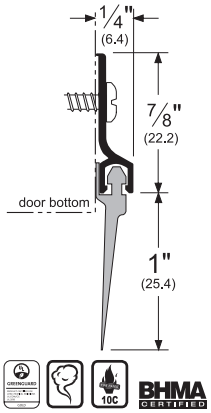

308_PK
AVAILABLE FINISHES:
4E, A, BSP, C, D, PW
REPLACEMENT INSERT:
PK65 (BL, GR)
ANSI: **R3D434**

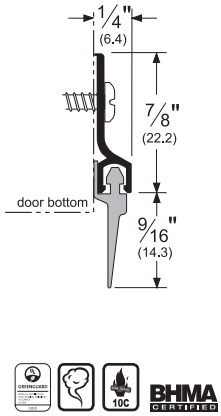

345_PK
AVAILABLE FINISHES:
A, BSP, C, D, G, WSP
REPLACEMENT INSERT:
PK54 (BL, GR)
ANSI: **R3G534**

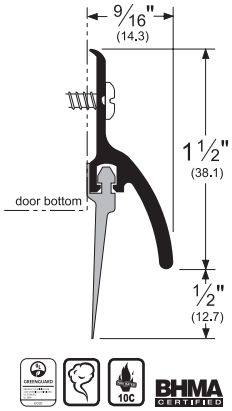

3452_PK
AVAILABLE FINISHES:
A, BSP, C, D, WSP, G, SN
REPLACEMENT INSERT:
PK65 (BL, GR)
ANSI: **R3G534**

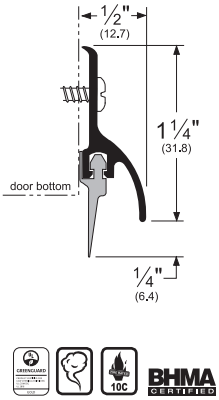

56_V
AVAILABLE FINISHES:
A, BSP, D, WSP
REPLACEMENT INSERT:
EV56 (BL, GR)

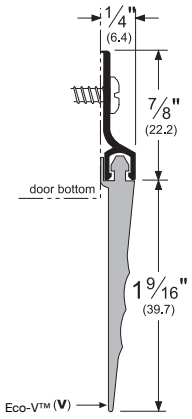

57_V
AVAILABLE FINISHES:
A, BSP, D, WSP
REPLACEMENT INSERT:
EV57 (BL)

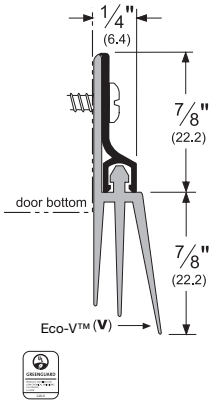

345_
AVAILABLE FINISHES:
A, B, BSP, C, D, G, WSP
ANSI: **R3Y936**

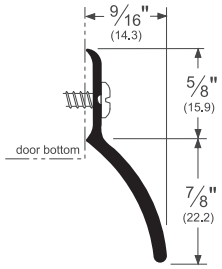

NOTE: Products shown in this section may not be drawn to scale.

AVAILABLE FINISHES FOR PRODUCTS SHOWN ON THIS PAGE
10BE (Satin Bronze Powder Coated Aluminum) **4E** (Translucent Brass Powder Coat) **A** (Mill Finish Aluminum)
B (Mill Finish Extruded Bronze [Brass]) **BSP** (Black Suede Powder Coat) **C** (Clear Anodized)
D (Dark Bronze Anodized) **G** (Gold Anodized) **PW** (Painted White) **WSP** (White Suede Powder Coat)

Copyright © 2015-2025, ASSA ABLOY Accessories and Door Controls Group, Inc., an ASSA ABLOY Group company. All rights reserved. Reproduction in whole or in part without the express written permission of ASSA ABLOY Accessories and Door Controls Group, Inc. is prohibited.

DOOR BOTTOM SWEEPS *(Cont.)*

345_NB

AVAILABLE FINISHES:
A, BSP, D, G, WSP
REPLACEMENT INSERT:
P14100 (BL, GR)
ANSI: **R3A534**

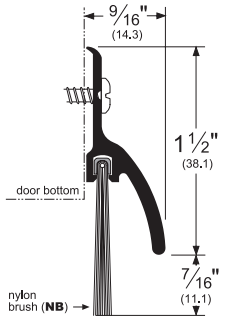

3452_NB

AVAILABLE FINISHES:
BSP, C, D, G, WSP
REPLACEMENT INSERT:
P14075 (BL, GR)
ANSI: **R3A534**

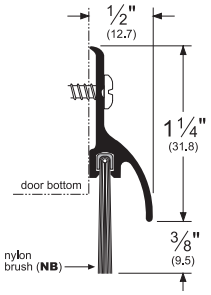

18061_NB

AVAILABLE FINISHES:
BSP, C, D, G, SN, WSP
REPLACEMENT INSERT:
P516062 (BL, GR, W)
ANSI: **R3A434**

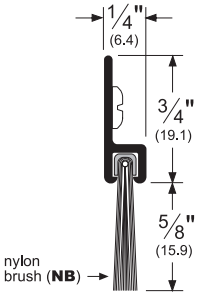

18137_NB

AVAILABLE FINISHES:
BSP, C, D, G, WSP
REPLACEMENT INSERT:
P38137 (BL, GR)
ANSI: **R3A434**

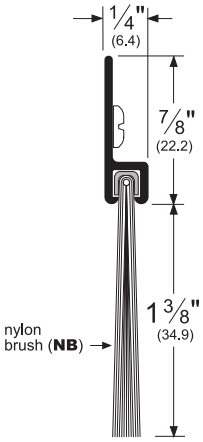

18100_NB

AVAILABLE FINISHES:
BSP, C, D, G, WSP
REPLACEMENT INSERT:
P38100 (BL, GR)
ANSI: **R3A434**

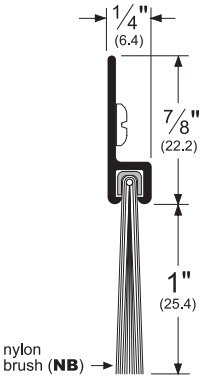

293100_NB

AVAILABLE FINISHES:
BSP, C, D, G, WSP
REPLACEMENT INSERT:
P516100 (BL, GR, W)

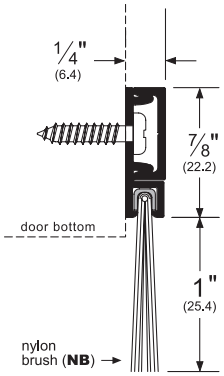

90062_NB

AVAILABLE FINISHES:
BSP, C, D, G, WSP
REPLACEMENT INSERT:
P516062 (BL, GR, W)
ANSI: **R3A414**

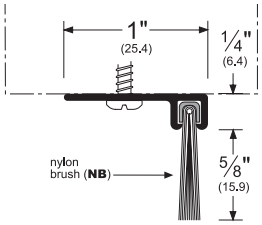

90100_NB

AVAILABLE FINISHES:
BSP, C, D, WSP
REPLACEMENT INSERT:
P516100 (BL, GR, W)
ANSI: **R3A414**

For hollow metal doors with inverted channel

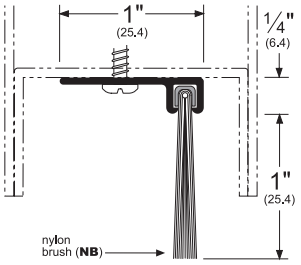

NOTE: Products shown in this section may not be drawn to scale.

AVAILABLE FINISHES FOR PRODUCTS SHOWN ON THIS PAGE
A (Mill Finish Aluminum) **BSP** (Black Suede Powder Coat) **C** (Clear Anodized)
D (Dark Bronze Anodized) **G** (Gold Anodized) **SN** (Satin Nickel Anodized)
WSP (White Suede Powder Coat)

Copyright © 2015-2025, ASSA ABLOY Accessories and Door Controls Group, Inc., an ASSA ABLOY Group company. All rights reserved.
Reproduction in whole or in part without the express written permission of ASSA ABLOY Accessories and Door Controls Group, Inc. is prohibited.

PEMKO
ASSA ABLOY
Experience a safer and more open world

DOOR BOTTOM SWEEPS *(Cont.)*

Alternate Insert For 18100

18100_NBE

AVAILABLE FINISHES: **BSP, C, D, G, WSP**
REPLACEMENT INSERT: **P38100E (BL)**
ANSI: **R3A434**

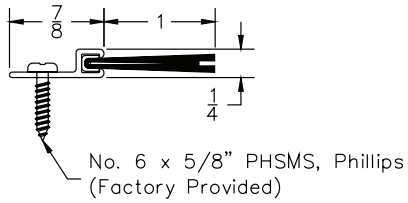

Alternate Insert For 90100

90100_NBE

AVAILABLE FINISHES: **BSP, C, D, WSP**
REPLACEMENT INSERT: **P516100E (BL)**
ANSI: **R3A414**

- For hollow metal doors with inverted channel

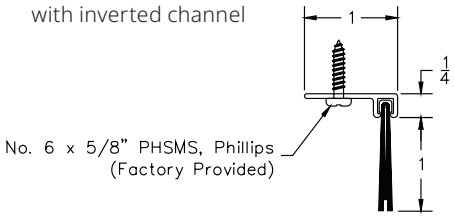

Alternate Inserts For 293100

293100_V

AVAILABLE FINISHES: **BSP, C, D, G, WSP**
REPLACEMENT INSERT: **EV54 (BL, GR, W)**

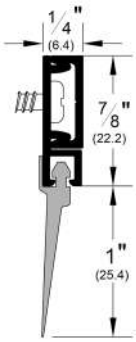

293100_NBE

AVAILABLE FINISHES: **BSP, C, D, G, WSP**
REPLACEMENT INSERT: **P516100E (BL)**

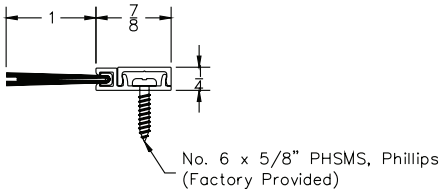

NOTE: Products shown in this section may not be drawn to scale.

AVAILABLE FINISHES FOR PRODUCTS SHOWN ON THIS PAGE
BSP (Black Suede Powder Coat), **C** (Clear Anodized), **D** (Dark Bronze Anodized), **G** (Gold Anodized), **WSP** (White Suede Powder Coat),

Copyright © 2015-2025, ASSA ABLOY Accessories and Door Controls Group, Inc., an ASSA ABLOY Group company. All rights reserved. Reproduction in whole or in part without the express written permission of ASSA ABLOY Accessories and Door Controls Group, Inc. is prohibited.

STAINLESS STEEL DOOR BOTTOM SWEEPS

315SSN

AVAILABLE FINISH: **SS (#4 Finish)**
REPLACEMENT INSERT: **N8 (BL)**
ANSI: **R5B434, R5B435**

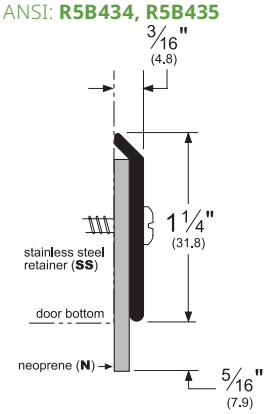

315SSR

AVAILABLE FINISH: **SS (#4 Finish)**
REPLACEMENT INSERT: **ER2 (BL)**
ANSI: **R5G164, R5G165**

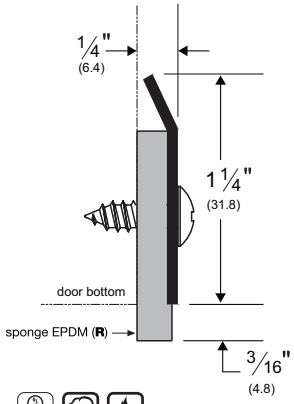

321SSN

AVAILABLE FINISH: **SS**
REPLACEMENT INSERT: **N8 (BL)**
ANSI: **R5B165**

- 430 Bright Annealed SS

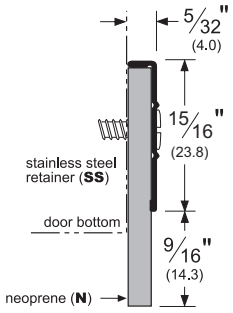

3151SSN

AVAILABLE FINISH: **SS (#4 Finish)**
REPLACEMENT INSERT: **N9 (BL)**
ANSI: **R5B434, R5B435**

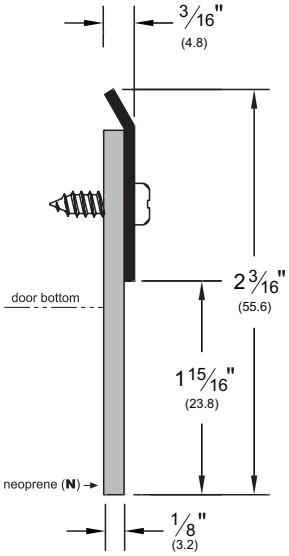

SPECIALTY DOOR SWEEP

- Talc-filled polypropylene body with flexible PemkoPrene® fin

SFSC200

AVAILABLE FINISH: **BL, GR**

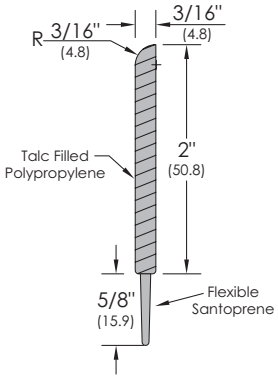

NOTE: Products shown in this section may not be drawn to scale.

AVAILABLE FINISHES FOR PRODUCTS SHOWN ON THIS PAGE
SS (See Individual Part)
SFSC Finishes: **BL** (Black), **GR** (Gray)

Copyright © 2015-2025, ASSA ABLOY Accessories and Door Controls Group, Inc., an ASSA ABLOY Group company. All rights reserved.
Reproduction in whole or in part without the express written permission of ASSA ABLOY Accessories and Door Controls Group, Inc. is prohibited.

PEMKO
ASSA ABLOY
Experience a safer and more open world

SPECIALTY DOOR BOTTOMS

- May be used in many different applications. Some of these shapes may be used as meeting stile gasketing; see page 174 for examples
- Supplied Net Length (as ordered)

313_N

AVAILABLE FINISHES: **A, D, G**
REPLACEMENT INSERT: **E1 (BL, GR)**
ANSI: **R3G416**

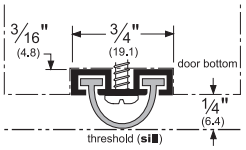

EPDM (**N**)

317_N

AVAILABLE FINISHES: **4E, A, BSP, D**
REPLACEMENT INSERT: **E1 (BL, GR)**
ANSI: **R3G416**

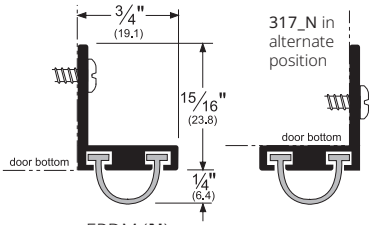

EPDM (**N**)

314_N

AVAILABLE FINISHES: **C, D, G**
REPLACEMENT INSERT: **E3 (BL)**
ANSI: **R3G416**

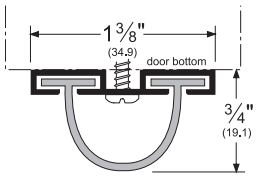

EPDM (**N**)

DOOR TOP WEATHERSTRIP

_344

AVAILABLE FINISHES: **PA**
AVAILABLE LENGTHS: **36", 48"**

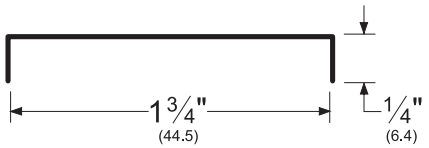

346_

AVAILABLE FINISHES: **10BE, BSP, C, D, WSP**

- Overhead rain drip with slotted holes
- Should be ordered a minimum of 4" longer than the door width

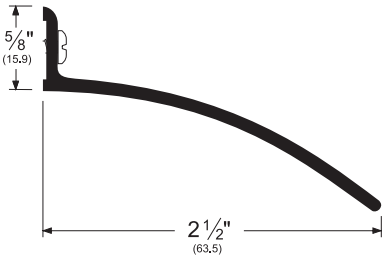

347_ 68_R

AVAILABLE FINISHES: **A, D, G**

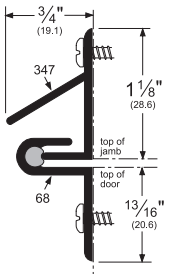

NOTE: Products shown in this section may not be drawn to scale.

AVAILABLE FINISHES FOR PRODUCTS SHOWN ON THIS PAGE
10BE (Satin Bronze Powder Coated Aluminum) **4E** (Translucent Brass Powder Coat) **A** (Mill Finish Aluminum)
BSP (Black Suede Powder Coated Aluminum) **C** (Clear Anodized) **D** (Dark Bronze Anodized) **G** (Gold Anodized)
PA (Painted Aluminum) **WSP** (White Suede Powder Coated Aluminum)
Non-Metal Finish: **BL** (Black)

Copyright © 2015-2025, ASSA ABLOY Accessories and Door Controls Group, Inc., an ASSA ABLOY Group company. All rights reserved. Reproduction in whole or in part without the express written permission of ASSA ABLOY Accessories and Door Controls Group, Inc. is prohibited.

PEMKO ASTRAGALS & MEETING STILES





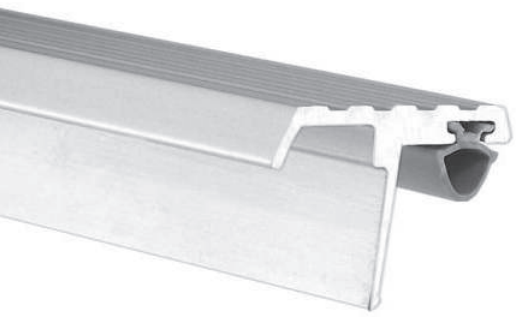

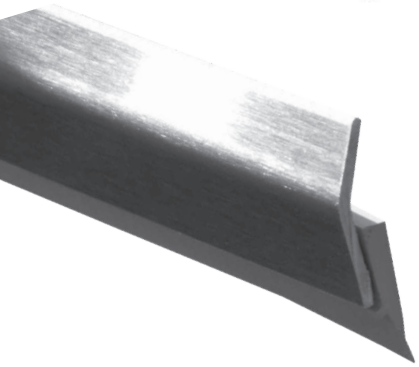

CONTENTS:

Astragal and Meeting Stile Gasketing - Split Astragals 154
Split Astragals with Snap Covers – Concealed Fasteners 156
Meeting Stile Gasketing 156
Meeting Stile Gasketing/Excessive Gap Meeting Stile 157
Adhesive Astragal/Meeting Stile Seals 158
Adjustable Astragals 158
"T" and Overlapping Astragals 159
Security Astragal 160
Adhesive-Backed Mullion Gasketing 160
Adhesive-Backed Astragal Seal 160
Offset Security Bar 160
Locking Astragals 161

INDEX:

PRODUCT	PAGE
297	154
300	157
303	154
305	154
305SS	154
310	155
311CIN	155
313	156
314	156
316	155
351	158
353	160
354	158
355	159
356	159
357	159
359	159
369	157
375	159
3493	160
3494	160
3572	160
5110	160
18041	155
18061	155
29310	156
29324	156
29326	156
PemGuard	160
S771	158
S771x6	158
S772	158
S1125	160
XG90SSME-KIT	157

Copyright © 2015-2025, ASSA ABLOY Accessories and Door Controls Group, Inc., an ASSA ABLOY Group company. All rights reserved.
Reproduction in whole or in part without the express written permission of ASSA ABLOY Accessories and Door Controls Group, Inc. is prohibited.

PEMKO
ASSA ABLOY
Experience a safer and more open world

ASTRAGAL AND MEETING STILE GASKETING – SPLIT ASTRAGALS

- Astragals and meeting stiles with a fire label may be mounted on pairs of doors wherein the gap meets the requirements of **NFPA 80, 6.3.1.7.1 "The clearance between... the meeting edges of doors swinging in pairs on the pull side shall be 1/8" ± 1/16" (3.18mm ± 1.59mm) for steel doors and shall not exceed 1/8" (3.18mm) for wood doors"**
- Punched with slotted holes for adjustment
- Order split astragals at two (2) pieces by door height per set of double doors. When ordering add "/2" to the end of the part number to specify 2 pieces (i.e. order quantity 1 each 303AS84/2 to get two lengths at 84 inches)
- Clear anodized brush products are supplied with gray brush. Painted white brush products are supplied with white brush when available, otherwise black brush is supplied. All other finishes supplied with black brush. Black brush is available for clear anodized and painted white brush products upon request.

297_S

AVAILABLE FINISHES:
10BE, 4E, A, BSP, D, PW, SN, WSP
REPLACEMENT INSERT:
S3 (BL, W)
ANSI: **R3E734, R3E735**

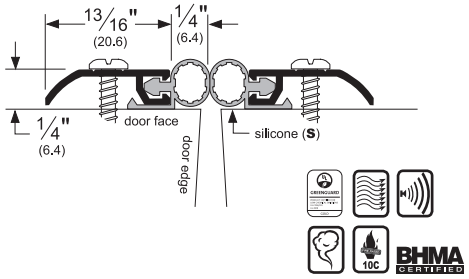

303_S

AVAILABLE FINISHES:
10BE, 4E, A, BSP, C, D, G, SN, WSP
REPLACEMENT INSERT:
S3 (BL, W)
ANSI: **R3E734, R3E735**

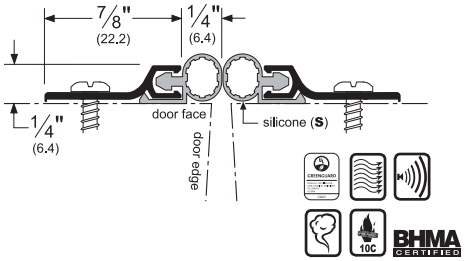

305_N

AVAILABLE FINISHES:
10BE, B, BSP, C, D, WSP
REPLACEMENT INSERT:
E2 (BL)
ANSI: **R3G734, R3G735**

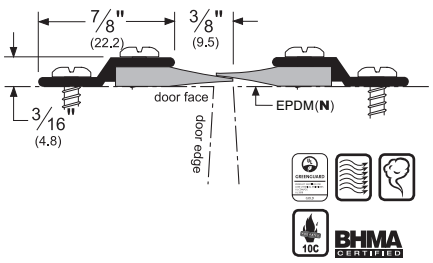

305SSE

AVAILABLE FINISHES:
SS (#4 Finish)
REPLACEMENT INSERT:
E2 (BL)
ANSI: **R5G734, R5G735**

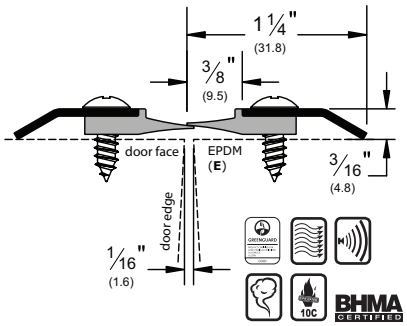

Alternate Inserts For 297

297_PK

AVAILABLE FINISHES:
10BE, 4E, A, BSP, D, PW, SN, WSP
REPLACEMENT INSERT:
PK47 (BL, GR)
ANSI: **R3G734, R3G735**

PemkoPrene™ **(PK)**

297_V

AVAILABLE FINISHES:
10BE, 4E, A, BSP, D, PW, SN, WSP
REPLACEMENT INSERT:
EV47 (BL, GR, W)

Eco-V™ **(V)**

Alternate Inserts For 303

303_PK

AVAILABLE FINISHES:
10BE, 4E, A, BSP, C, D, G, SN, WSP
REPLACEMENT INSERT:
PK47 (BL, GR)
ANSI: **R3G734**

PemkoPrene™ **(PK)**

303_V

AVAILABLE FINISHES:
10BE, 4E, A, BSP, C, D, G, SN, WSP
REPLACEMENT INSERT:
EV47 (BL, GR, W)

Eco-V™ **(V)**

AVAILABLE FINISHES FOR PRODUCTS SHOWN ON THIS PAGE
10BE (Satin Bronze Powder Coated Aluminum) **4E** (Translucent Brass Powder Coat) **A** (Mill Finish Aluminum)
BSP (Black Suede Powder Coated Aluminum) **C** (Clear Anodized) **D** (Dark Bronze Anodized) **G** (Gold Anodized)
PW (Painted White) **SN** (Satin Nickel Anodized) **WSP** (White Suede Powder Coated Aluminum)

PEMKO
ASSA ABLOY
Experience a safer and more open world

800-824-3018 | www.pemko.com
Check the web site for the up-to-date catalog

Copyright © 2015-2025, ASSA ABLOY Accessories and Door Controls Group, Inc., an ASSA ABLOY Group company. All rights reserved. Reproduction in whole or in part without the express written permission of ASSA ABLOY Accessories and Door Controls Group, Inc. is prohibited.

ASTRAGAL AND MEETING STILE GASKETING – SPLIT ASTRAGALS *(Cont.)*

316_S

AVAILABLE FINISHES:
10BE, 4E, A, BSP, D, G, WSP
REPLACEMENT INSERT:
S3 (BL, W)
ANSI: **R3E734, R3E735**

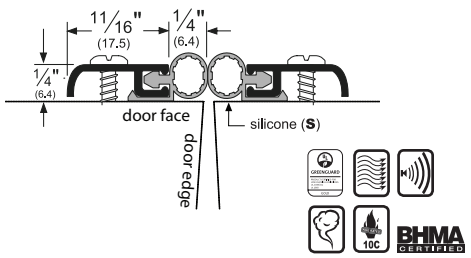

18041_NB

AVAILABLE FINISHES:
10BE, C, BSP, D, G, SN, WSP
REPLACEMENT INSERT:
P516041 (BL, GR)
ANSI: **R3A734**
NOTE: Brush should mesh from 1/32" to 1/16".

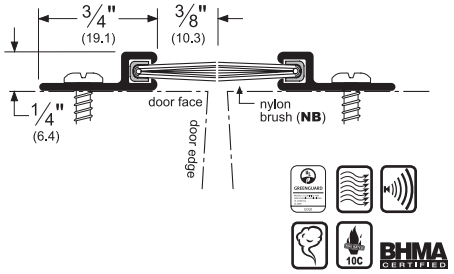

18061_NB

AVAILABLE FINISHES:
10BE, C, BSP, D, G, SN, WSP
REPLACEMENT INSERT:
P516062 (BL, GR, W)
ANSI: **R3A734**
NOTE: Brush should mesh from 1/32" to 1/16".

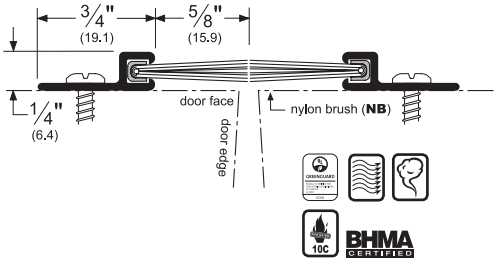

310*

311CIN

AVAILABLE FINISHES:
C

- Material required for one pair of doors:
  4 ea. 310 bars and
  2 ea. 311CIN cloth inserted rubber pieces
  - Specify 311CIN3.75 for 1 3/4"thick doors

* Sold individually

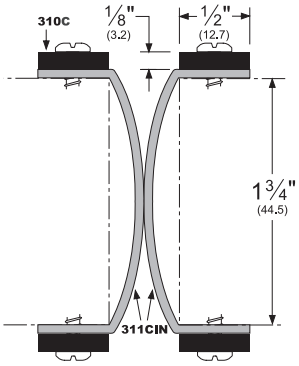

Alternate Inserts For 316

316_PK

AVAILABLE FINISHES:
10BE, 4E, A, BSP, D, G, WSP
REPLACEMENT INSERT:
PK47 (BL, GR)
ANSI: **R3G734, R3G735**



PemkoPrene™ **(PK)**

316_V

AVAILABLE FINISHES:
10BE, 4E, A, BSP, D, G, WSP
REPLACEMENT INSERT:
EV47 (BL, GR, W)



Eco-V™ **(V)**

Alternate Inserts For 18041

18041_SB

AVAILABLE FINISHES:
10BE, C, BSP, D, G, SN, WSP
REPLACEMENT INSERT:
P3 (BL, GR)



soft brush (**SB**)

AVAILABLE FINISHES FOR PRODUCTS SHOWN ON THIS PAGE
10BE (Satin Bronze Powder Coated Aluminum) **4E** (Translucent Brass Powder Coat) **A** (Mill Finish Aluminum)
BSP (Black Suede Powder Coated Aluminum) **C** (Clear Anodized) **D** (Dark Bronze Anodized)
G (Gold Anodized) **SN** (Satin Nickel Anodized) **WSP** (White Suede Powder Coated Aluminum)

Copyright © 2015-2025, ASSA ABLOY Accessories and Door Controls Group, Inc., an ASSA ABLOY Group company. All rights reserved.
Reproduction in whole or in part without the express written permission of ASSA ABLOY Accessories and Door Controls Group, Inc. is prohibited.

PEMKO
ASSA ABLOY
Experience a safer and more open world

SPLIT ASTRAGALS WITH SNAP COVERS – CONCEALED FASTENERS

- Snap cover helps prevent vandalism and adds an attractive finished look by concealing the fasteners
- Replacement snap cover part number is _29316. Please specify finish and length when ordering.

29310_PK

AVAILABLE FINISHES:
10BE, BSP, C, D, G, WSP
REPLACEMENT INSERT:
PK4 (BL, GR)
ANSI: **R3E734**

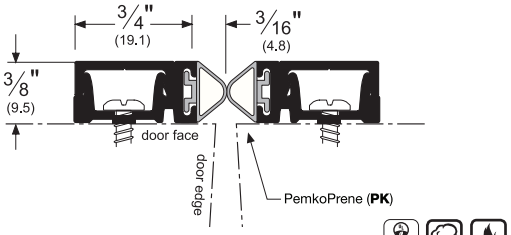

29324_NB

AVAILABLE FINISHES:
10BE, BSP, C, D, G, WSP
REPLACEMENT INSERT:
P516041 (BL, GR)
ANSI: **R3A434**

NOTE: Brush should mesh from 1/32" to 1/16".

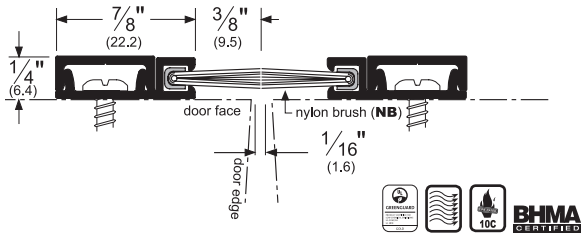

29326_NB

AVAILABLE FINISHES:
10BE, BSP, C, D, G, WSP
REPLACEMENT INSERT:
P516062 (BL, GR, W)
ANSI: **R3A164, R3A165**

NOTE: Brush should mesh from 1/32" to 1/16".

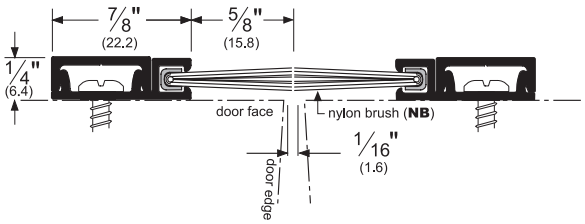

Alternate Inserts For 29310

29310_P

AVAILABLE FINISHES:
10BE, BSP, C, D, G, WSP
REPLACEMENT INSERT:
P2 (BL, GR)


pile (**P**)

29310_V

AVAILABLE FINISHES:
10BE, BSP, C, D, G, WSP
REPLACEMENT INSERT:
EV41 (BL, GR, W)


Eco-V™ (**V**)

Alternate Inserts For 29324

29324_SB

AVAILABLE FINISHES:
10BE, BSP, C, D, G, WSP
REPLACEMENT INSERT:
P3 (BL, GR)


soft brush (**SB**)

MEETING STILE GASKETING

- These products do not work well on beveled-edge pairs of doors

313_N

AVAILABLE FINISHES:
A, D, G
REPLACEMENT INSERT:
E1 (BL, GR)
NOTE: Recommended radius is 1-7/8"

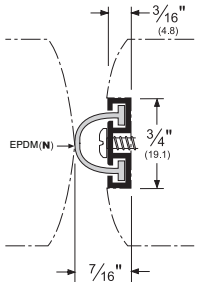

314_N

AVAILABLE FINISHES:
C, D, G
REPLACEMENT INSERT:
E3 (BL)

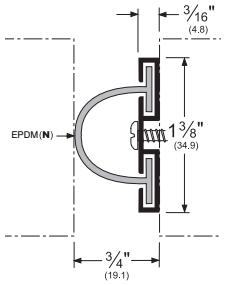

AVAILABLE FINISHES FOR PRODUCTS SHOWN ON THIS PAGE
10BE (Satin Bronze Powder Coated Aluminum) **A** (Mill Finish Aluminum) **BSP** (Black Suede Powder Coated Aluminum)
C (Clear Anodized) **D** (Dark Bronze Anodized) **G** (Gold Anodized) **WSP** (White Suede Powder Coated Aluminum)

PEMKO
ASSA ABLOY
Experience a safer and more open world

Copyright © 2015-2025, ASSA ABLOY Accessories and Door Controls Group, Inc., an ASSA ABLOY Group company. All rights reserved. Reproduction in whole or in part without the express written permission of ASSA ABLOY Accessories and Door Controls Group, Inc. is prohibited.

MEETING STILE GASKETING *(Cont.)*

- Astragals/Meeting Stiles with a fire label may be mounted on pairs of doors wherein the gap meets the requirements of NFPA 80, 2-5.4
- These products do not work well on beveled-edge pairs of doors

369_P

AVAILABLE FINISHES: **A, D, G**
REPLACEMENT INSERT:
P2 (BL, GR)

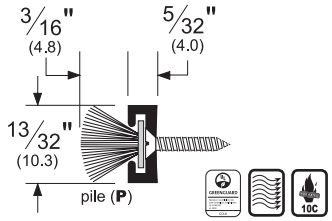

369_PK

AVAILABLE FINISHES: **A, D, G**
REPLACEMENT INSERT:
PK4 (BL, GR)

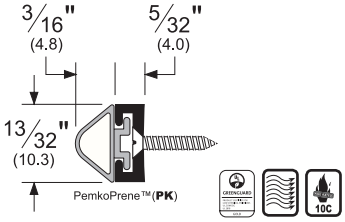

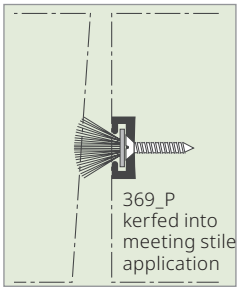

369_P4

AVAILABLE FINISHES: **A, D, G**
REPLACEMENT INSERT:
P4 (BL)

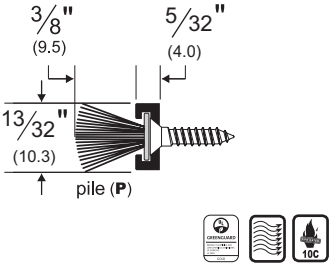

369_PK773

AVAILABLE FINISHES: **A, D, G**
REPLACEMENT INSERT:
PK773 (BL)

- Gasket only available in 36" or 49" lengths and will be spliced a continuous metal retainer

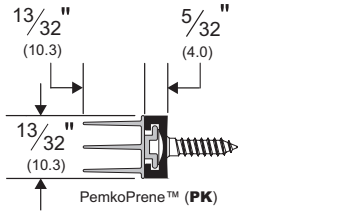

369_V

AVAILABLE FINISHES: **A, D, G**
REPLACEMENT INSERT:
EV41 (BL, GR, W)

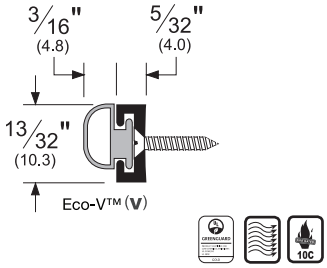

300_P

AVAILABLE FINISHES:
B, C, D, G
REPLACEMENT INSERT:
P2 (BL, GR)

- For a 3/8" gap (or smaller) between doors
- Spring-loaded from back side

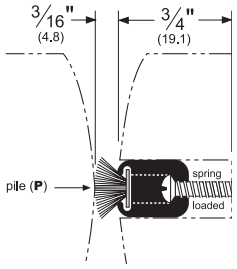

EXCESSIVE GAP MEETING EDGE

XG90SSME-KIT

AVAILABLE FINISHES: **SS, 10BE, BSP, WSP**

- Certified for paired doors on both Hollow Metal and Wood Fire-Rated Doors, up to 90 minutes
- Meets UL10C requirements for excessive gaps up to 1/2"
- Furnished with metal edge guard and high performance intumescent: HSS2000BL, HSS90BL

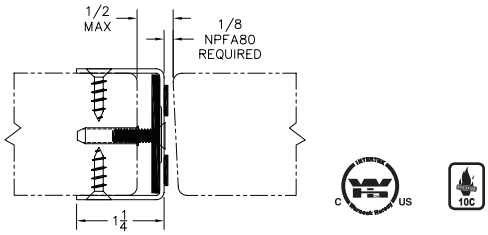

AVAILABLE FINISHES FOR PRODUCTS SHOWN ON THIS PAGE
A (Mill Finish Aluminum) **B** (Mill Finish Extruded Bronze [Brass]) **C** (Clear Anodized) **D** (Dark Bronze Anodized) **G** (Gold Anodized)
MEETING STILE: **10BE** (Satin Bronze Powder Coated Aluminum) **BSP** (Black Suede Powder Coated Aluminum)
SS (Stainless Steel) **WSP** (White Suede Powder Coated Aluminum)

Copyright © 2015-2025, ASSA ABLOY Accessories and Door Controls Group, Inc., an ASSA ABLOY Group company. All rights reserved.
Reproduction in whole or in part without the express written permission of ASSA ABLOY Accessories and Door Controls Group, Inc. is prohibited.

PEMKO
ASSA ABLOY
Experience a safer and more open world

ADHESIVE ASTRAGAL/MEETING STILE SEALS

- The **S771** and **S772** astragal/meeting stile seals can be installed on virtually any pair of doors where sound attenuation is required. These products seal the opening to prevent heat loss, retard the passage of smoke, and act as a weatherization product
- Excellent resistance to compression set, particularly at elevated temperatures and for extended periods of time
- Stays flexible between -58°F and 450°F with very high resistance to flex fatigue
- Maintains a low closing force
- Easy installation requires no mechanical fasteners; can be cut to size in the field

S771

AVAILABLE FINISHES: **BL, C, D, W**
AVAILABLE LENGTHS: **7', 8', 9', 10'**
ANSI: **R0E754, R0E755**

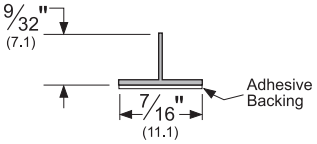

S772

AVAILABLE FINISHES: **BL, C, D, W**
AVAILABLE LENGTHS: **7', 8', 9', 10'**
ANSI: **R0E754, R0E755**

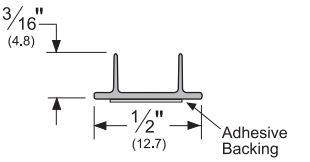

S771x6

AVAILABLE FINISHES: **BL**
AVAILABLE LENGTHS: **7', 8', 9', 10'**
ANSI: **R0E154, R0E155, R0E754, R0E755**

- Designed for hollow metal and wood meeting stile applications
- Seal begins compressing at 5/16"

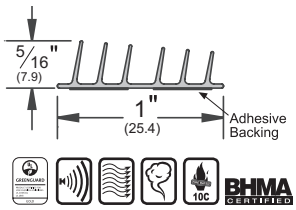

Notes For All Adhesive Gasketing:
Storage and shelf life: All adhesive gaskets have a limited shelf life. This product must be installed within 6 months of purchase and must be stored between 50°F and 100°F.
For further notes/details, please see Adhesive Gasketing section.

ADJUSTABLE ASTRAGALS

- Available in 84", 96" and 120" lengths
- When used as split astragals on double doors, two lengths must be ordered: one for each door
- If you require split astragals in a metal to gasket configuration, you must order using part number 351_/351_PK where "PK" can be any gasket designation shown in this section and "_" is your desired finish

351_PK

AVAILABLE FINISHES:
10BE, B, BSP, C, D, G, WSP
REPLACEMENT INSERT:
PK4 (BL, GR)

- Suface applied
- For use with square-edge or bevel-edge doors
- 351_PK (et al) is one single piece; order 351_/351_PK to receive both pieces as in drawing

351_ / 351_PK shown below

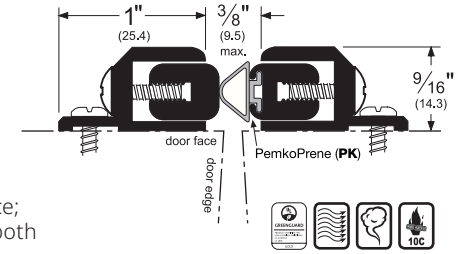

354_PK

AVAILABLE FINISHES:
10BE, B, BSP, C, D, G, WSP
REPLACEMENT INSERT:
PK4 (BL, GR)

- Fully mortised
- Designed for use with bullnose doors
- 354_PK (et al) is one single piece; order 354_/354_PK to receive both pieces as in drawing

354_ / 354_PK shown below

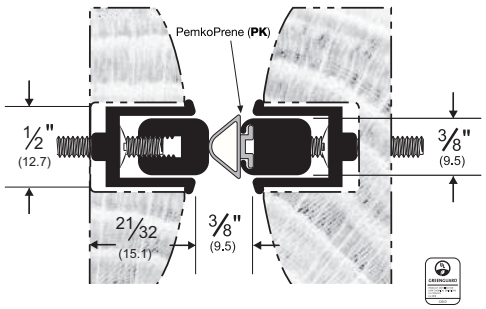

Alternate Inserts For 351

351_V

AVAILABLE FINISHES:
10BE, B, BSP, C, D, G, WSP
REPLACEMENT INSERT:
EV41 (BL, GR, W)



351_P

AVAILABLE FINISHES:
10BE, B, BSP, C, D, G, WSP
REPLACEMENT INSERT:
P2 (BL, GR)



Alternate Inserts For 354

354_V

AVAILABLE FINISHES:
10BE, B, BSP, C, D, G, WSP
REPLACEMENT INSERT:
EV41 (BL, GR, W)



354_P

AVAILABLE FINISHES:
10BE, B, BSP, C, D, G, WSP
REPLACEMENT INSERT:
P2 (BL, GR)



AVAILABLE FINISHES FOR PRODUCTS SHOWN ON THIS PAGE
10BE (Satin Bronze Powder Coated Aluminum) **B** (Mill Finish Extruded Bronze [Brass]) **BSP** (Black Suede Powder Coated Aluminum) **C** (Clear Anodized) **D** (Dark Bronze Anodized) **G** (Gold Anodized) **WSP** (White Suede Powder Coated Aluminum)
Gasket colors: **BL** (Black) **C** (Clear) **D** (Dark) **GR** (Gray) **W** (White)

PEMKO
ASSA ABLOY
Experience a safer and more open world

800-824-3018 | www.pemko.com
Check the web site for the up-to-date catalog

Copyright © 2015-2025, ASSA ABLOY Accessories and Door Controls Group, Inc., an ASSA ABLOY Group company. All rights reserved. Reproduction in whole or in part without the express written permission of ASSA ABLOY Accessories and Door Controls Group, Inc. is prohibited.

"T" AND OVERLAPPING ASTRAGALS

359_

AVAILABLE FINISHES:
10BE, A, BSP, D, WSP

- Supplied with weatherstrip nails for installation

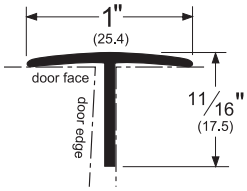

356_V

AVAILABLE FINISHES:
10BE, A, BSP, D, PW, WSP
REPLACEMENT INSERT:
EV17 (GR, W)

- Countersink drilling with countersunk flathead screws also available upon request at no extra charge

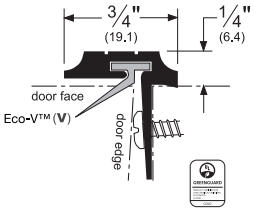

355_S

AVAILABLE FINISHES:
10BE, B, BSP, C, D, PW, WSP
REPLACEMENT INSERT:
S4 (BL, GR)

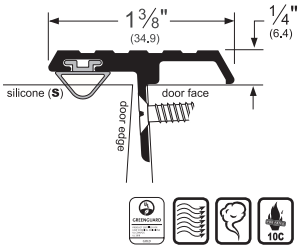

Alternate Inserts For 355

355_V

AVAILABLE FINISHES:
10BE, B, BSP, C, D, PW, WSP
REPLACEMENT INSERT:
EV7 (BL, GR)



355_P

AVAILABLE FINISHES:
10BE, B, BSP, C, D, PW, WSP
REPLACEMENT INSERT:
P2 (BL, GR)



355_PK

AVAILABLE FINISHES:
10BE, B, BSP, C, D, PW, WSP
REPLACEMENT INSERT:
PK7 (BL, GR)



357_
357_ND

AVAILABLE FINISHES:
10BE, BSP, C, D, SP, SPBSP, SPWSP
SS (#4 Finish & #4 Edge)

11 GAUGE

- "ND" denotes "no drill" (unless specified "ND", astragals are drilled)
- Standard fastener is #10 x 1" Truss Head SMS
- Lead-line option available

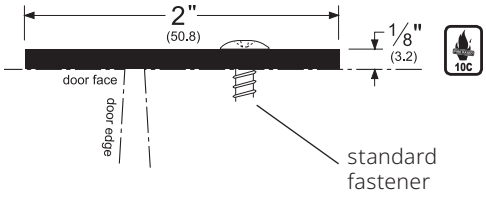

357_ with S88

AVAILABLE FINISHES:
SP, SS (#4 Finish & #4 Edge)

11 GAUGE

- Standard fastener is #10 x 1" Truss Head SMS
- 1/4" - 20 machine screws and thru-bolts must be ordered separately at additional cost
- S88 seal must be ordered separately at an additional cost, if required

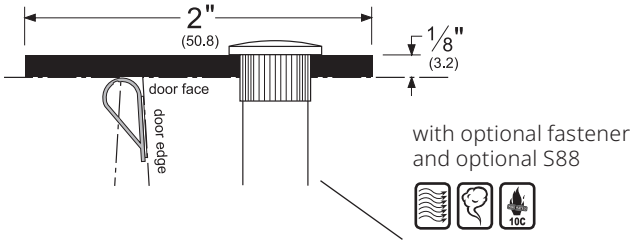

375_R

AVAILABLE FINISHES: **10BE, BSP, C, D, WSP**
REPLACEMENT INSERT: **ER6 (BL)**
ANSI: **R3C634, R3C635**

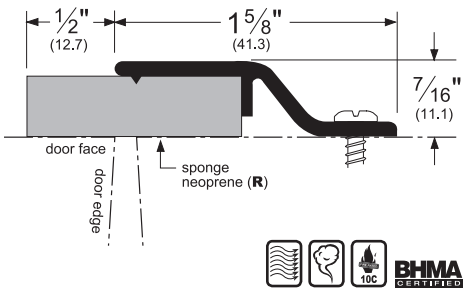

AVAILABLE FINISHES FOR PRODUCTS SHOWN ON THIS PAGE
10BE (Satin Bronze Powder Coated Aluminum) **A** (Mill Finish Aluminum) **B** (Mill Finish Extruded Bronze [Brass])
C (Clear Anodized) **BSP** (Black Suede Powder Coated Aluminum) **D** (Dark Bronze Anodized) **PW** (Painted White)
SP (Galvannealed Steel) **SPBSP** (Black Suede Powder Coated Steel) **SPWSP** (White Suede Powder Coated Steel)
SS (See Individual Part) **WSP** (White Suede Powder Coated Aluminum)

Copyright © 2015-2025, ASSA ABLOY Accessories and Door Controls Group, Inc., an ASSA ABLOY Group company. All rights reserved.
Reproduction in whole or in part without the express written permission of ASSA ABLOY Accessories and Door Controls Group, Inc. is prohibited.

PEMKO
ASSA ABLOY
Experience a safer and more open world

SECURITY ASTRAGAL

PemGuard™ 353_

AVAILABLE FINISHES: **BSP, C**
AVAILABLE LENGTHS: **83", 95"**

- Full-height interlocking feature secures door-jamb gap, preventing prying and forced entry
- Designed for metal, wood, and store front outswing doors—both single and double with one active leaf
- Door Thickness: 1-5/8" to 2"
- Material: 6063-T6 Aluminum
- No strike plate prep required
- Horizontal adjustability
- Tek screws for easy installation
- Tamper proof thru bolts
- Custom finishes available upon request

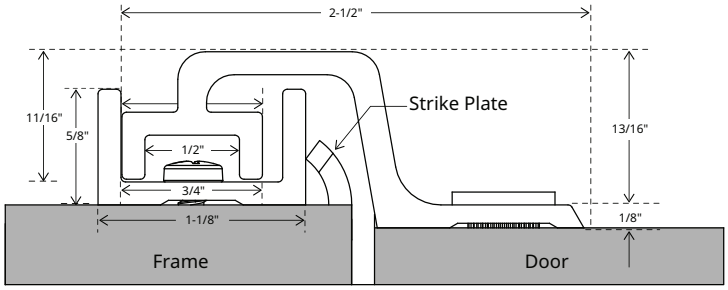

HORIZONTAL ADJUSTABILITY
Frame Side

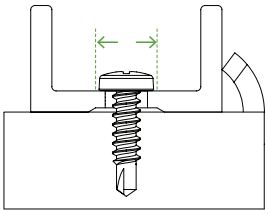

WEATHERIZATION
- Product #P491
- Color: Gray
- 1/4" T x 3/8" W x 10' L

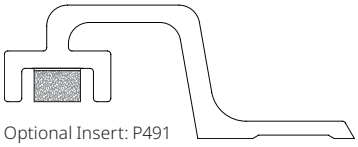

ADHESIVE-BACKED MULLION GASKETING

5110_

AVAILABLE FINISH: **BL**
AVAILABLE LENGTHS: **120"**
ANSI: **R0C004**

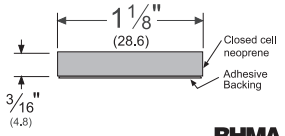

BHMA CERTIFIED

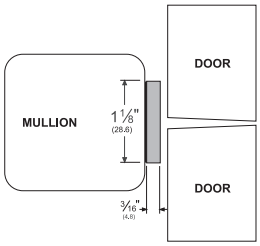

ADHESIVE-BACKED ASTRAGAL SEAL

S1125 _

AVAILABLE FINISH: **D**
AVAILABLE LENGTHS: **7', 8', 10'**

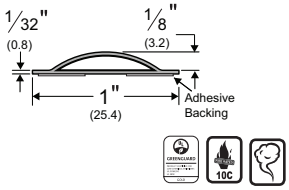

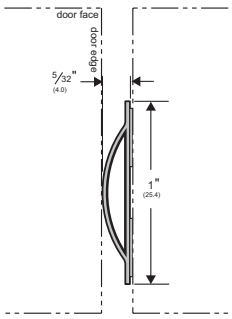

OFFSET SECURITY BAR

- For use on single outswing wood or metal doors
- Covers gap between the door and jamb for the full door height, preventing prying and manipulation
- 3572_ supplied drilled 12" on center with 3/8" holes; "ND" denotes "no drill"

3572_
3572_ND

AVAILABLE FINISHES:
SP, SPBSP, SPWSP,
SS (#4 Finish & #4 Edge)
AVAILABLE LENGTHS:
80", 84" and 96"

10 GAUGE

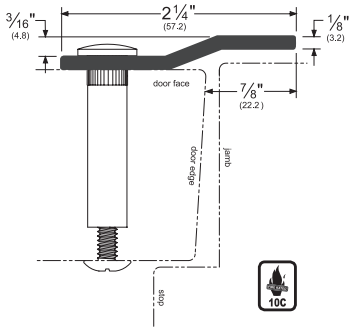

3572PP7
3572PP7ND

AVAILABLE FINISHES:
PP
AVAILABLE LENGTHS:
84"

7 GAUGE

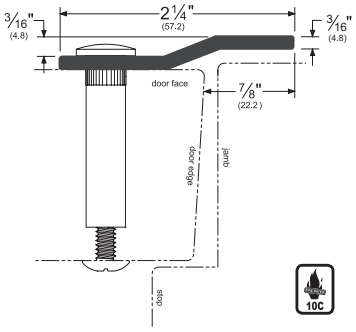

AVAILABLE FINISHES FOR PRODUCTS SHOWN ON THIS PAGE
BL (Black) **BSP** (Black Suede Powder Coat) **C** (Clear Anodized) **D** (Dark Brown) **PP** (Prime Painted)
SP (Galvanized Steel) **SS** (See Individual Part) **SPBSP** (Black Suede Powder Coated Steel)
SPWSP (White Suede Powder Coated Steel)

PEMKO
ASSA ABLOY
Experience a safer and more open world

800-824-3018 | www.pemko.com
Check the web site for the up-to-date catalog

Copyright © 2015-2025, ASSA ABLOY Accessories and Door Controls Group, Inc., an ASSA ABLOY Group company. All rights reserved. Reproduction in whole or in part without the express written permission of ASSA ABLOY Accessories and Door Controls Group, Inc. is prohibited.

LOCKING ASTRAGALS

- Weatherstripped astragals with locking spring bolts or slide bolts for 1¾" inswing double doors
- Odd numbered astragals have economical smooth acting slide bolts. Slide bolts are 4" from the top/bottom standard; optional 18" slide bolt is available for easier access. Even numbered astragals have locking spring bolts. Both have full ⅜" diameter steel bolts with 1 1/16" throw. In the extended and locked position, locking spring bolts cannot be easily retracted by tampering. In the retracted position, the spring loaded bolts latch firmly, preventing marking of the floor and door header trim when opening or closing the inactive door
- Styles **3493** thru **3498** come with a molded sponge neoprene bottom seal
- All feature four-way adjustable strike plate mounting for latchbolt and deadbolt
- All come with a Eco-V™ snap-in cover strip to conceal the cutout and cover the mounting screws
- Astragal stock lengths are 80", 84", 96" and 120"
- A standard deadbolt punchout is ¾" x 4" at 40" on center Punchout supplied on request only
- For non-stock astragals, specify deadbolt punchout size and center distance from top end
- Specify handing using the handing chart on page 181 or 184

Handing Chart For Astragals

(For pages 169 thru 171)

- An astragal is handed by the hand of the active door. The hand of the active door is determined by the position of the hinges on the door, when viewed from the outside (the key side)

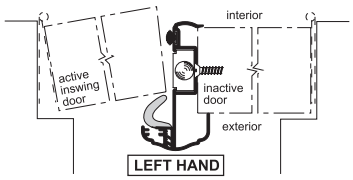

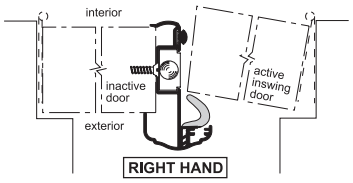

3493_V

Slimline Style with Slide Bolt

REPLACEMENT INSERT: **EV41 (BL, W)**
AVAILABLE FINISHES:
C, G, D, BSP, WSP

- **3493** also available with 18" slide bolt (at additional cost) for easier access (specify "**L**" at the end of the product number for this option i.e. **3493_VL**)

3494_V

Slimline Style with Locking Spring Bolt

REPLACEMENT INSERT: **EV41 (BL, W)**
AVAILABLE FINISHES:
C, G, D, BSP, WSP

Slimline Style

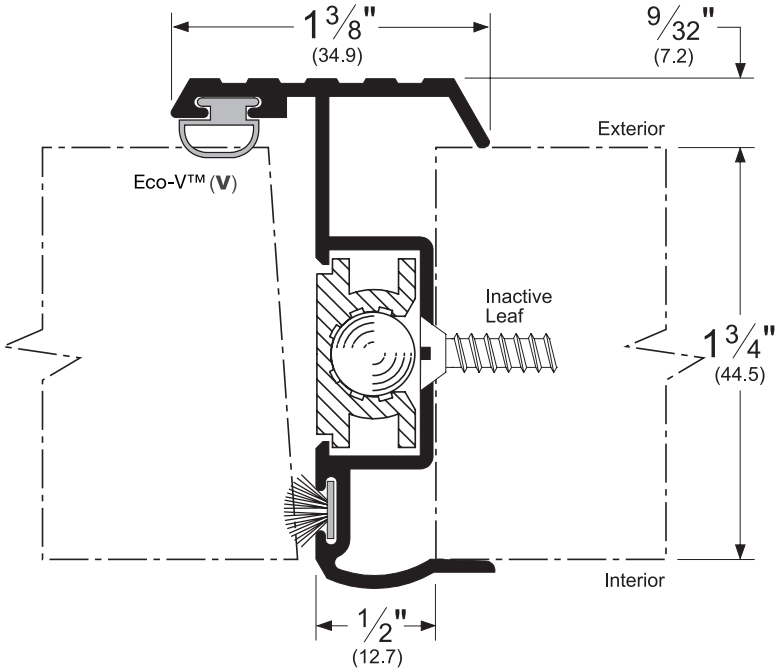

AVAILABLE FINISHES FOR PRODUCTS SHOWN ON THIS PAGE
C (Clear Anodized) **D** (Dark Bronze Anodized) **G** (Gold Anodized) **PW** (White)

Copyright © 2015-2025, ASSA ABLOY Accessories and Door Controls Group, Inc., an ASSA ABLOY Group company. All rights reserved.
Reproduction in whole or in part without the express written permission of ASSA ABLOY Accessories and Door Controls Group, Inc. is prohibited.

PEMKO
ASSA ABLOY
Experience a safer and more open world

800-824-3018 | www.pemko.com
Check the web site for the up-to-date catalog

Copyright © 2015-2025, ASSA ABLOY Accessories and Door Controls Group, Inc., an ASSA ABLOY Group company. All rights reserved.
Reproduction in whole or in part without the express written permission of ASSA ABLOY Accessories and Door Controls Group, Inc. is prohibited.

PEMKO BRUSH GASKETING



CONTENTS:

180° Aluminum Retainers 164
180° Concealed Fastener Retainers 165
90° Aluminum Retainers 166
45° Concealed Fastener Retainers 166
Mortise Retainers 168
Aluminum Retainer with Rain Drip 168
Oak Retainers 168
Meeting Stiles 169

NOTE: For Automatic Door Bottoms with Nylon Brush seals, please see Automatic Door Bottom catalog section.

INDEX:

PRODUCT	PAGE
345	168
3452	168
5025	168
5041	168
5061	168
5100	168
18041	165
18041	169
18050	165
18061	165
18061	169
18062	165
18062W	168
18100	165
18100W	168
18137	164
18175	164
18250	164
18400	164
29324	165
29324	169
29326	165
29326	169
29344	166
29346	166
45041	167
45061	167
45062	167
45100	167
45137	167
45175	167
45250	167
45400	167
90041	166
90062	166
90100	166
90137	166
293100	165

NOTE: For Automatic Door Bottoms with Nylon Brush seals, please see Automatic Door Bottom catalog section.

800-824-3018 | www.pemko.com

Check the web site for the up-to-date catalog

Copyright © 2015-2025, ASSA ABLOY Accessories and Door Controls Group, Inc., an ASSA ABLOY Group company. All rights reserved.
Reproduction in whole or in part without the express written permission of ASSA ABLOY Accessories and Door Controls Group, Inc. is prohibited.

PEMKO
ASSA ABLOY

Experience a safer and more open world

180° ALUMINUM RETAINERS

- All brush seals consist of densely compressed nylon filaments encased in a high quality aluminum retainer. These products are ideally suited for hollow metal and wood door applications. Also use Pemko's brush weatherstripping product on overhead, section, sliding, and automatic doors
- All brush seals reduce the infiltration of light, air, wind, rain, and snow; prevent heat loss; and control the penetration of smoke and fumes
- Brush remains flexible down to -40°F and has a melting point above 400°F
- UV stable, dependable, long-lasting, cost-effective
- Punched with slotted holes for adjustment (except 35° angle types which are drilled with 1/8" hole)
- Naturally repels rodents and spiders; can be sprayed with household pest repellent for additional pest control

18137_NB

AVAILABLE FINISHES:
10BE, BSP, C, D, G, PW, WSP
REPLACEMENT INSERT:
P38137 (BL, GR, W)
ANSI: **R3A434**

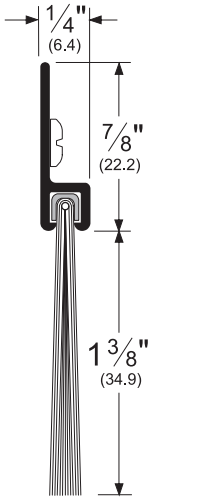

18175_NB

AVAILABLE FINISHES:
10BE, BSP, C, D, WSP
REPLACEMENT INSERT:
P58175 (BL, GR)
ANSI: **R3A434**

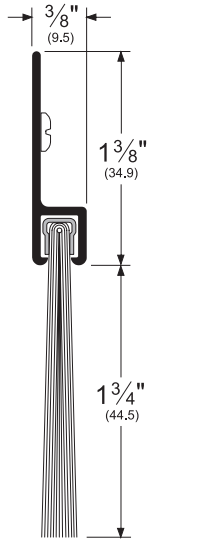

18250_NB

AVAILABLE FINISHES:
10BE, BSP, C, D, WSP
REPLACEMENT INSERT:
P58250 (BL, GR)
ANSI: **R3A434**

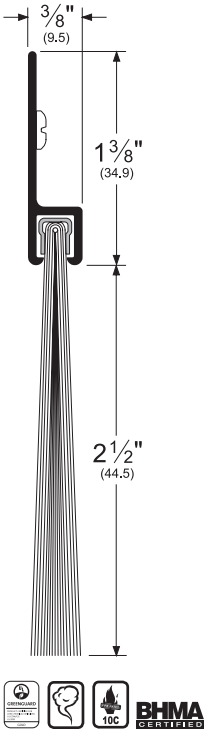

18400_NB

AVAILABLE FINISHES:
10BE, BSP, C, D, WSP
REPLACEMENT INSERT:
P58400 (BL, GR)
ANSI: **R3A434**

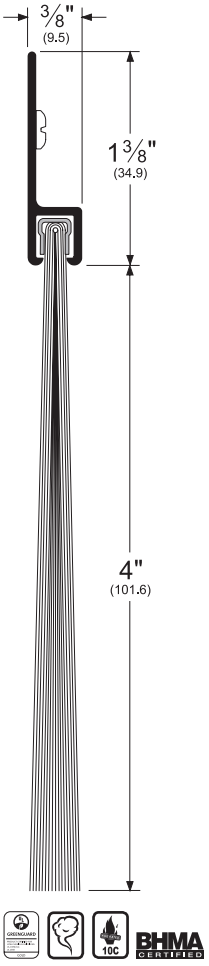

NOTE: Products shown in this section may not be drawn to scale.

AVAILABLE FINISHES FOR PRODUCTS SHOWN ON THIS PAGE
10BE (Satin Bronze Powder Coat) **BSP** (Black Suede Powder Coat) **C** (Clear Anodized)
D (Dark Bronze Anodized) **G** (Gold Anodized) **PW** (Painted White) **WSP** (White Suede Powder Coat)

Copyright © 2015-2025, ASSA ABLOY Accessories and Door Controls Group, Inc., an ASSA ABLOY Group company. All rights reserved. Reproduction in whole or in part without the express written permission of ASSA ABLOY Accessories and Door Controls Group, Inc. is prohibited.

180° ALUMINUM RETAINERS *(Cont.)*

18041_NB
AVAILABLE FINISHES:
10BE, BSP, C, D, G, PW, SN, WSP
REPLACEMENT INSERT:
P516041 (BL, GR)
ANSI: **R3A134, R3A164, R3A734**

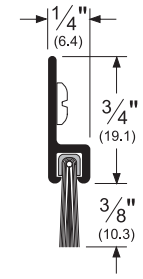

18050_NB
AVAILABLE FINISHES:
10BE, BSP, C, D, G, PW, SN, WSP
REPLACEMENT INSERT:
P516050 (BL, GR)
ANSI: **R3A434, R3A734**

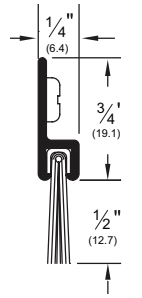

18061_NB
AVAILABLE FINISHES:
10BE, BSP, C, D, G, PW, SN, WSP
REPLACEMENT INSERT:
P516062 (BL, GR, W)
ANSI: **R3A434, R3A734**

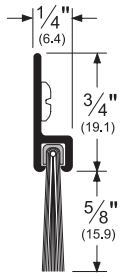

18062_NB
AVAILABLE FINISHES:
10BE, BSP, C, D, G, PW, WSP
REPLACEMENT INSERT:
P38062 (BL, GR, W)
ANSI: **R3A434**

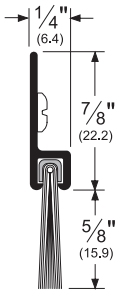

18100_NB
AVAILABLE FINISHES:
10BE, BSP, C, D, G, PW, WSP
REPLACEMENT INSERT:
P38100 (BL, GR)
ANSI: **R3A434**

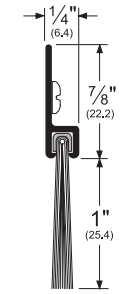

Alternate Inserts For 18041

18041_SB
AVAILABLE FINISHES: **10BE, BSP, C, D, G, PW, SN, WSP**
REPLACEMENT INSERT: **P3 (BL, GR)**


soft brush (**SB**)

Alternate Insert For 18100

18100_NBE
AVAILABLE FINISHES: **BSP, C, D, G, WSP**
REPLACEMENT INSERT: **P38100E (BL)**
ANSI: **R3A434**

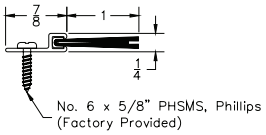

180° CONCEALED FASTENER RETAINERS

- Aluminum snap cover conceals mounting screws to provide a clean aesthetic appearance
- Replacement snap cover is item _29316; when ordering, identify finish and length
- Cover snaps securely into place to deter vandalism

293100_NB
AVAILABLE FINISHES:
10BE, BSP, C, D, WSP
REPLACEMENT INSERT:
P516100 (BL, GR, W)
ANSI: **R3A434**

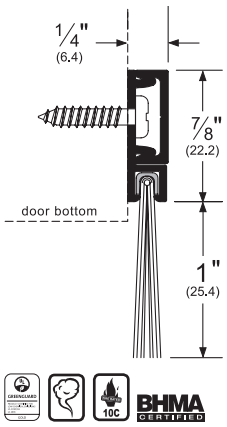

29326_NB
AVAILABLE FINISHES:
10BE, BSP, C, D, G, WSP
REPLACEMENT INSERT:
P516062 (BL, GR, W)
ANSI: **R3A434**

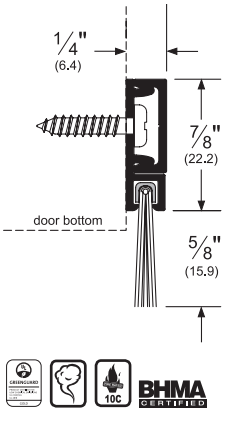

29324_NB
AVAILABLE FINISHES:
10BE, BSP, C, D, G, WSP
REPLACEMENT INSERT:
P516041 (BL, GR)
ANSI: **R3A434**

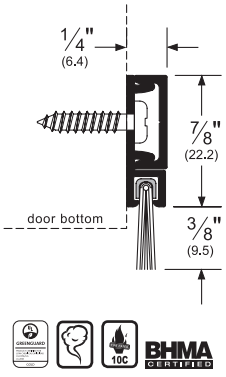

Alternate Insert For 29324

29324_SB
AVAILABLE FINISHES: **10BE, BSP, C, D, WSP**
REPLACEMENT INSERT: **P3 (BL, GR)**


soft brush (**SB**)

Alternate Inserts For 293100

293100_V
AVAILABLE FINISHES:
BSP, C, D, G, WSP
REPLACEMENT INSERT:
EV54 (BL, GR, W)

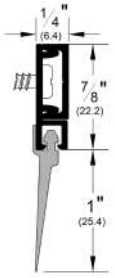

293100_NBE
AVAILABLE FINISHES:
BSP, C, D, G, WSP
REPLACEMENT INSERT:
P516100E (BL)

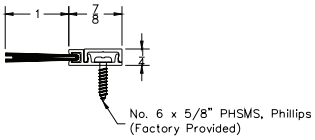

NOTE: Products shown in this section may not be drawn to scale.

AVAILABLE FINISHES FOR PRODUCTS SHOWN ON THIS PAGE
10BE (Satin Bronze Powder Coat) **BSP** (Black Suede Powder Coat) **C** (Clear Anodized)
D (Dark Bronze Anodized) **G** (Gold Anodized) **PW** (Painted White) **SN** (Satin Nickel Anodized)
WSP (White Suede Powder Coat)

Copyright © 2015-2025, ASSA ABLOY Accessories and Door Controls Group, Inc., an ASSA ABLOY Group company. All rights reserved.
Reproduction in whole or in part without the express written permission of ASSA ABLOY Accessories and Door Controls Group, Inc. is prohibited.

PEMKO
ASSA ABLOY
Experience a safer and more open world

90° ALUMINUM RETAINERS

- Design permits use as a concealed seal for many applications
- Slotted holes for easy adjustment

90041_NB
AVAILABLE FINISHES:
10BE, BSP, C, D, WSP
REPLACEMENT INSERT:
P516041 (BL, GR, W)
ANSI: **R3A164, R3A414**

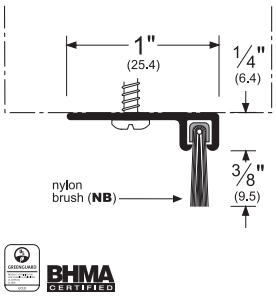

90062_NB
AVAILABLE FINISHES:
10BE, BSP, C, D, WSP
REPLACEMENT INSERT:
P516062 (BL, GR, W)
ANSI: **R3A164, R3A414**

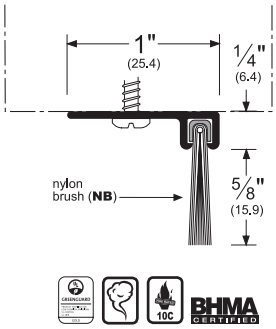

90100_NB
AVAILABLE FINISHES:
10BE, BSP, C, D, WSP
REPLACEMENT INSERT:
P516100 (BL, GR, W)
ANSI: **R3A414**

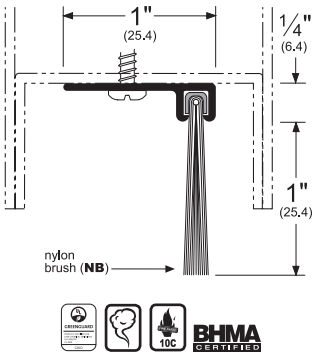

90137_NB
AVAILABLE FINISHES:
10BE, BSP, C, D, WSP
REPLACEMENT INSERT:
P516137 (BL, GR, W)
ANSI: **R3A414**

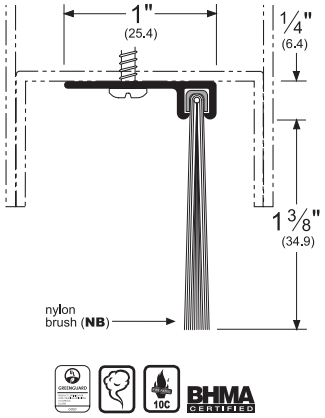

Alternate Insert For 90041

90041_SB
AVAILABLE FINISHES: **10BE, BSP, C, D, WSP**
REPLACEMENT INSERT: **P3 (BL, GR)**



Alternate Insert For 90100

90100_NBE
AVAILABLE FINISHES: **BSP, C, D, WSP**
REPLACEMENT INSERT: **P516100E (BL)**
ANSI: **R3A414**
- For hollow metal doors with inverted channel

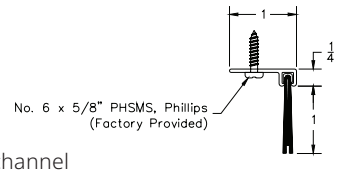

45° CONCEALED FASTENER RETAINERS

- Replacement snap cover is item _29316-.
  When ordering, identify finish and length

29344_NB
AVAILABLE FINISHES: **10BE, BSP, C, D, WSP**
REPLACEMENT INSERT: **P516041 (BL, GR)**
ANSI: **R3A164**

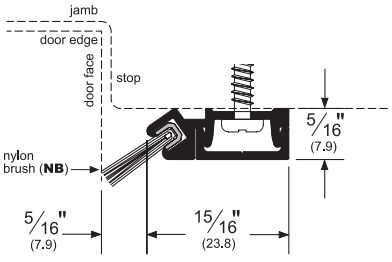

29346_NB
AVAILABLE FINISHES: **10BE, BSP, C, D, WSP**
REPLACEMENT INSERT: **P516062 (BL, GR, W)**
ANSI: **R3A164**

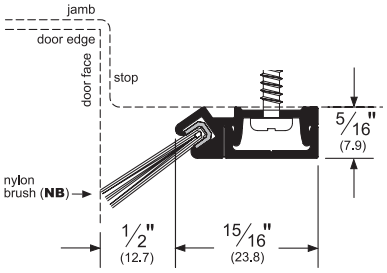

Alternate Insert For 29344

29344_SB
AVAILABLE FINISHES:
10BE, BSP, C, D, WSP
REPLACEMENT INSERT: **P3 (BL, GR)**



NOTE: Products shown in this section may not be drawn to scale.

AVAILABLE FINISHES FOR PRODUCTS SHOWN ON THIS PAGE
10BE (Satin Bronze Powder Coat) **BSP** (Black Suede Powder Coat) **C** (Clear Anodized)
D (Dark Bronze Anodized) **WSP** (White Suede Powder Coat)

Copyright © 2015-2025, ASSA ABLOY Accessories and Door Controls Group, Inc., an ASSA ABLOY Group company. All rights reserved. Reproduction in whole or in part without the express written permission of ASSA ABLOY Accessories and Door Controls Group, Inc. is prohibited.

45° ALUMINUM RETAINERS

- Slotted holes for easy adjustment

45061_NB

AVAILABLE FINISHES:
10BE, BSP, C, D, WSP
REPLACEMENT INSERT:
P516062 (BL, GR, W)
ANSI: **R3A164**

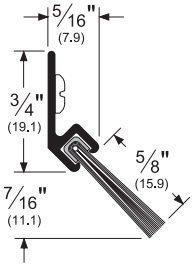

45062_NB

AVAILABLE FINISHES:
10BE, BSP, C, D, WSP
REPLACEMENT INSERT:
P38062 (BL, GR, W)
ANSI: **R3A164**

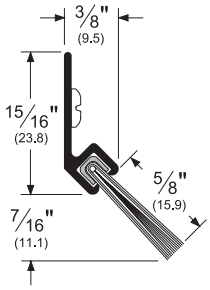

45100_NB

AVAILABLE FINISHES:
10BE, BSP, C, D, WSP
REPLACEMENT INSERT:
P38100 (BL, GR)
ANSI: **R3A164**

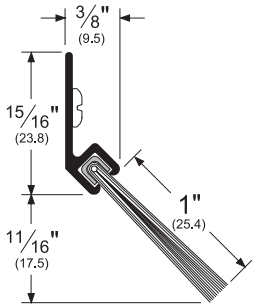

45137_NB

AVAILABLE FINISHES:
10BE, BSP, C, D, WSP
REPLACEMENT INSERT:
P58137 (BL, GR, W)
ANSI: **R3A164**

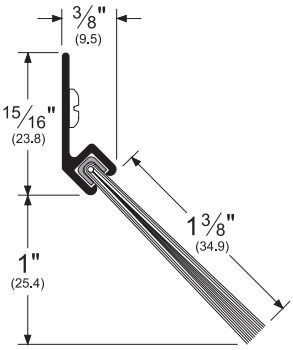

45041_NB

AVAILABLE FINISHES:
10BE, BSP, C, D, WSP
REPLACEMENT INSERT:
P516041 (BL, GR)
ANSI: **R3A164**

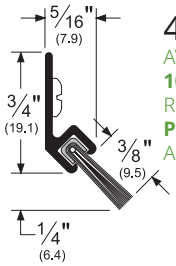

Alternate Insert For 45100

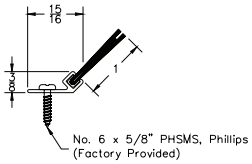

45100_NBE

AVAILABLE FINISHES:
10BE, BSP, C, D, WSP
REPLACEMENT INSERT:
P38100E (BL)
ANSI: **R3A164**

Alternate Insert For 45041

45041_SB

AVAILABLE FINISHES:
10BE, BSP, C, D, WSP
REPLACEMENT INSERT:
P3 (BL, GR)


soft brush (**SB**)

45175_NB

AVAILABLE FINISHES:
10BE, BSP, C, D, WSP
REPLACEMENT INSERT:
P58175 (BL, GR)
ANSI: **R3A164**

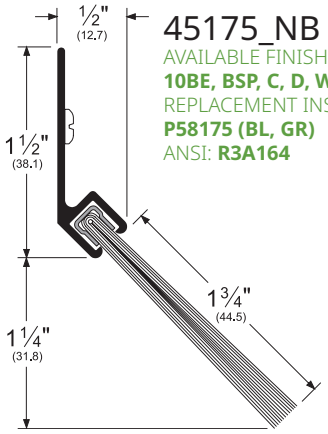

45250_NB

AVAILABLE FINISHES:
10BE, BSP, C, D, WSP
REPLACEMENT INSERT:
P58250 (BL, GR)
ANSI: **R3A164**

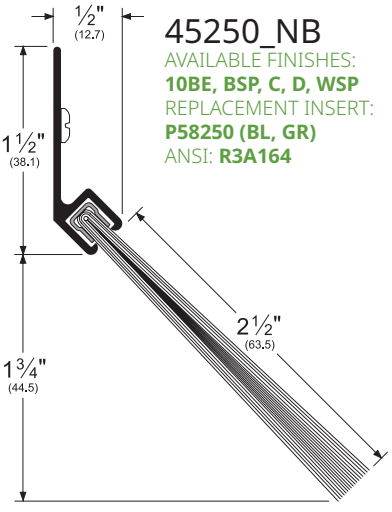

45400_NB

AVAILABLE FINISHES:
10BE, BSP, C, D, WSP
REPLACEMENT INSERT:
P58400 (BL, GR)
ANSI: **R3A164**

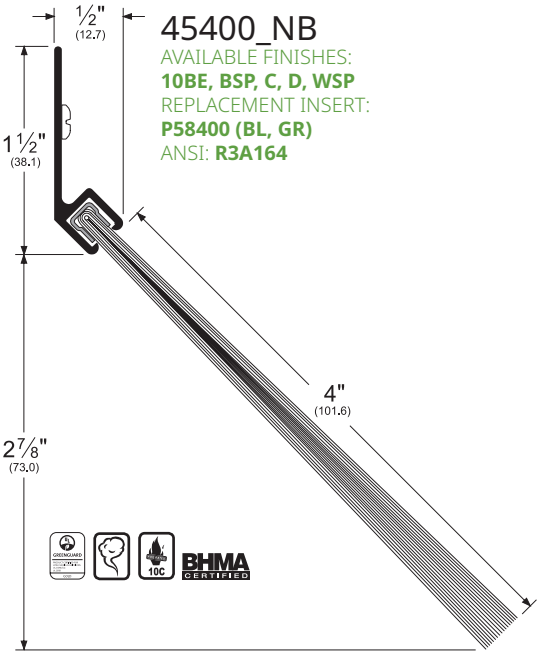

NOTE: Products shown in this section may not be drawn to scale.

AVAILABLE FINISHES FOR PRODUCTS SHOWN ON THIS PAGE
10BE (Satin Bronze Powder Coat) **BSP** (Black Suede Powder Coat) **C** (Clear Anodized)
D (Dark Bronze Anodized) **WSP** (White Suede Powder Coat)

800-824-3018 | www.pemko.com
Check the web site for the up-to-date catalog

Copyright © 2015-2025, ASSA ABLOY Accessories and Door Controls Group, Inc., an ASSA ABLOY Group company. All rights reserved.
Reproduction in whole or in part without the express written permission of ASSA ABLOY Accessories and Door Controls Group, Inc. is prohibited.

PEMKO
ASSA ABLOY
Experience a safer and more open world

MORTISE RETAINERS

- The ultimate design for concealed weatherstrip needs
- Can be used on doors, windows and more

5025_NB
AVAILABLE FINISH: **A**
REPLACEMENT INSERT:
P14025 (BL)

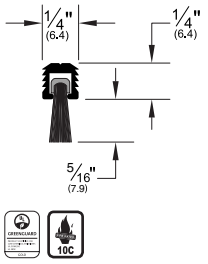

5041_NB
AVAILABLE FINISH: **A**
REPLACEMENT INSERT:
P516041 (BL, GR)

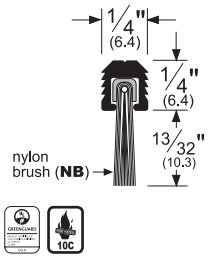

5061_NB
AVAILABLE FINISH: **A**
REPLACEMENT INSERT:
P516062 (BL, GR, W)

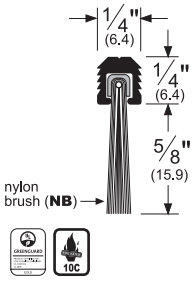

5100_NB
AVAILABLE FINISH: **A**
REPLACEMENT INSERT:
P516100 (BL, GR, W)

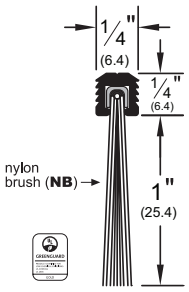

Alternate Insert For 5100

5100_NBE
AVAILABLE FINISH: **A**
REPLACEMENT INSERT:
P516100E (BL)

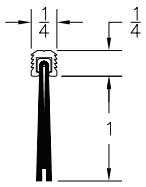

Alternate Insert For 5025 and 5041

5025_SB
AVAILABLE FINISHES: **A**
REPLACEMENT INSERT:
SB14025 (BL)

5041_SB
AVAILABLE FINISHES: **A**
REPLACEMENT INSERT:
P3 (BL, GR)



ALUMINUM RETAINER WITH RAIN DRIP

- Slotted holes for easy adjustment

345_NB
AVAILABLE FINISHES:
10BE, A, BSP, D, G, WSP
REPLACEMENT INSERT:
P14100 (BL, GR)
ANSI: **R3A534**

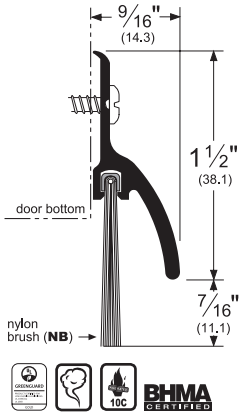

3452_NB
AVAILABLE FINISHES:
10BE, A, BSP, D, G, WSP
REPLACEMENT INSERT:
P14075 (BL, GR)
ANSI: **R3A534**

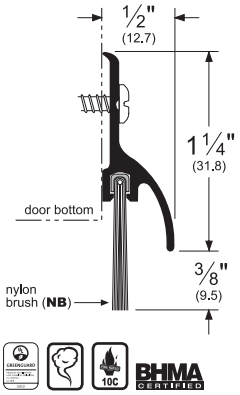

OAK RETAINERS 36" WIDE

- These products have 1/8" drilled fastener holes

18062WNB
AVAILABLE FINISH: **W**
REPLACEMENT INSERT:
P516062 (BL, GR, W)

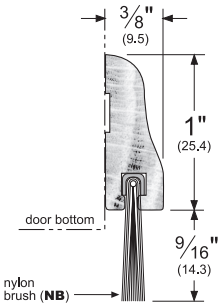

18100WNB
AVAILABLE FINISH: **W**
REPLACEMENT INSERT:
P516100 (BL, GR)

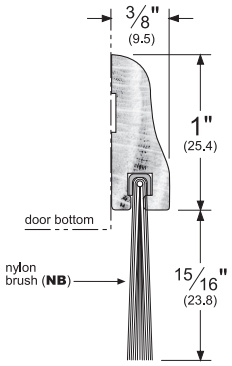

NOTE: Products shown in this section may not be drawn to scale.

AVAILABLE FINISHES FOR PRODUCTS SHOWN ON THIS PAGE
10BE (Satin Bronze Powder Coat) **A** (Mill Finish Aluminum) **BSP** (Black Suede Powder Coat) **C** (Clear Anodized)
D (Dark Bronze Anodized) **G** (Gold Anodized) **W** (Unfinished Solid Oak) **WSP** (White Suede Powder Coat)

Copyright © 2015-2025, ASSA ABLOY Accessories and Door Controls Group, Inc., an ASSA ABLOY Group company. All rights reserved. Reproduction in whole or in part without the express written permission of ASSA ABLOY Accessories and Door Controls Group, Inc. is prohibited.

MEETING STILES

- Astragals and Meeting Stiles with a fire label may be mounted on pairs of doors wherein the gap meets the requirements of NFPA 80-2013, 6.3.1.7.1 **"The clearance between... the meeting edges of doors swinging in pairs on the pull side shall be 1/8" ± 1/16" (3.18mm ± 1.59mm) for steel doors and shall not exceed 1/8" (3.18mm) for wood doors"**
- Snap cover helps prevent vandalism and adds an attractive finished look by concealing the fasteners
- Replacement snap cover is item _29316. When ordering, identify finish and length
- NOTE: Although drawn with a gap between the brush, when installed, these brush products SHOULD make contact. Brush should mesh from 1/32" to 1/16"

18041_NB

AVAILABLE FINISHES: **10BE, BSP, C, D, G, SN, WSP**
REPLACEMENT INSERT: **P516041 (BL, GR)**
ANSI: **R3A734**

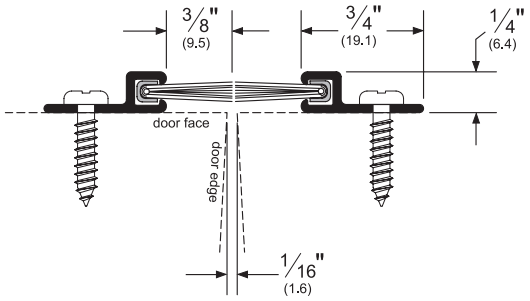

29324_NB

AVAILABLE FINISHES: **10BE, BSP, C, D, G, SN, WSP**
REPLACEMENT INSERT: **P516041 (BL, GR)**
ANSI: **R3A434, R3A435**

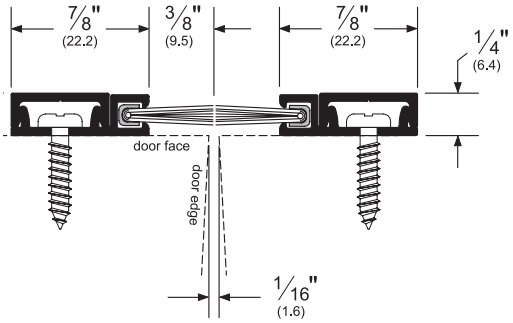

Alternate Insert For 18041

18041_SB
AVAILABLE FINISHES
10BE, BSP, C, D, G, SN, WSP
REPLACEMENT INSERT: **P3 (BL, GR)**



Alternate Insert For 29324

29324_SB
AVAILABLE FINISHES:
10BE, BSP, C, D, G, SN, WSP
REPLACEMENT INSERT: **P3 (BL, GR)**



18061_NB

AVAILABLE FINISHES: **10BE, BSP, C, D, G, SN, WSP**
REPLACEMENT INSERT: **P516062 (BL, GR, W)**
ANSI: **R3A734**

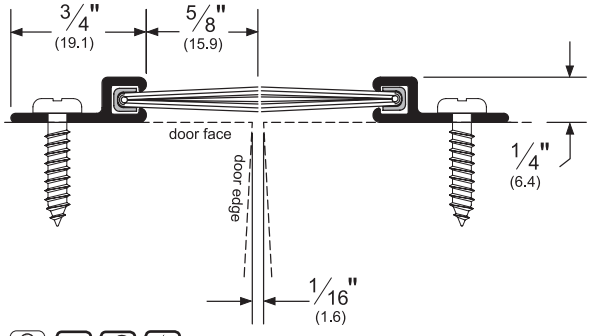

29326_NB

AVAILABLE FINISHES: **10BE, BSP, C, D, G, SN, WSP**
REPLACEMENT INSERT: **P516062 (BL, GR, W)**
ANSI: **R3A764, R3A765**

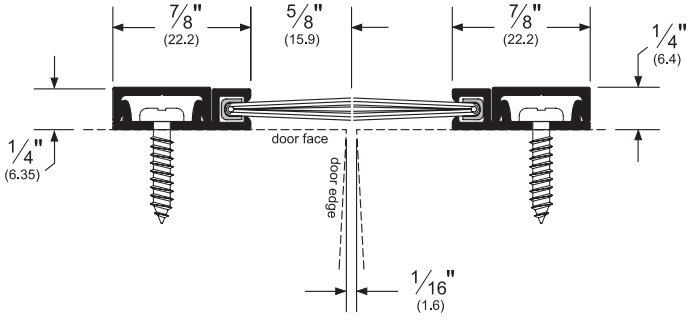

NOTE: Products shown in this section may not be drawn to scale.

AVAILABLE FINISHES FOR PRODUCTS SHOWN ON THIS PAGE
10BE (Satin Bronze Powder Coat) **BSP** (Black Suede Powder Coat) **C** (Clear Anodized)
D (Dark Bronze Anodized) **G** (Gold Anodized) **SN** (Satin Nickel Anodized) **WSP** (White Suede Powder Coat)

800-824-3018 | www.pemko.com
Check the web site for the up-to-date catalog

Copyright © 2015-2025, ASSA ABLOY Accessories and Door Controls Group, Inc., an ASSA ABLOY Group company. All rights reserved.
Reproduction in whole or in part without the express written permission of ASSA ABLOY Accessories and Door Controls Group, Inc. is prohibited.

PEMKO
ASSA ABLOY
Experience a safer and more open world

800-824-3018 | www.pemko.com
Check the web site for the up-to-date catalog

Copyright © 2015-2025, ASSA ABLOY Accessories and Door Controls Group, Inc., an ASSA ABLOY Group company. All rights reserved.
Reproduction in whole or in part without the express written permission of ASSA ABLOY Accessories and Door Controls Group, Inc. is prohibited.

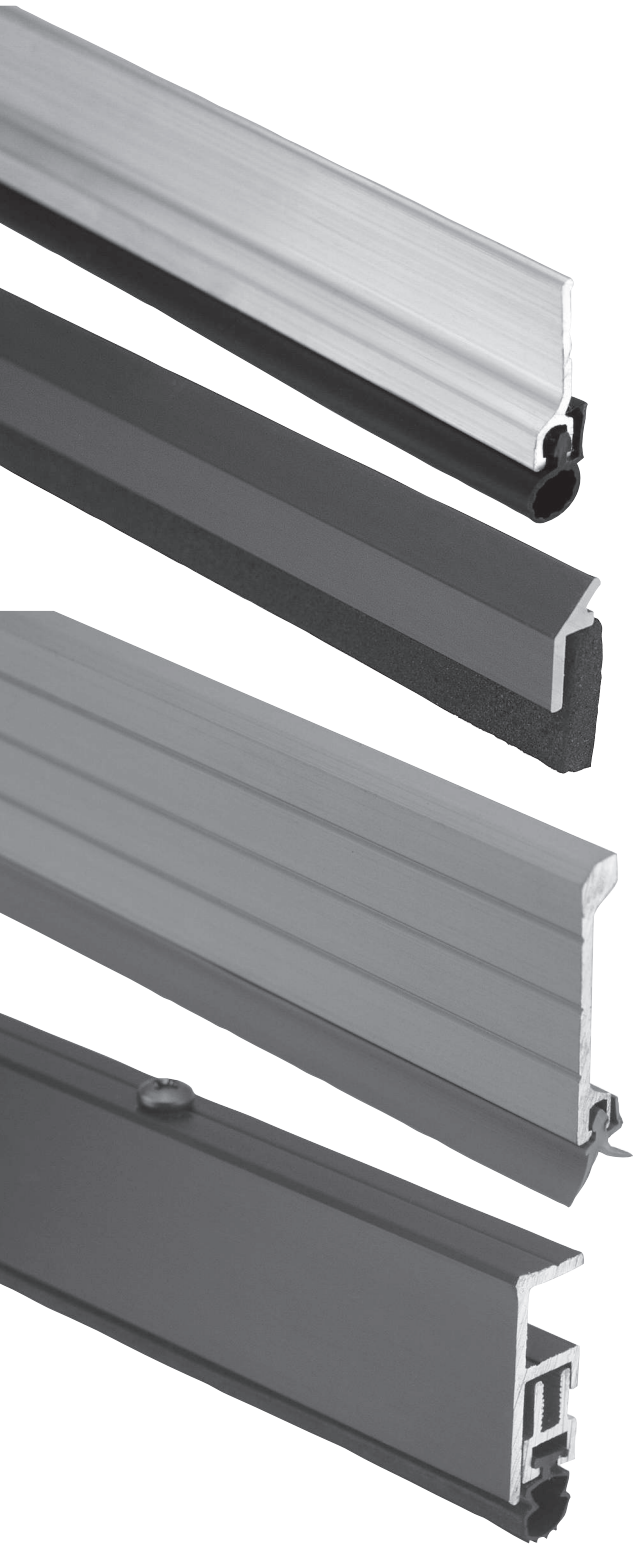

CONTENTS:

Standard Perimeter Gasketing 172
Perimeter Gasket Solutions for Sliding Doors 175
Stainless Steel Perimeter Gasketing 176
Adjustable Jamb Gasketing 177
Heavy Duty Interlock Perimeter Gasketing 177
Heavy Duty Perimeter Gasketing - Head Section 178
Heavy Duty Perimeter Gasketing - Standard Jamb 179
Perimeter Gasket Jamb Brackets 179
Snap Cover Perimeter Gasketing With Concealed Fasteners 180
Kerf-In Weatherstrip 181
Magnetic Weatherstrip 182
Adhesive Perimeter Gasketing 182
MicroShield® Antimicrobial Adhesive Gasketing 183
Excessive Gap Perimeter Solutions 184
Interlock Weatherstrip For Wood Windows 184
Interlock Weatherstrip For Wood Doors 185
Cushion/Spring Weatherstrip 185
Fasteners for Cushion, Spring and Interlock Weatherstrip 185
Privacy Seals for Sliding Doors 186

INDEX:

PRODUCT	PAGE
2P	184
4C	184
4P	184
10	184
41M	185
43	185
70C-100	185
70E-99	185
73	185
74	185
75	185
285	174
290	179
294	175
296	174
297	172
303	172
305	173
305SS	176
306	175
309	175
312	174
315	174
315SS	176
316	172
319	173
319SS	176
322	177
330	174
332	173
335	177
336	177
350	177
375	173
379	177
394	175
394	186
950	175
950	186
2815_M	182
2891	178
2892	178
2893	178
2902	179
2903	179
3151	174
29310	180
29313	180
29326	180
29344	180
29346	180
29394	175
29394	186
AM88	183
BKT050	179
BKT075	179
EZGAP™ XG10	184
HSS20XGxS773	184
MAG349	182
NL1678	185
NL1734CPXE	185
NL13516	185
P50	182
P51B17	185
PEMKOSFSET	186
PK33	183
PK52	182
PK55	183
PY900	175
Q102	181
Q103	181
Q106	181
Q107	181
Q108	181
S44	182
S52	181
S77	183
S88	182
S104	181
S105	181
S109	181
S442	183
S771x6	183
S773	182
S776	183
XG90KIT	184
XG900	184
XGSHIM	184

800-824-3018 | www.pemko.com

Check the web site for the up-to-date catalog

Copyright © 2015-2025, ASSA ABLOY Accessories and Door Controls Group, Inc., an ASSA ABLOY Group company. All rights reserved.
Reproduction in whole or in part without the express written permission of ASSA ABLOY Accessories and Door Controls Group, Inc. is prohibited.

PEMKO
ASSA ABLOY

Experience a safer
and more open world

STANDARD PERIMETER GASKETING

- Rigid jamb weatherstrip shown mounted on openings with 1/16" gaps; however, each weatherstrip can seal gaps up to the depth of its seal. Seal depth provided on each illustration (example: the 303 has a 1/4" seal; therefore, it can seal up to a 1/4" gap)
- Punched on 6" centers with slotted holes for adjustment. Models 294, 303, and 306 are available with self-adhesive two-sided tape (TST) and tek screws (3 slotted holes per part) for easy installation. To obtain this option, add "TST" to the end of the part when ordering (example: 303AVTST)

303_S

AVAILABLE FINISHES:
10BE, 4E, A, BSP, C, D, G, SN, WSP
REPLACEMENT INSERT: **S3 (BL, W)**
ANSI: **R3E164, R3E165**

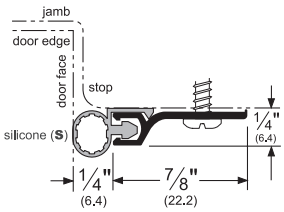

303_PK

AVAILABLE FINISHES:
10BE, 4E, A, BSP, C, D, G, PW, SN, WSP
REPLACEMENT INSERT: **PK47 (BL, GR)**
ANSI: **R3G164**

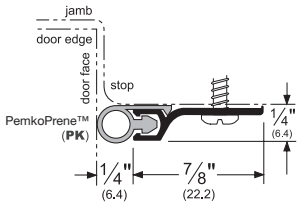

303_V

AVAILABLE FINISHES:
10BE, 4E, A, BSP, C, D, G, PW, SN, WSP
REPLACEMENT INSERT: **EV47 (BL, GR, W)**

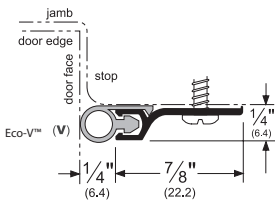

316_S

AVAILABLE FINISHES:
10BE, 4E, A, BSP, D, G, WSP
REPLACEMENT INSERT: **S3 (BL, W)**
ANSI: **R3E164, R3E165**

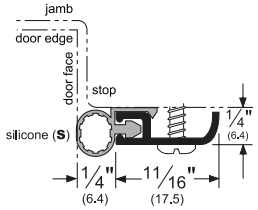

316_PK

AVAILABLE FINISHES:
10BE, 4E, A, BSP, D, G, WSP
REPLACEMENT INSERT: **PK47 (BL, GR)**
ANSI: **R3G164, R3G165**

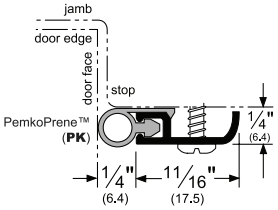

316_V

AVAILABLE FINISHES:
10BE, 4E, A, BSP, D, G, WSP
REPLACEMENT INSERT: **EV47 (BL, GR, W)**

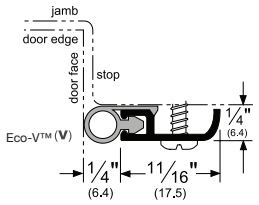

297_S

AVAILABLE FINISHES:
10BE, 4E, A, BSP, D, PW, SN, WSP
REPLACEMENT INSERT: **S3 (BL, W)**
ANSI: **R3E164, R3E165**

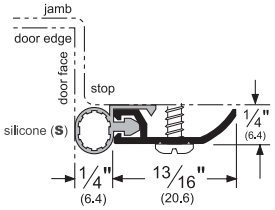

297_PK

AVAILABLE FINISHES:
10BE, 4E, A, BSP, D, PW, SN, WSP
REPLACEMENT INSERT: **PK47 (BL, GR)**
ANSI: **R3G164, R3G165**

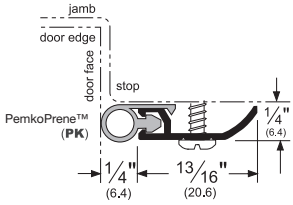

297_V

AVAILABLE FINISHES:
10BE, 4E, A, BSP, D, PW, SN, WSP
REPLACEMENT INSERT: **EV47 (BL, GR, W)**

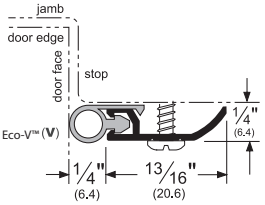

NOTE: Products shown in this section may not be drawn to scale.

AVAILABLE FINISHES FOR PRODUCTS SHOWN ON THIS PAGE
10BE (Satin Bronze Powder Coat) **4E** (Translucent Brass Powder Coat) **A** (Mill Finish Aluminum)
BSP (Black Suede Powder Coat) **C** (Clear Anodized) **D** (Dark Bronze Anodized **G** (Gold Anodized)
PW (Painted White) **SN** (Satin Nickel Anodized) **WSP** (White Suede Powder Coat)

Copyright © 2015-2025, ASSA ABLOY Accessories and Door Controls Group, Inc., an ASSA ABLOY Group company. All rights reserved. Reproduction in whole or in part without the express written permission of ASSA ABLOY Accessories and Door Controls Group, Inc. is prohibited.

STANDARD PERIMETER GASKETING *(Cont.)*

305_N

AVAILABLE FINISHES:
10BE, B, BSP, C, D, WSP
REPLACEMENT INSERT: **E2 (BL)**
ANSI (alum): **R3G164, R3G165**
ANSI (brass): **R1G164, R1G165**

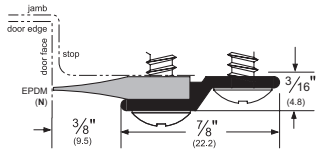

305_R

AVAILABLE FINISHES:
10BE, B, BSP, C, D, G, WSP
REPLACEMENT INSERT: **ER1 (BL)**
ANSI (alum): **R3G164, R3G165**
ANSI (brass): **R1G164, R1G165**

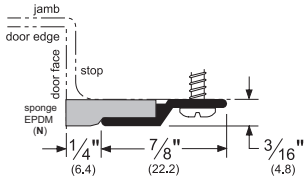

305_S

AVAILABLE FINISHES:
10BE, B, BSP, C, D, G, WSP
REPLACEMENT INSERT: **SR1 (BL)**
ANSI: **R3E164, R3E165**

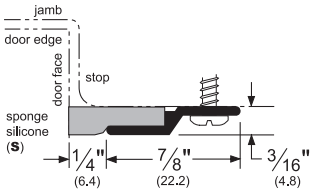

319_N

AVAILABLE FINISHES: **10BE, BSP, C, D, G, WSP**
REPLACEMENT INSERT: **E11 (BL)**
ANSI: **R3G164, R3G165**

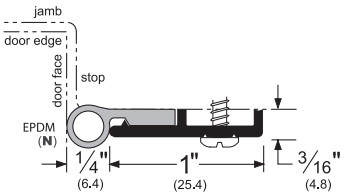

319_R

AVAILABLE FINISHES: **10BE, BSP, C, D, G, WSP**
REPLACEMENT INSERT: **ER1 (BL)**
ANSI: **R3G164, R3G165**

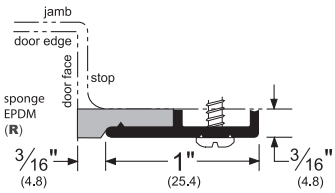

319_S

AVAILABLE FINISHES: **10BE, BSP, C, D, G, WSP**
REPLACEMENT INSERT: **SR1 (BL)**
ANSI: **R3E165**

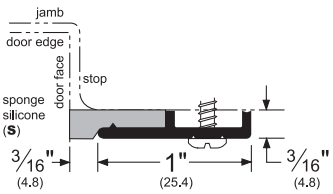

375_R

AVAILABLE FINISHES:
10BE, BSP, C, D, G, WSP
REPLACEMENT INSERT: **ER6 (BL)**
ANSI (alum): **R3C164, R3C165**

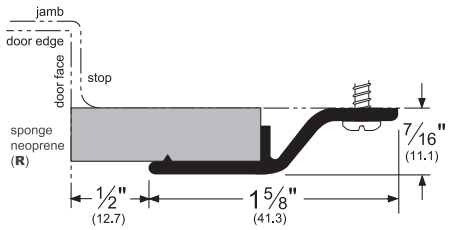

332_R

AVAILABLE FINISHES:
10BE, BSP, C, D, WSP
REPLACEMENT INSERT: **ER1 (BL)**
ANSI: **R3G164, R3G165**

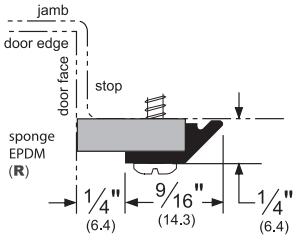

332_S

AVAILABLE FINISHES:
10BE, BSP, C, D, WSP
REPLACEMENT INSERT: **SR1 (BL)**
ANSI: **R3E164, R3E165**

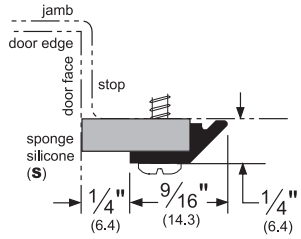

NOTE: Products shown in this section may not be drawn to scale.

AVAILABLE FINISHES FOR PRODUCTS SHOWN ON THIS PAGE
10BE (Satin Bronze Powder Coat) **A** (Mill Finish Aluminum) **B** (Mill Finish Extruded Bronze [Brass])
BSP (Black Suede Powder Coat) **C** (Clear Anodized) **D** (Dark Bronze Anodized
G (Gold Anodized) **WSP** (White Suede Powder Coat)

800-824-3018 | www.pemko.com
Check the web site for the up-to-date catalog

Copyright © 2015-2025, ASSA ABLOY Accessories and Door Controls Group, Inc., an ASSA ABLOY Group company. All rights reserved.
Reproduction in whole or in part without the express written permission of ASSA ABLOY Accessories and Door Controls Group, Inc. is prohibited.

PEMKO
ASSA ABLOY
Experience a safer and more open world

STANDARD PERIMETER GASKETING *(Cont.)*

312_R
AVAILABLE FINISHES:
10BE, BSP, C, D, G, WSP
REPLACEMENT INSERT: **ER9BL (BL)**
ANSI (alum): **R3G164, R3G165**

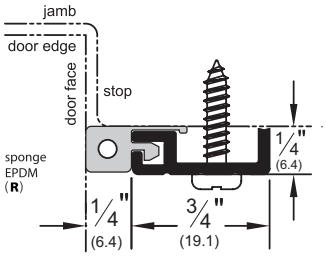

315_R
AVAILABLE FINISHES:
10BE, B, BSP, C, D, WSP
REPLACEMENT INSERT: **ER9BL (BL)**
ANSI (alum): **R3G164, R3G165**
- Please consult website for correct 315BR profile.

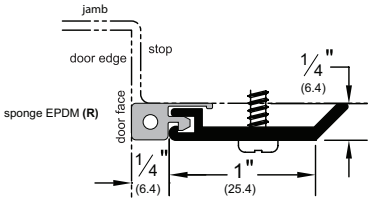

3151_R
AVAILABLE FINISHES:
10BE, BSP, C, D, G, WSP
REPLACEMENT INSERT: **ER2 (BL)**
ANSI (alum): **R3G164**

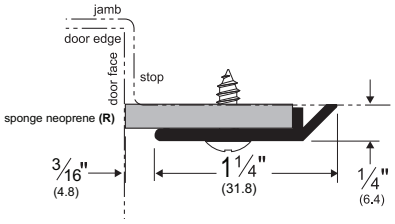

296_S
AVAILABLE FINISHES:
10BE, BSP, C, D, WSP
REPLACEMENT INSERT: **SR6 (BL)**
ANSI (alum): **R3E164, R3E165**

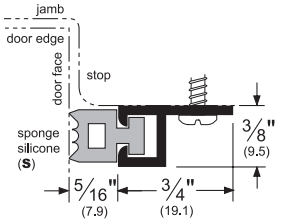

296_PK
AVAILABLE FINISHES:
10BE, BSP, C, D, WSP
REPLACEMENT INSERT: **PK4132 (BL)**
ANSI (alum): **R3G164, R3G165**

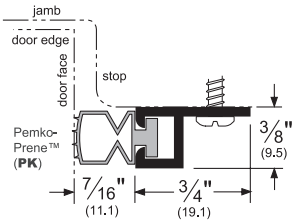

296_R
AVAILABLE FINISHES:
10BE, BSP, C, D, WSP
REPLACEMENT INSERT: **E7 (BL)**
ANSI (alum): **R3G164, R3G165**

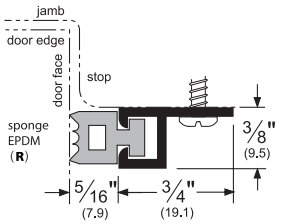

330_V
AVAILABLE FINISHES:
10BE, 4E, A, BSP, D, SN, WSP
REPLACEMENT INSERT: **EV61 (BL, GR)**

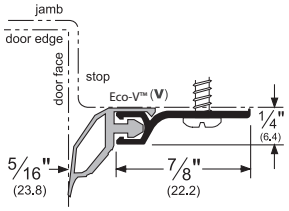

285_PK
AVAILABLE FINISHES:
10BE, BSP, C, D, G, WSP
REPLACEMENT INSERT: **PK4304 (BL)**
ANSI (alum): **R3G164, R3G165**

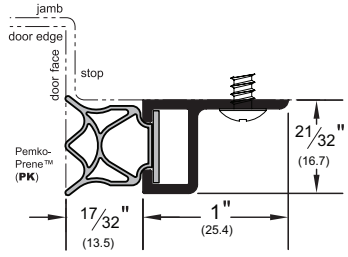

285_R
AVAILABLE FINISHES:
10BE, BSP, C, D, G, WSP
REPLACEMENT INSERT: **E4303 (BL)**
ANSI (alum): **R3G166**

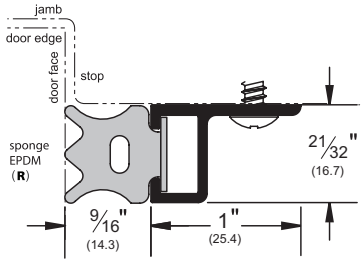

NOTE: Products shown in this section may not be drawn to scale.

AVAILABLE FINISHES FOR PRODUCTS SHOWN ON THIS PAGE
10BE (Satin Bronze Powder Coated Aluminum) **4E** (Translucent Brass Powder Coat) **A** (Mill Finish Aluminum)
B (Mill Finish Extruded Bronze [Brass]) **BSP** (Black Suede Powder Coated Aluminum) **C** (Clear Anodized)
D (Dark Bronze Anodized) **G** (Gold Anodized) **SN** (Satin Nickel Anodized) **WSP** (White Suede Powder Coated Aluminum)

PEMKO
ASSA ABLOY
Experience a safer and more open world

800-824-3018 | www.pemko.com
Check the web site for the up-to-date catalog

Copyright © 2015-2025, ASSA ABLOY Accessories and Door Controls Group, Inc., an ASSA ABLOY Group company. All rights reserved. Reproduction in whole or in part without the express written permission of ASSA ABLOY Accessories and Door Controls Group, Inc. is prohibited.

STANDARD PERIMETER GASKETING *(Cont.)*

306_Q

AVAILABLE FINISHES: **10BE, 4E, A, BSP, D, WSP**
REPLACEMENT INSERT: **Q103 (D, W, BL)**

- Minimum space between the door face and the stop is 3/16"; maximum space is 5/16"
- Note insert color when ordering: Dark Brown (D) or White (W)

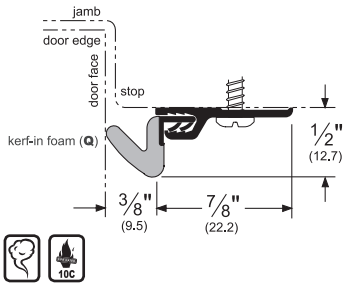

306_V

AVAILABLE FINISHES:
10BE, 4E, A, BSP, D, WSP
REPLACEMENT INSERT: **EV59 (BL, GR)**

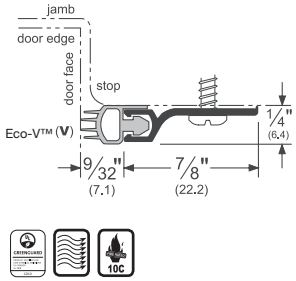

309_P

AVAILABLE FINISHES: **10BE, E, A, BSP, D, WSP**
REPLACEMENT INSERT: **P3 (BL, GR)**

- Minimum space between the door face and the stop is 3/16"; maximum space is 5/16"
- May also be used as a door bottom sweep

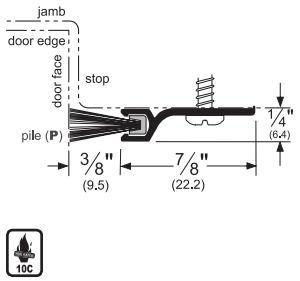

294_V

AVAILABLE FINISHES:
10BE, 4E, A, BSP, D, PW, SN, WSP
REPLACEMENT INSERT: **EV60 (GR)**

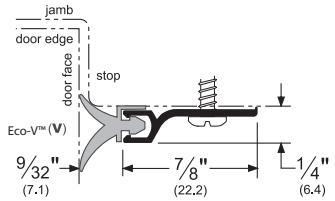

PERIMETER GASKET SOLUTIONS FOR SLIDING DOORS

• For Seal Set information, please see sets outlined on page 202

29394_PK

AVAILABLE FINISHES: **10BE, BSP, C, D, WSP**
REPLACEMENT INSERT: **PK47 (GR, BL)**

- Perimeter sealing, used with 394 wall-mounted ramp

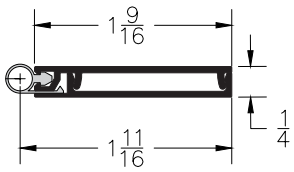

394_

AVAILABLE FINISHES:
10BE, BSP, C, D, WSP

- Wall-mounted ramp used with 29394_PK

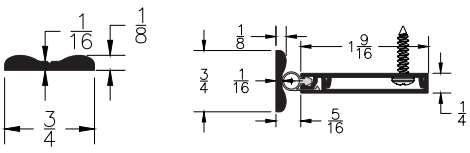

950_

AVAILABLE FINISHES:
10BE, BSP, C, D, WSP
REPLACEMENT INSERT: **PY900 (BL)**

- Head mounted sealing system

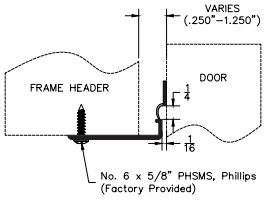

NOTE: Products shown in this section may not be drawn to scale.

AVAILABLE FINISHES FOR PRODUCTS SHOWN ON THIS PAGE
10BE (Satin Bronze Powder Coated Aluminum) **4E** (Translucent Brass Powder Coat) **A** (Mill Finish Aluminum)
BSP (Black Suede Powder Coated Aluminum) **C** (Clear Anodized) **D** (Dark Bronze Anodized)
PW (Painted White) **SN** (Satin Nickel Anodized) **WSP** (White Suede Powder Coated Aluminum)

Copyright © 2015-2025, ASSA ABLOY Accessories and Door Controls Group, Inc., an ASSA ABLOY Group company. All rights reserved.
Reproduction in whole or in part without the express written permission of ASSA ABLOY Accessories and Door Controls Group, Inc. is prohibited.

PEMKO
ASSA ABLOY
Experience a safer and more open world

STAINLESS STEEL PERIMETER GASKETING

- Stainless Steel is a tough and durable material that tolerates exposure to chemicals and heavy use
- Manufactured from 430 Stainless Steel
- Easy to clean to meet sanitary requirements
- Long lasting with low cost of ownership

305SSE

AVAILABLE FINISH: **SS (#4 Finish)**
REPLACEMENT INSERT: **E2 (BL)**
ANSI: **R5G164, R5G165**

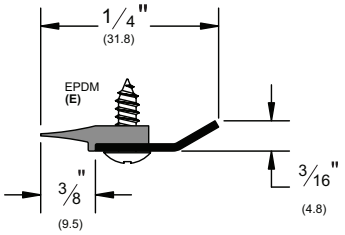

305SSR

AVAILABLE FINISH: **SS (#4 Finish)**
REPLACEMENT INSERT: **ER1 (BL)**
ANSI: **R5G164, R5G165**

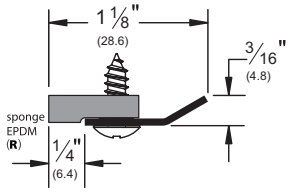

305SSS

AVAILABLE FINISH: **SS (#4 Finish)**
REPLACEMENT INSERT: **SR1 (BL)**
ANSI: **R5E164, R5E165**

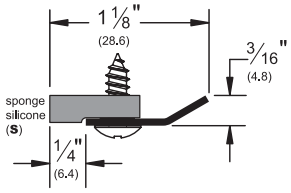

315SSR

AVAILABLE FINISH: **SS (#4 Finish)**
REPLACEMENT INSERT: **ER2 (BL)**
ANSI: **R5G164, R5G165**

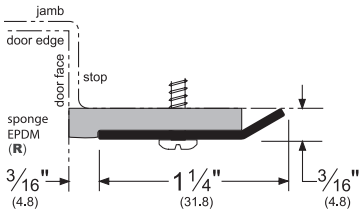

319SSN

AVAILABLE FINISH: **SS (#4 Finish)**
REPLACEMENT INSERT: **E11 (BL)**
ANSI: **R5G164, R5G165**

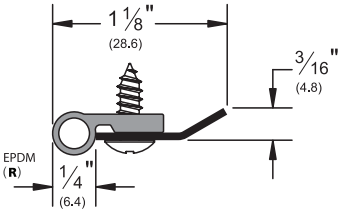

NOTE: Products shown in this section may not be drawn to scale.

AVAILABLE FINISHES FOR PRODUCTS SHOWN ON THIS PAGE
SS (#4 Brushed Finish)

Copyright © 2015-2025, ASSA ABLOY Accessories and Door Controls Group, Inc., an ASSA ABLOY Group company. All rights reserved. Reproduction in whole or in part without the express written permission of ASSA ABLOY Accessories and Door Controls Group, Inc. is prohibited.

ADJUSTABLE JAMB GASKETING

- Adjustable jamb gasketing is shown mounted on openings with 1/16" gaps; however, each weatherstrip can seal gaps up to 1/4"
- Adjustable jamb weatherstrip can adjust 3/16" out from the position illustrated

379_S

AVAILABLE FINISHES: **10BE, BSP, C, D, G, WSP**
REPLACEMENT INSERT: **SR6 (BL)**
ANSI: **R3E264, R3E265**

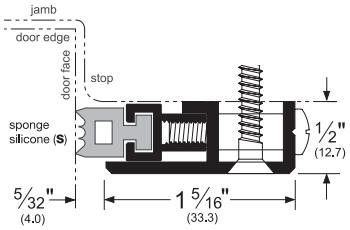

379_PK

AVAILABLE FINISHES: **10BE, BSP, C, D, G, WSP**
REPLACEMENT INSERT: **PK4132 (BL)**
ANSI: **R3G264, R3G265**

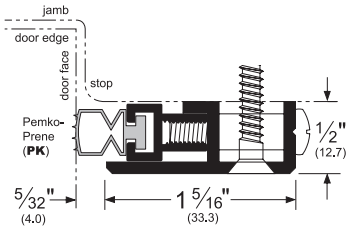

379_R

AVAILABLE FINISHES: **10BE, BSP, C, D, G, WSP**
REPLACEMENT INSERT: **E7 (BL)**
ANSI: **R3G264, R3G265**

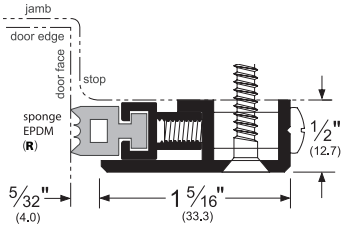

322_SPK

AVAILABLE FINISHES: **10BE, BSP, C, D, WSP**
REPLACEMENT INSERT: **PK121 (BL)**

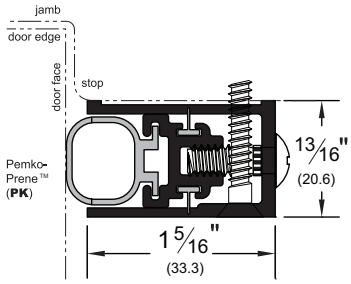

350_SPK

AVAILABLE FINISHES: **10BE, BSP, C, D, WSP**
REPLACEMENT INSERT: **PK4304 (BL)**
ANSI: **R3G164, R3G165**

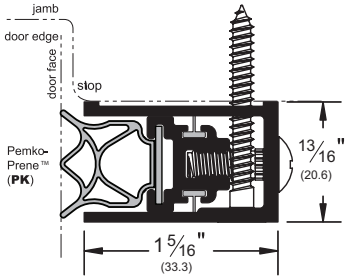

350_SR

AVAILABLE FINISHES: **10BE, BSP, C, D, WSP**
REPLACEMENT INSERT: **E4303 (BL)**
ANSI: **R3G164, R3G165**

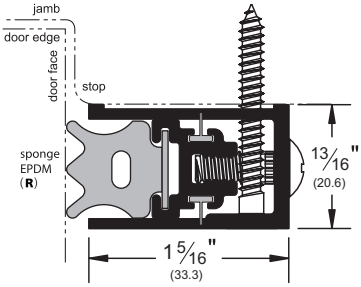

HEAVY DUTY INTERLOCK PERIMETER GASKETING

335_R

AVAILABLE FINISHES: **A**

NOTE: Diagram consists of two parts, each sold separately.

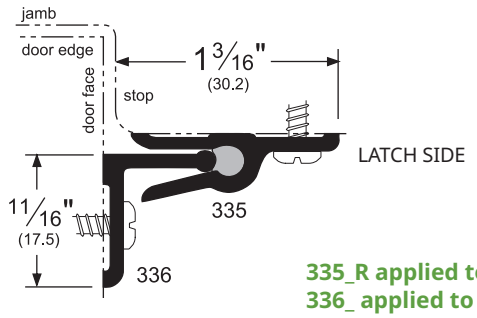

335_R applied to jamb;
336_ applied to door.

336_

AVAILABLE FINISHES: **A**

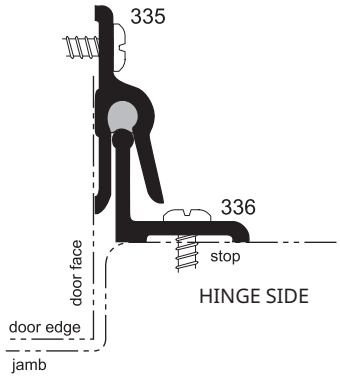

NOTE: Products shown in this section may not be drawn to scale.

AVAILABLE FINISHES FOR PRODUCTS SHOWN ON THIS PAGE

10BE (Satin Bronze Powder Coated Aluminum) **A** (Mill Finish Aluminum) **BSP** (Black Suede Powder Coated Aluminum)
C (Clear Anodized) **D** (Dark Bronze Anodized **G** (Gold Anodized) **WSP** (White Suede Powder Coated Aluminum)

Copyright © 2015-2025, ASSA ABLOY Accessories and Door Controls Group, Inc., an ASSA ABLOY Group company. All rights reserved.
Reproduction in whole or in part without the express written permission of ASSA ABLOY Accessories and Door Controls Group, Inc. is prohibited.

PEMKO
ASSA ABLOY
Experience a safer and more open world

HEAVY DUTY PERIMETER GASKETING - HEAD SECTION

- For the head section of the frame where a parallel arm closer bracket or other hardware is required. Supplied undrilled (36") or drilled (80" and above) and supplied with sheet metal screws for mounting
- If used as a stop, flat head machine screws can be provided upon request and take a countersunk #10 hole. Pemko will drill the head member only if drilling instructions for countersink holes are provided
- All gasketing shown below is sold individually

2891_PK

AVAILABLE FINISHES: **10BE, 4E, A, BSP, D, G, WSP**
REPLACEMENT INSERT: **PK47 (BL, GR)**
ANSI: **R3G164, R3G165**

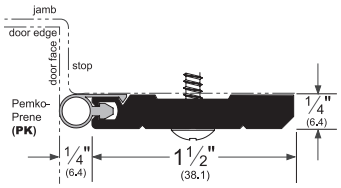

2891_S

AVAILABLE FINISHES: **10BE, 4E, A, BSP, D, G, WSP**
REPLACEMENT INSERT: **S3 (BL, W)**
ANSI: **R3E164, R3E165**

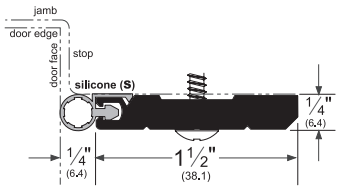

2891_PK

1 per door standard

290_PK

2 per door standard

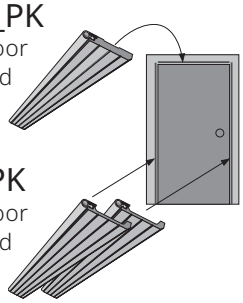

When ordering a head section such as 2891_PK, two corresponding side sections (i.e. 290_PK) should also be ordered for the latch and hinge sides of the frame.

2891_V

AVAILABLE FINISHES: **10BE, 4E, A, BSP, D, WSP**
REPLACEMENT INSERT: **EV47 (BL, GR, W)**

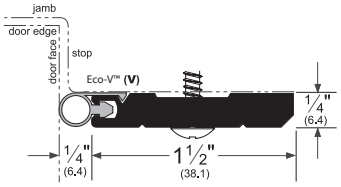

2892_V

AVAILABLE FINISHES: **10BE, 4E, A, BSP, D, WSP**
REPLACEMENT INSERT: **EV59 (BL, GR, W)**

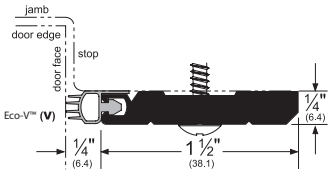

2893_V

AVAILABLE FINISHES: **10BE, 4E, A, BSP, D, WSP**
REPLACEMENT INSERT: **EV60 (GR)**

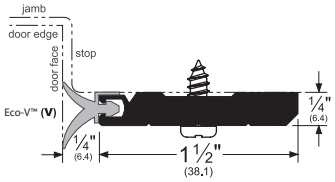

NOTE: Products shown in this section may not be drawn to scale.
AVAILABLE FINISHES FOR PRODUCTS SHOWN ON THIS PAGE
10BE (Satin Bronze Powder Coated Aluminum) **4E** (Translucent Brass Powder Coat) **A** (Mill Finish Aluminum)
BSP (Black Suede Powder Coated Aluminum) **D** (Dark Bronze Anodized) **G** (Gold Anodized)
WSP (White Suede Powder Coated Aluminum)

Copyright © 2015-2025, ASSA ABLOY Accessories and Door Controls Group, Inc., an ASSA ABLOY Group company. All rights reserved. Reproduction in whole or in part without the express written permission of ASSA ABLOY Accessories and Door Controls Group, Inc. is prohibited.

HEAVY DUTY PERIMETER GASKETING - STANDARD JAMB

- For the head section of the frame where a parallel arm closer bracket or other hardware is required. Supplied undrilled (36") or drilled (80" and above) and supplied with sheet metal screws for mounting
- If used as a stop, flat head machine screws can be provided upon request and take a countersunk #10 hole. Pemko will drill the head member only if drilling instructions for countersink holes are provided
- All gasketing shown below is sold individually

290_PK

AVAILABLE FINISHES:
10BE, 4E, A, BSP, D, G, WSP
REPLACEMENT INSERT: **PK47 (BL, GR)**
ANSI: **R3G164, R3G165**

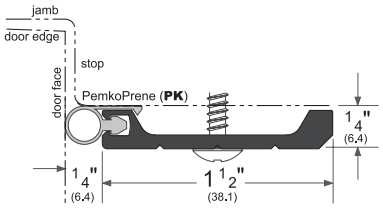

2902_V

AVAILABLE FINISHES:
10BE, 4E, A, BSP, D, G, WSP
REPLACEMENT INSERT: **EV59 (BL, GR, W)**

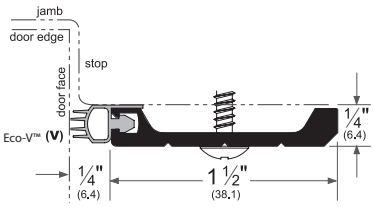

2903_V

AVAILABLE FINISHES:
10BE, 4E, A, BSP, D, G, WSP
REPLACEMENT INSERT: **EV60 (GR)**

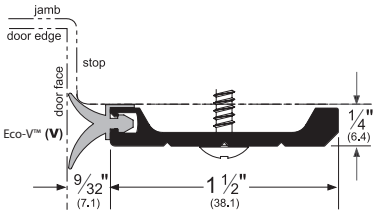

Alternate Inserts For 290

290_S

AVAILABLE FINISHES:
10BE, 4E, A, BSP, D, G, WSP
REPLACEMENT INSERT:
S3 (BL, W)
ANSI: **R3E164, R3E165**



290_V

AVAILABLE FINISHES:
10BE, 4E, A, BSP, D, G, WSP
REPLACEMENT INSERT:
EV47 (BL, GR, W)

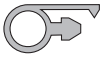

2891_PK

1 per door standard

290_PK

2 per door standard

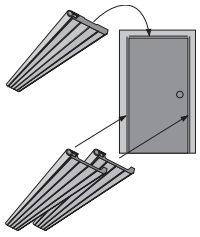

When ordering a head section such as 2891_PK, two corresponding side sections (i.e. 290_PK) should also be ordered for the latch and hinge sides of the frame.

PERIMETER GASKET JAMB BRACKETS

- For use with standard perimeter gasket profiles when opening utilizes a parallel arm closer
- Mount perimeter gasket first, then bracket over the profile. Closer bracket will mount to face of bracket.
- Furnished in paintable galvannealed steel (SP) or gray prime coat (G); available in powder coated finishes
- Supplied in 6" lengths

BKT050_

AVAILABLE FINISHES: **10BE, BSP, SP, G, WSP**

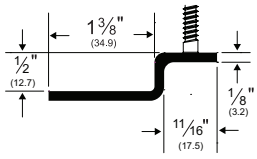

BKT075_

AVAILABLE FINISHES: **10BE, BSP, SP, G, WSP**

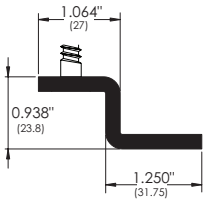

NOTE: Products shown in this section may not be drawn to scale.
AVAILABLE FINISHES FOR PRODUCTS SHOWN ON THIS PAGE
(see General Information section for finish chart)
10BE (Satin Bronze Powder Coated Aluminum) **4E** (Translucent Brass Powder Coat) **A** (Mill Finish Aluminum)
BSP (Black Suede Powder Coated Aluminum) **D** (Dark Bronze Anodized) **G** (Gold Anodized)
WSP (White Suede Powder Coated Aluminum)
AVAILABLE BRACKET FINISHES FOR PRODUCTS SHOWN ON THIS PAGE
G (Gray Prime Painted Steel) **SP** (Galvanized Steel)

Copyright © 2015-2025, ASSA ABLOY Accessories and Door Controls Group, Inc., an ASSA ABLOY Group company. All rights reserved.
Reproduction in whole or in part without the express written permission of ASSA ABLOY Accessories and Door Controls Group, Inc. is prohibited.

PEMKO
ASSA ABLOY
Experience a safer and more open world

SNAP COVER PERIMETER GASKETING WITH CONCEALED FASTENERS

- Low-profile snap cover conceals mounting screws to provide security and a clean aesthetic appearance
- Cover snaps securely in place to deter vandalism
- All clear anodized brush products are supplied with gray brush (black brush available upon request)

29310_V

AVAILABLE FINISHES: **10BE, BSP, C, D, G, WSP**
REPLACEMENT INSERT: **EV41 (BL, GR, W)**

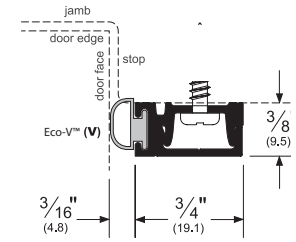

29310_P

AVAILABLE FINISHES: **10BE, BSP, C, D, G, WSP**
REPLACEMENT INSERT: **P2 (BL, GR)**

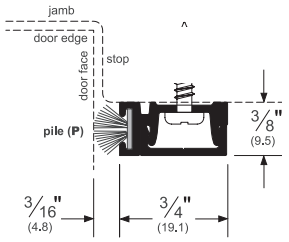

29310_PK

AVAILABLE FINISHES: **10BE, BSP, C, D, G, WSP**
REPLACEMENT INSERT: **PK4 (BL, GR)**
ANSI: **R3G164, R3G165**

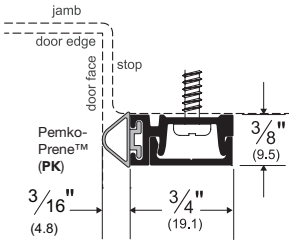

29313_PK

AVAILABLE FINISHES: **10BE, BSP, C, D, WSP**
REPLACEMENT INSERT: **PK588 (BL)**

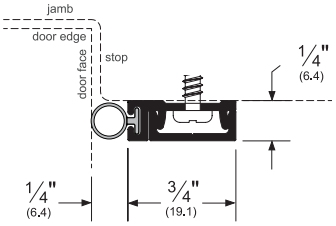

29326_NB

AVAILABLE FINISHES: **10BE, BSP, C, D, G, WSP**
REPLACEMENT INSERT: **P516062 (BL, GR, W)**
ANSI: **R3A164, R3A165**

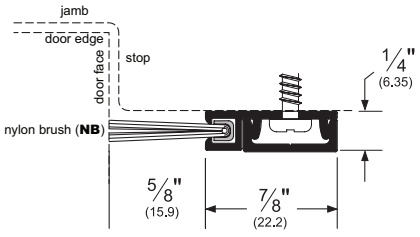

29344_NB

AVAILABLE FINISHES: **10BE, BSP, C, D, G, WSP**
REPLACEMENT INSERT: **P516041 (BL, GR)**
ANSI: **R3A164**

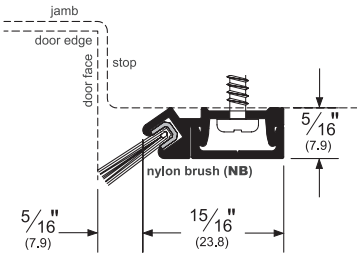

29346_NB

AVAILABLE FINISHES: **10BE, BSP, C, D, G, WSP**
REPLACEMENT INSERT: **P516062 (BL, GR, W)**
ANSI: **R3A164**

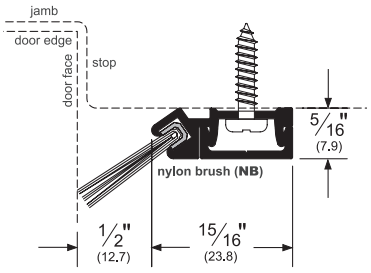

NOTE: Products shown in this section may not be drawn to scale.

AVAILABLE FINISHES FOR PRODUCTS SHOWN ON THIS PAGE
10BE (Satin Bronze Powder Coated Aluminum) **BSP** (Black Suede Powder Coated Aluminum) **C** (Clear Anodized)
D (Dark Bronze Anodized) **G** (Gold Anodized) **WSP** (White Suede Powder Coated Aluminum)

800-824-3018 | www.pemko.com
Check the web site for the up-to-date catalog

PEMKO
ASSA ABLOY
Experience a safer and more open world

Copyright © 2015-2025, ASSA ABLOY Accessories and Door Controls Group, Inc., an ASSA ABLOY Group company. All rights reserved. Reproduction in whole or in part without the express written permission of ASSA ABLOY Accessories and Door Controls Group, Inc. is prohibited.

KERF-IN WEATHERSTRIP

Foam

- Pemko's "Q" foam kerf-in weatherstrip is constructed from soft cell foam enclosed by an embossed, tear-resistant, low-friction, UV-stable polyethylene cover
- Includes rigid PVC insert with extended flange for fast and easy kerf installation

Q102_

AVAILABLE FINISHES: **BL, D, W**
AVAILABLE LENGTHS: **36", 85", 97", 121"**
Minimum space between the door face and the stop is 5/16"; maximum space is 1/2"

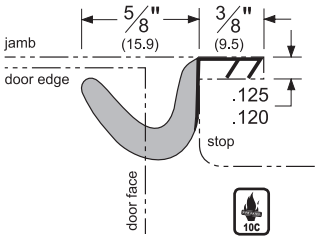

Q103_

AVAILABLE FINISHES: **BL, D, W**
AVAILABLE LENGTHS: **36", 85", 97", 121"**
Minimum space between the door face and the stop is 3/16"; maximum space is 5/16"

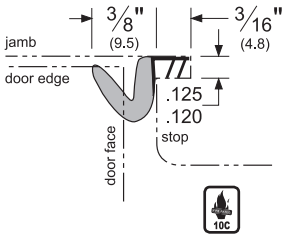

Q106_

AVAILABLE FINISHES: **D, W**
AVAILABLE LENGTHS: **36", 85", 97"**
Minimum space between the door face and the stop is 5/16"; maximum space is 1/2"

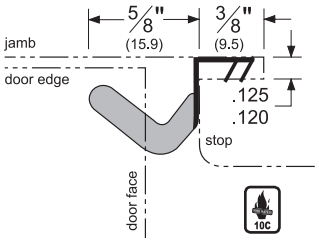

Q107_

AVAILABLE FINISHES: **BL**
Minimum space between the door face and the stop is 1/8"; maximum space is 7/16"
Sold per foot (specify length)

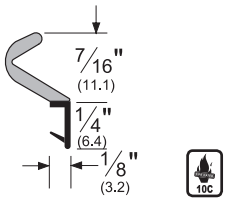

Q108_

AVAILABLE FINISHES: **BL**
Minimum space between the door face and the stop is 1/8"; maximum space is 1/2"
Sold per foot (specify length)

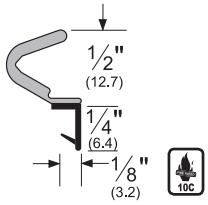

Silicone

- Extruded from platinum cross-linked silicon
- Self-extinguishing and non-toxic
- Unaffected by sunlight, ozone, and ultraviolet rays
- Impervious to fungus and mildew; will not deteriorate under normal exposure
- Available in 100ft lengths

S104_100

AVAILABLE FINISHES: **D, W**
ANSI: **R0E156**
Minimum space between the door face and the stop is 1/16"; maximum space is 1/4"

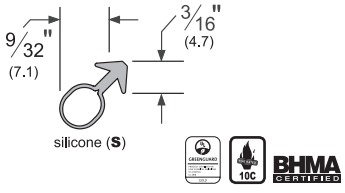

S109_100

AVAILABLE FINISHES: **D, W**
ANSI: **R0E156**
Minimum space between the door face and the stop is 1/16"; maximum space is 5/16"

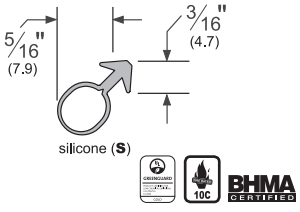

S105_100

AVAILABLE FINISHES: **D**
ANSI: **R0E156**
Minimum space between the door face and the stop is 1/16"; maximum space is 3/8"

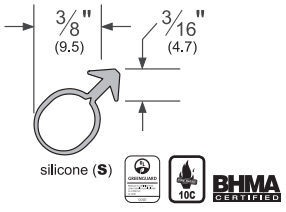

S52_ 100

AVAILABLE FINISHES: **BL, W**
ANSI: **R0E154**
Minimum space between the door face and the stop is 1/16"; maximum space is 3/8"

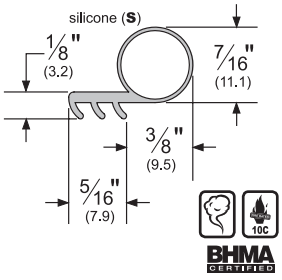

NOTE: Products shown in this section may not be drawn to scale.

AVAILABLE FINISHES FOR PRODUCTS SHOWN ON THIS PAGE
BL (Black) **D** (Black) **W** (White)

Copyright © 2015-2025, ASSA ABLOY Accessories and Door Controls Group, Inc., an ASSA ABLOY Group company. All rights reserved.
Reproduction in whole or in part without the express written permission of ASSA ABLOY Accessories and Door Controls Group, Inc. is prohibited.

PEMKO
ASSA ABLOY
Experience a safer and more open world

KERF-IN WEATHERSTRIP *(Cont.)*

PK52_

AVAILABLE FINISHES: **BL**
ANSI: **R0G154**
AVAILABLE LENGTHS: **18', 20', 300'**

- Minimum space between the door face and the stop is 1/16"; maximum space is 3/8"

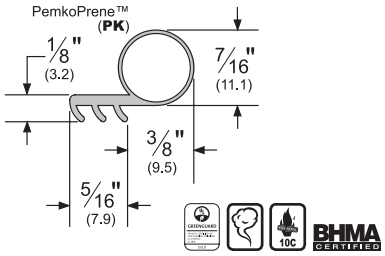

P50_

AVAILABLE FINISHES: **BL**
AVAILABLE LENGTHS: **17', 25', 250'**

- Minimum space between the door face and the stop is 1/16"; maximum space is 5/16".
- Thermoplastic elastomer formulation will not transmigrate; remains flexible to -60° F

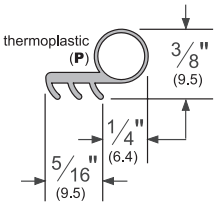

MAG349_

AVAILABLE FINISHES: **D**
AVAILABLE LENGTHS: **37", 85", 96", 121"**

- Minimum space between the door face and the stop is 3/8"; maximum space is 7/16"
- Magnetic kerf-in weatherstrip features a magnetic strip encased by a UV-stable TPE cover
- Use for steel-faced door and wood frame applications
- Can be trimmed in the field and corner-mitered

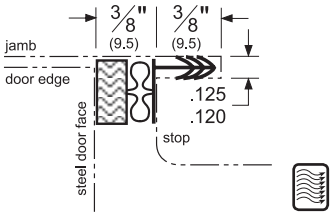

MAGNETIC WEATHERSTRIP

2815_M

AVAILABLE FINISHES: **C, D, G**
REPLACEMENT INSERT: **2815MAG**

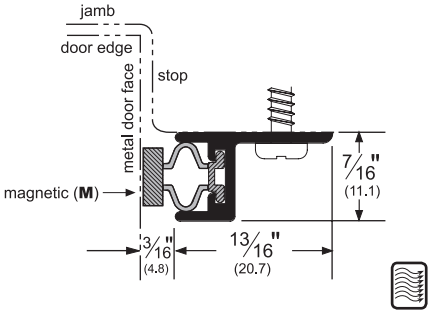

ADHESIVE PERIMETER GASKETING

For more information on these perimeter gasketing products, please see the Adhesive Gasketing section.

S773_

AVAILABLE FINISHES: **BL, GR, W**
AVAILABLE LENGTHS: **17', 18', 20', 21', 25', 30', 250', 510'**
ANSI: **R0E154, R0E155**

- Triple-fin design blocks light and sound from infiltrating a room
- Product designed as hospitality gasketing (see more hospitality products in the Hospitality Products section)
- Seal begins compressing at 3/8"

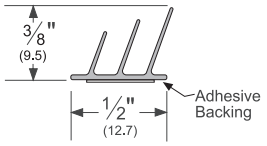

S88_

AVAILABLE FINISHES: **BL, C, D, GR, TAN, W**
AVAILABLE LENGTHS: **17', 18', 20', 21', 25', 30', 204', 510'**
ANSI: **R0E154, R0E155**

- Seal begins compressing at 1/4"; compresses to seal up to a 1/16" gap
- Available with perforations for Behavioral Health applications. Substitute "P" in place of "S" to order this option.

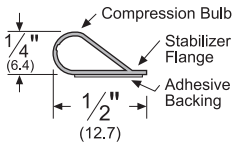

S44_

AVAILABLE FINISHES: **BL, C, GR, W**
AVAILABLE LENGTHS: **17', 18', 20', 21', 25', 30', 204', 510'**
ANSI: **R0E154, R0E155**

- Designed for tighter frames.
- Demonstrates extremely low closing force.
- Seal begins compressing at 5/16"; compresses to seal up to a 1/16" gap
- Available with perforations for Behavioral Health applications. Substitute "P" in place of "S" to order this option.

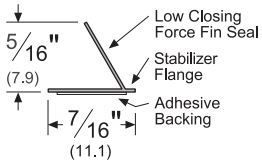

NOTE: Products shown in this section may not be drawn to scale.

AVAILABLE FINISHES FOR PRODUCTS SHOWN ON THIS PAGE
C (Clear Anodized) **D** (Dark Bronze Anodized) **G** (Gold Anodized)

AVAILABLE FINISHES FOR PRODUCTS SHOWN ON THIS PAGE
Adhesive Gasketing Colors: **BL** (Black) **C** (Clear) **D** (Dark Brown) **GR** (Light Gray) **TAN** (Tan) **W** (White)

PEMKO
ASSA ABLOY
Experience a safer and more open world

800-824-3018 | www.pemko.com
Check the web site for the up-to-date catalog

Copyright © 2015-2025, ASSA ABLOY Accessories and Door Controls Group, Inc., an ASSA ABLOY Group company. All rights reserved. Reproduction in whole or in part without the express written permission of ASSA ABLOY Accessories and Door Controls Group, Inc. is prohibited.

ADHESIVE PERIMETER GASKETING *(Cont.)*

For more information on these perimeter gasketing products, please see the Adhesive Gasketing section.

S442_

AVAILABLE FINISHES: **BL, D, W**
AVAILABLE LENGTHS: **17', 18', 20', 21', 25', 30', 510'**
ANSI: **R0E154, R0E155**

- Fits flush into corner
- Seal begins compressing at 5/16"; compresses to seal up to a 1/16" gap

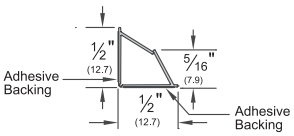

S776_

AVAILABLE FINISHES: **BL**
AVAILABLE LENGTHS: **17', 18', 20', 21', 25', 30'**
ANSI: **R0E154, R0E155**

- Designed for hollow metal and wood meeting stile applications
- Seal begins compressing at 3/8"

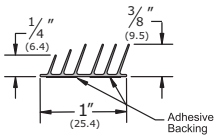

S771x6_

AVAILABLE FINISH: **BL**
AVAILABLE LENGTHS: **7', 8', 10', 17', 18', 20', 21', 25'**
ANSI: **R0E154, R0E155**

- Designed for hollow metal and wood meeting stile applications
- Seal begins compressing at 5/16"

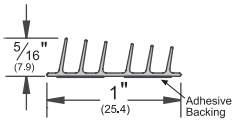

S77_

AVAILABLE FINISHES: **C, BL, D**
AVAILABLE LENGTHS: **17', 18', 20', 21', 25', 30', 204', 510'**
ANSI: **R0E154, R0E155**

- Designed for hollow metal and wood meeting stile applications.
- Seal begins compressing at 5/16"; compresses to seal up to a 1/16" gap

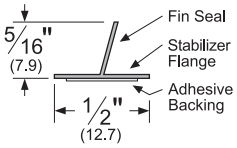

PK33_

AVAILABLE FINISHES: **BL, W**
AVAILABLE LENGTHS: **17', 18', 20', 21', 25', 30', 510'**
ANSI: **R0G154, R0G155**

- Designed for tighter frames.
- Demonstrates extremely low closing force.
- Seal begins compressing at 3/16"; compresses to seal up to a 1/16" gap

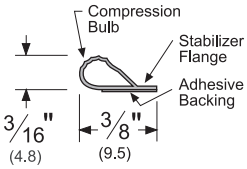

PK55_

AVAILABLE FINISHES: **BL, W**
AVAILABLE LENGTHS: **17', 18', 20', 21', 25', 30', 510'**
ANSI: **R0G154, R0G155**

- Designed for tighter frames.
- Demonstrates extremely low closing force.
- Seal begins compressing at 3/16"; compresses to seal up to a 1/16" gap

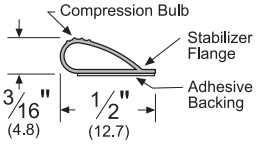

MICROSHIELD® ANTIMICROBIAL ADHESIVE GASKETING

AM88_

AVAILABLE FINISHES: **BL, C, D, W**
AVAILABLE LENGTHS: **17', 18', 20', 21', 25', 30', 510'**
ANSI: **R8E154, R0E155**

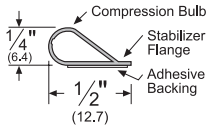

MicroShield™

NOTES FOR ALL ADHESIVE GASKETING:

Storage and shelf life: All adhesive gaskets have a limited shelf life. This product must be installed within 6 months of purchase and must be stored between 50°F and 100°F. For further notes/details, please see Adhesive Gasketing section.

NOTE: Products shown in this section may not be drawn to scale.

AVAILABLE FINISHES FOR PRODUCTS SHOWN ON THIS PAGE
Adhesive Gasketing Colors: **BL** (Black) **C** (Clear) **D** (Dark Brown) **W** (White)

Copyright © 2015-2025, ASSA ABLOY Accessories and Door Controls Group, Inc., an ASSA ABLOY Group company. All rights reserved.
Reproduction in whole or in part without the express written permission of ASSA ABLOY Accessories and Door Controls Group, Inc. is prohibited.

PEMKO
ASSA ABLOY
Experience a safer and more open world

EXCESSIVE GAP PERIMETER SOLUTIONS

XGSHIM Latch Shim

- Meets UL10C standards for 90-minute wood and metal doors
- For use on excessive gaps on the frame behind the strike plate
- Certified in USA & Canada
- Two product numbers, XGSHIM234 and XGSHIM478

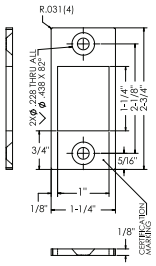

XGSHIM234

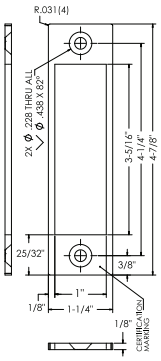

XGSHIM478

XG90KIT

- Brings fire-rated doors with excessive vertical and head gaps back into spec - up to 3/8"
- UL Classified for 90-minutes
- Kit includes both products shown below, XG900 and HSS20XGxS773

XG900

- 16ga galvannealed steel
- Can be screw applied or welded to metal frame. If welded, specify with "no holes" for clean appearance.
- Can be field painted to match the frame

AVAILABLE FINISH: **SP**

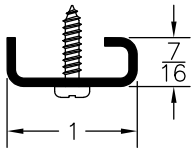

IS47

EZgap™ XG10 SERIES

- Flexible, adhesive-applied solution for excessive gaps up to 5/16"
- Can be used as a full perimeter system or used independently on Latch Edge, Hinge Edge, or Header
- Meets UL10C requirements for singles or pairs of doors with excessive gaps:
  - XG10:
    - Gaps up to 1/4". 60 minutes for wood doors, 90 minutes for hollow metal doors
  - XG10-HM:
    - Gaps up to 5/16". 90 minutes for hollow metal doors
    - Kitted with the HSS90150XG rigid intumescent strip for top door channel

AVAILABLE FINISH: **BL (Black), BR (Brown), GR (Grey), W (White)**

AVAILABLE LENGTHS: **18 ft, 50 ft Rolls**

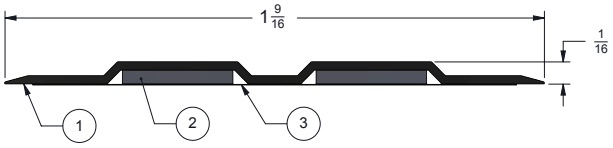

IS47

HSS20XGxS773

- Pressure sensitive adhesive backing
- Seals a gap at the header or along the jambs up to 5/16" for 60-min openings
- Seals a gap along the latch edge up to 3/8" for 90-min openings when used with the XG900SP in the XG90KIT

AVAILABLE FINISH: **BL**

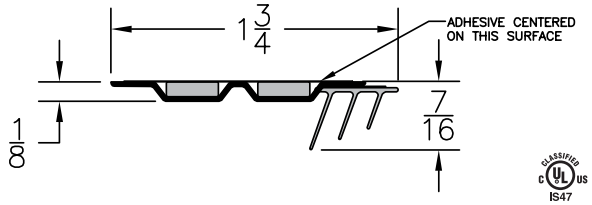

IS47

INTERLOCK WEATHERSTRIP FOR WOOD WINDOWS

Corrugated Rib Strips

- Corrugated rib strips are made from .015" spring bronze (B) or .0172" galvannealed steel (Z)
- _4C is only available in 96" lengths

_4C (1 3/8" width)

AVAILABLE FINISHES: **B, Z**

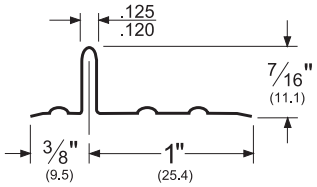

Flat Hooks

- _10 Flat hooks are made from .026" spring bronze (B) or .0172" galvannealed steel (Z)

_10

AVAILABLE FINISHES: **B, Z**

AVAILABLE LENGTHS: **96"**

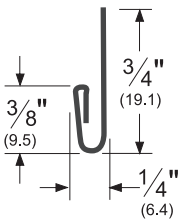

Plain Rib Strips

- Plain rib strips are made from .015" spring bronze (B) or .0172" galvannealed steel (Z)

_2P (1" width)

AVAILABLE FINISHES: **B, Z**

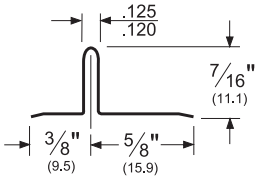

_4P (1 3/8" width)

AVAILABLE FINISHES: **Z**

_2P (1" width) shown at left; also available in _4P (1 3/8" width). _2P and _4P available in 96" lengths only

NOTE: Products shown in this section may not be drawn to scale.

AVAILABLE FINISHES FOR PRODUCTS SHOWN ON THIS PAGE

SP10BE (Satin Bronze Powder) **B** (Bronze) **SPBSP** (Black Suede Powder)
SP (Galvannealed Steel) **SPWSP** (White Suede Powder) **Z** (Galvannealed Steel)

PEMKO
ASSA ABLOY

Experience a safer and more open world

800-824-3018 | www.pemko.com

Check the web site for the up-to-date catalog

Copyright © 2015-2025, ASSA ABLOY Accessories and Door Controls Group, Inc., an ASSA ABLOY Group company. All rights reserved. Reproduction in whole or in part without the express written permission of ASSA ABLOY Accessories and Door Controls Group, Inc. is prohibited.

INTERLOCK WEATHERSTRIP FOR WOOD DOORS

- Fasteners available at additional cost

"L" Metal

- Bronze or zinc-plated wafer head drive screws available for _41M (sold separately)

_41M

AVAILABLE FINISHES: **B, Z**
AVAILABLE LENGTHS: **96"**

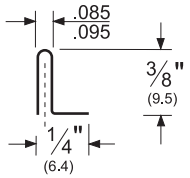

_43

AVAILABLE FINISH: **B**
AVAILABLE LENGTHS: **96"**

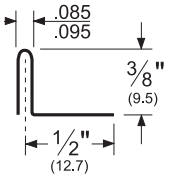

CUSHION/SPRING WEATHERSTRIP FOR WOOD OR METAL DOORS AND WINDOWS

Spring Bronze - Wood Doors/Windows

- Spring bronze weatherstrip fits wood doors and wood casement windows
- Made from .008" hemmed spring bronze/brass (B)
- Nails should be approximately 1½" on center (sold separately)

_70C-100

AVAILABLE FINISH: **B**
AVAILABLE LENGTHS: **100'**

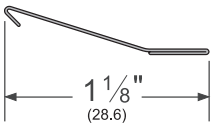

_70E-100

AVAILABLE FINISH: **B**
AVAILABLE LENGTHS: **100'**

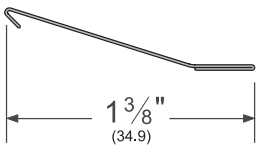

P51B17

P51B17 is 17 feet of _70C
Packaged with nails

CUSHION ("V") - WOOD OR METAL DOORS

- Cushion weatherstrip fits wood or metal doors
- Made from .008" hemmed spring bronze/brass (B)
- Nails should be approximately 3" on center (sold separately)
- Gap coverage is 1⁄8" minimum to 3⁄16" maximum

_73

AVAILABLE FINISH: **B**
AVAILABLE LENGTHS: **96"**

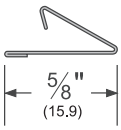

_74

AVAILABLE FINISH: **B**
AVAILABLE LENGTHS: **96"**

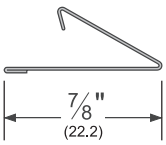

_75

AVAILABLE FINISH: **B**
AVAILABLE LENGTHS: **96"**

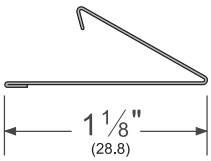

FASTENERS FOR CUSHION, SPRING AND INTERLOCK WEATHERSTRIP

- Fasteners for cushion, spring, and interlock weatherstrip are sold separately unless otherwise specified

NL1678_

AVAILABLE FINISHES: **BL, BP, Z**
For Wood: #16 x 7⁄8" flat head nail



NL1734CPXE_

AVAILABLE FINISHES: **BB, SS**
For Wood: #16 x 3⁄4" flat head nail



NOTE: Copper nails may be substituted for "BB" nails while brass remains unavailabile.

Copyright © 2015-2025, ASSA ABLOY Accessories and Door Controls Group, Inc., an ASSA ABLOY Group company. All rights reserved.
Reproduction in whole or in part without the express written permission of ASSA ABLOY Accessories and Door Controls Group, Inc. is prohibited.

PEMKO
ASSA ABLOY
Experience a safer and more open world

PRIVACY SEALS FOR SLIDING DOORS

PEMKOSFSET1

- Will seal gaps 1/8" to 3/8" for barn door sliding hardware
- Works with any sliding door hardware
- Requires 1/2" frame to keep the gasket from marring the wall

369

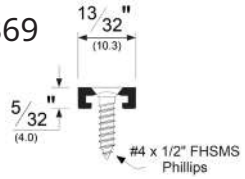

S773

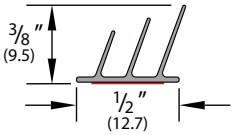

Standard Kit Sizes		
Finish	Product	Color
C	369C S773GR	Clear Anodized Gray
D	369D S773BL	Dark Bronze Anodized Black
PW	369C S773PW	Clear Anodized White

PEMKOSFSET2

- Will seal gaps 1/8" to 3/8" for barn door sliding hardware
- Works with any sliding door hardware
- Requires 1/2" frame to keep the gasket from marring the wall
- Includes a surface mounted bottom seal

369

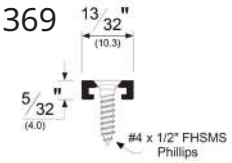

S773

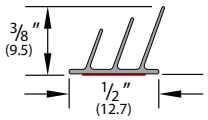

18061_NB

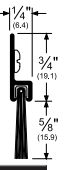

Standard Kit Sizes		
Finish	Product	Color
C	369C S773GR 18061CNB	Clear Anodized Gray Clear Anodized, Gray Brush
D	369D S773BL 18061DNB	Dark Bronze Anodized Black Dark Bronze Anodized, Black Brush
PW	369C S773PW 18061PWNB	Clear Anodized White Painted White

PEMKOSFSET3

950 PY900 394 29394

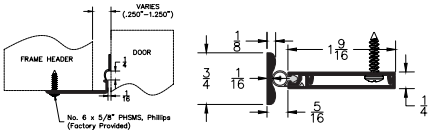

Standard Kit Sizes		
Finish	Product	Color
10BE	29394-10BE-PK 394-10BE 950-10BE PY900BL	Satin Bronze Powder Coat with Black PemkoPrene™ Satin Bronze Powder Coat Satin Bronze Powder Coat Black
C	29394CPK 394C 950C PY900BL	Clear Anodized with Black PemkoPrene™ Clear Anodized Clear Anodized Black
BSP	29394BSPPK 394BSP 950BSP PY900BL	Black Suede Powder Coat with Black PemkoPrene™ Black Suede Powder Coat Black Suede Powder Coat Black
D	29394DPK 394D 950D PY900BL	Dark Bronze Anodized with Black PemkoPrene™ Dark Bronze Anodized Dark Bronze Anodized Black
WSP	29394WSPPK 394WSP 950WSP PY900BL	White Suede Powder Coat with Black PemkoPrene™ White Suede Powder Coat White Suede Powder Coat Black

PEMKOSFSET4

950 PY900 29326_NB 394 29394

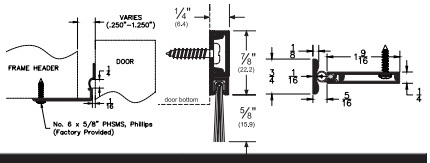

Standard Kit Sizes		
Finish	Product	Color
10BE	29394-10BE-PK 394-10BE 950-10BE PY900BL 29326-10BE-NB	Satin Bronze Powder Coat with Black PemkoPrene™ Satin Bronze Powder Coat Satin Bronze Powder Coat Black Satin Bronze Powder Coat with Black Nylon Brush
C	29394CPK 394C 950C PY900BL 29326CNB	Clear Anodized with Black PemkoPrene™ Clear Anodized Clear Anodized Black Clear Anodized with Gray Nylon Brush
BSP	29394BSPPK 394BSP 950BSP PY900BL 29326BSPNB	Black Suede Powder Coat with Black PemkoPrene™ Black Suede Powder Coat Black Suede Powder Coat Black Black Suede Powder Coat with Black Nylon Brush
D	29394DPK 394D 950D PY900BL 29326DNB	Dark Bronze Anodized with Black PemkoPrene™ Dark Bronze Anodized Dark Bronze Anodized Black Dark Bronze Anodized with Black Nylon Brush
WSP	29394WSPPK 394WSP 950WSP PY900BL 29326WSPNB	White Suede Powder Coat with Black PemkoPrene™ White Suede Powder Coat White Suede Powder Coat Black White Suede Powder Coat with White Nylon Brush

PEMKOSFSET5

950 PY900 394 29394 Planet SN

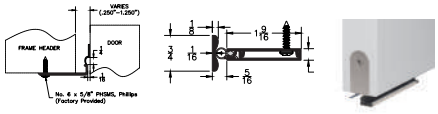

Standard Kit Sizes		
Finish	Product	Color
10BE	29394-10BE-PK 394-10BE 950-10BE PY900BL SN-RD-A	Satin Bronze Powder Coat with Black PemkoPrene™ Satin Bronze Powder Coat Satin Bronze Powder Coat Black Aluminum with Black Silicone
C	29394CPK 394C 950C PY900BL SN-RD-A	Clear Anodized with Black PemkoPrene™ Clear Anodized Clear Anodized Black Aluminum with Black Silicone
BSP	29394BSPPK 394BSP 950BSP PY900BL SN-RD-A	Black Suede Powder Coat with Black PemkoPrene™ Black Suede Powder Coat Black Suede Powder Coat Black Aluminum with Black Silicone
D	29394DPK 394D 950D PY900BL SN-RD-A	Dark Bronze Anodized with Black PemkoPrene™ Dark Bronze Anodized Dark Bronze Anodized Black Aluminum with Black Silicone
WSP	29394WSPPK 394WSP 950WSP PY900BL SN-RD-A	White Suede Powder Coat with Black PemkoPrene™ White Suede Powder Coat White Suede Powder Coat Black Aluminum with Black Silicone

PEMKO
ASSA ABLOY

Experience a safer and more open world

800-824-3018 | www.pemko.com

Check the web site for the up-to-date catalog

Copyright © 2015-2025, ASSA ABLOY Accessories and Door Controls Group, Inc., an ASSA ABLOY Group company. All rights reserved. Reproduction in whole or in part without the express written permission of ASSA ABLOY Accessories and Door Controls Group, Inc. is prohibited.

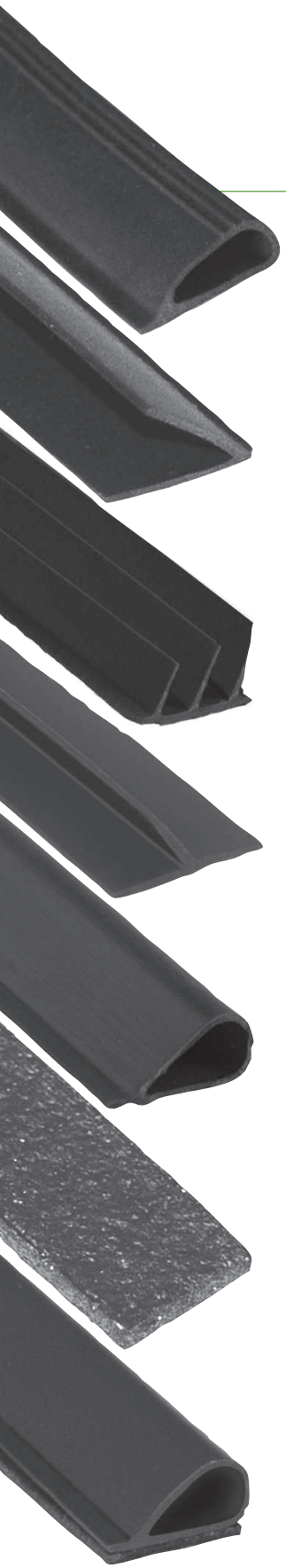

PEMKO ADHESIVE GASKETING

CONTENTS:

SiliconSeal Adhesive-Backed Fire/Smoke Gasketing 188
PemkoPrene® Adhesive-Backed Fire/Smoke Gasketing 189
SiliconSeal Adhesive-Backed Meeting Stile Gasketing 189
MicroShield® Antimicrobial Gasketing 190
Hot Smoke Seal/SiliconSeal Combination Fire/Smoke Sealing 190

INDEX:

PRODUCT	PAGE
AM88	190
HSS2000	190
HSS2000xS44	190
HSS2000xS88	190
HSS7750	190
HSS7850	190
PK33	189
PK55	189
S44	188
S77	188
S88	188
S442	188
S771	189
S771x6	189
S772	189
S773	188
S776	188

800-824-3018 | www.pemko.com

Check the web site for the up-to-date catalog

Copyright © 2015-2025, ASSA ABLOY Accessories and Door Controls Group, Inc., an ASSA ABLOY Group company. All rights reserved.
Reproduction in whole or in part without the express written permission of ASSA ABLOY Accessories and Door Controls Group, Inc. is prohibited.

PEMKO
ASSA ABLOY
Experience a safer and more open world

SILICONSEAL ADHESIVE-BACKED FIRE/SMOKE GASKETING

- SiliconSeal is extruded from high-temperature silicone; effective between -58°F and 450°F
- Self-extinguishing and non-toxic; unaffected by sunlight, ozone, and ultraviolet rays
- Impervious to fungus and mildew; will not deteriorate under normal exposure
- Meets FAR 25.853 Airworthiness Standards for Compartment Interiors

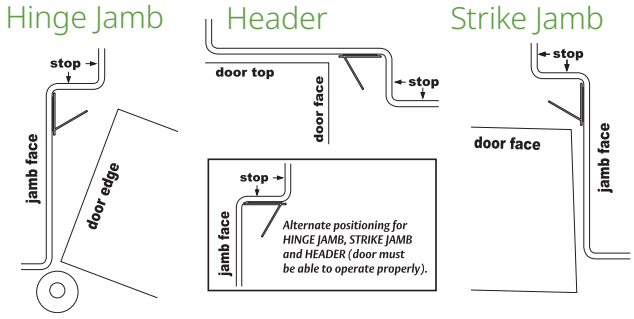

Application is acceptable anywhere along jamb face
**S44 shown, but application detail applies to PK33, PK55, S442, S77, S88, S773, and S776 also.

S44_

AVAILABLE FINISHES: **BL, C, GR, W**
AVAILABLE LENGTHS: **17', 18' 20', 21', 25', 30', 204', 510'**
ANSI: **R0E154, R0E155**

- Designed for tighter frames
- Demonstrates extremely low closing force
- Seal begins compressing at 5/16"; compresses to seal up to a 1/16" gap

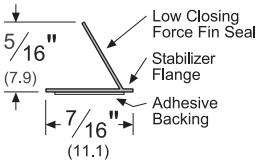

S442_

AVAILABLE FINISHES: **BL, D, W**
AVAILABLE LENGTHS: **17', 18', 20', 21', 25', 30', 510'**
ANSI: **R0E154, R0E155**

- Fits flush into corner
- Seal begins compressing at 5/16"; compresses to seal up to a 1/16" gap in either direction

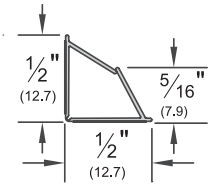

S77_

AVAILABLE FINISHES: **BL, C, D**
AVAILABLE LENGTHS: **17', 18', 20', 21', 25', 30', 204', 500'**
ANSI: **R0E154, R0E155**

- Designed for hollow metal and wood meeting stile applications
- Seal begins compressing at 5/16"; compresses to seal up to a 1/16" gap

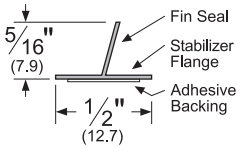

S88_

AVAILABLE FINISHES: **BL, C, D, GR, TAN, W**
AVAILABLE LENGTHS: **17', 18', 20', 21', 25', 30', 204', 510'**
ANSI: **R0E154, R0E155**

- Seal begins compressing at 1/4"; compresses to seal up to a 1/16" gap

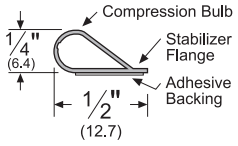

S773_

AVAILABLE FINISHES: **BL, GR, W**
AVAILABLE LENGTHS: **17', 18', 20', 21', 25', 30', 250', 510'**
ANSI: **R0E154, R0E155**

- Triple-fin design effectively blocks light and sound from infiltrating a room
- Seal begins compressing at 3/8"; compresses to seal up to a 3/32" gap

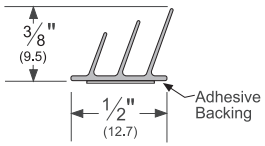

S776_

AVAILABLE FINISHES: **BL**
AVAILABLE LENGTHS: **17', 18', 20', 21', 25', 30'**
ANSI: **R0E154, R0E155**

- Designed for hollow metal and wood meeting stile applications
- Seal begins compressing at 3/8"

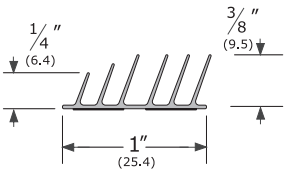

AVAILABLE FINISHES FOR PRODUCTS SHOWN ON THIS PAGE
BL (Black) **C** (Clear) **D** (Dark Brown) **GR** (Light Gray) **TAN** (Tan) **W** (White)

PEMKO
ASSA ABLOY
Experience a safer and more open world

800-824-3018 | www.pemko.com
Check the web site for the up-to-date catalog

Copyright © 2015-2025, ASSA ABLOY Accessories and Door Controls Group, Inc., an ASSA ABLOY Group company. All rights reserved. Reproduction in whole or in part without the express written permission of ASSA ABLOY Accessories and Door Controls Group, Inc. is prohibited.

PEMKOPRENE® ADHESIVE-BACKED FIRE/SMOKE GASKETING

PK33_

AVAILABLE FINISHES: **BL, W**
AVAILABLE LENGTHS: **17', 18', 20', 21', 25', 30', 510'**
ANSI: **R0G154, R0G155**

- Designed for tighter frames
- Demonstrates extremely low closing force
- Seal begins compressing at 3/16"; compresses to seal up to a 1/16" gap

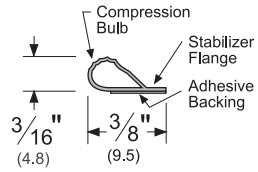

PK55_

AVAILABLE FINISHES: **BL, W**
AVAILABLE LENGTHS: **17', 18', 20', 21', 25', 30', 510'**
ANSI: **R0G154, R0G155**

- Designed for tighter frames
- Demonstrates extremely low closing force
- Seal begins compressing at 3/16"; compresses to seal up to a 1/16" gap

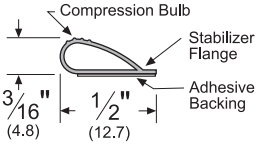

SILICONSEAL ADHESIVE-BACKED MEETING STILE GASKETING

- Excellent resistance to compression set, particularly at elevated temperatures and for extended periods of time
- Outstanding ozone resistance rating
- Smoke tested in accordance with UL1784; meets the requirements of NFPA 105 "Standard for the Installation of Smoke Door Assemblies and Other Opening Protectives"

S771_

AVAILABLE FINISHES: **BL, C, D, W**
AVAILABLE LENGTHS: **7', 8', 9', 10'**
ANSI: **R0E154, R0E155, R0E754, R0E755**

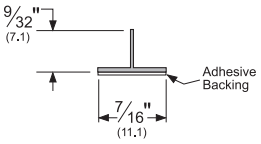

Single Acting Door / Double Acting Door

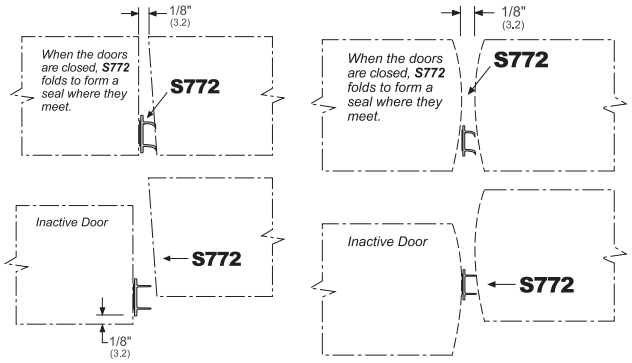

Gasket may be applied to either the active or inactive door leaf.
NOTE: detail is for S771, S771x6, and S772

S771x6_

AVAILABLE FINISHES: **BL**
AVAILABLE LENGTHS: **7', 8', 9', 10'**
ANSI: **R0E154, R0E155, R0E754, R0E755**

- Designed for hollow metal and wood meeting stile applications
- Seal begins compressing at 5/16"

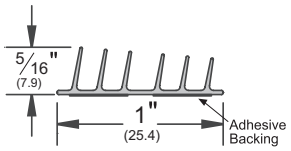

S772_

AVAILABLE FINISHES: **BL, C, W**
AVAILABLE LENGTHS: **7', 8', 9, 10'**
ANSI: **R0E154, R0E155, R0E754, R0E755**

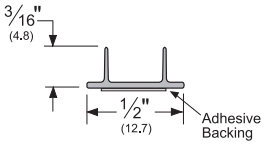

AVAILABLE FINISHES FOR PRODUCTS SHOWN ON THIS PAGE
BL (Black) **C** (Clear) **D** (Dark Brown) **W** (White)

800-824-3018 | www.pemko.com
Check the web site for the up-to-date catalog

Copyright © 2015-2025, ASSA ABLOY Accessories and Door Controls Group, Inc., an ASSA ABLOY Group company. All rights reserved.
Reproduction in whole or in part without the express written permission of ASSA ABLOY Accessories and Door Controls Group, Inc. is prohibited.

PEMKO
ASSA ABLOY
Experience a safer and more open world

MICROSHIELD® ANTIMICROBIAL GASKETING

- Extruded from high-temperature silicone with MicroShield®, a silver-based antimicrobial additive
- Effective between -58°F and 450°F
- Adhesive Backed
- Self-extinguishing and non-toxic
- Unaffected by sunlight, ozone and ultraviolet rays
- Exceeds the requirements for Antimicrobial Test JIS-Z-2801

AM88_

AVAILABLE FINISHES: **BL, C, D, W**
AVAILABLE LENGTHS: **17', 18', 20', 21', 25', 30', 510'**
ANSI: **R0E154, R0E155**

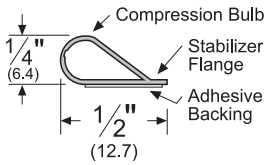

MicroShield®
As part of their promise to provide innovative solutions to their customers, certain ASSA ABLOY Group brands offer the MicroShield® technology, a silver-based antimicrobial additive designed to inhibit the growth of bacteria.

MicroShield® is a registered trademark of ASSA ABLOY Access and Egress Hardware Group, Inc., an ASSA ABLOY Group company.

HOT SMOKE SEAL/SILICONSEAL COMBINATION FIRE/SMOKE SEALING

- Chemically inert, highly stable, expandable graphite strip
- Tested and proven in positive pressure conditions to withstand both hot smoke and hot gasses, resulting in longer integrity of the door assembly
- More economical to use than specially modified doors in "tested assembly only" classifications
- Hot Smoke Seal can be painted to blend in with the finish of a frame
- Will not degrade from carbon dioxide and ozone like many competitive intumescents from other manufacturers
- Unaffected by moisture and will not break down like fiber-based or cellulose-based products

HSS2000xS44_

AVAILABLE FINISHES: **BL, C, GR, W**
AVAILABLE LENGTHS: **18', 20', 21', 24'**
20' lengths can be supplied in 4-0 x 8-0 or 6-0 x 7-0. Specify when ordering
ANSI: **R0U154, R0U155**

- Compresses to seal a gap up to 1/8"

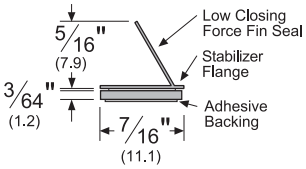

HSS2000xS88_

AVAILABLE FINISHES: **BL, C, D, GR, W**
AVAILABLE LENGTHS: **18', 20', 21', 24'**
20' lengths can be supplied in 4-0 x 8-0 or 6-0 x 7-0. Specify when ordering
ANSI: **R0U154, R0U155**

- Compresses to seal a gap up to 1/8"

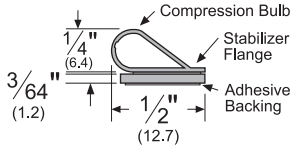

NOTES FOR ALL ADHESIVE GASKETING:

Storage and shelf life: All adhesive gaskets have a limited shelf life. This product must be installed within 6 months of purchase and must be stored between 50ºF and 100ºF. Before installing: Thoroughly clean the frame to remove grease, dust or cleanser build-up (cleansing towelettes are included with product). Painted frame surface must be completely dry. Some hospital environments have wax or anti-bacterial cleanser build-up. As an alternative or substitute cleanser, use isopropyl (rubbing) alcohol. Note: Mineral spirits or other petroleum based cleaning products should NOT be used.

HSS2000_

AVAILABLE FINISHES: Graphite (no finish code)
AVAILABLE LENGTHS: **7', 8', 10', 18', 21', 24'**
ANSI: **R0P154**

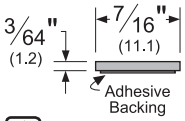

- Adhesive backed (surface applied) intumescent

HSS7750_

AVAILABLE FINISHES: **BL**
AVAILABLE LENGTHS: **36", 48", 84", 96"**

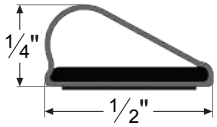

HSS7850_

AVAILABLE FINISHES: **BL**
AVAILABLE LENGTHS: **36", 48", 84", 96"**

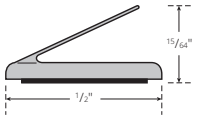

AVAILABLE FINISHES FOR PRODUCTS SHOWN ON THIS PAGE
BL (Black) **C** (Clear) **D** (Dark Brown) **GR** (Light Gray) **W** (White)

Copyright © 2015-2025, ASSA ABLOY Accessories and Door Controls Group, Inc., an ASSA ABLOY Group company. All rights reserved. Reproduction in whole or in part without the express written permission of ASSA ABLOY Accessories and Door Controls Group, Inc. is prohibited.

PEMKO HOSPITALITY PRODUCTS

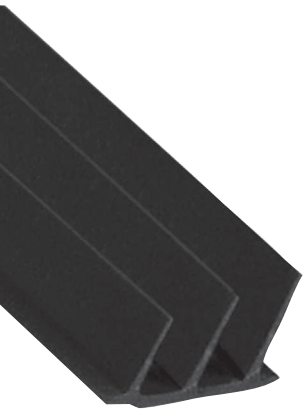

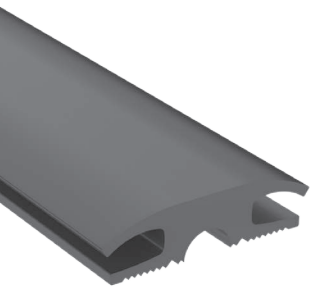

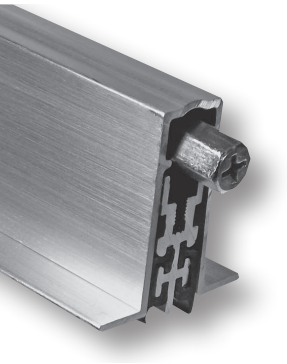

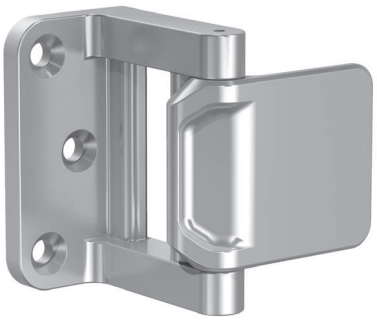

CONTENTS:

Privacy Door Latch, Bracket and Decals....192
SiliconSeal Adhesive Gasketing....193
Automatic Door Bottoms: Acoustic....194
Door Shoes....194
Acoustic Adhesive Corner Pads....194
Automatic Door Bottoms....195
Eco-V™ Thresholds....196
Adjustable-Width Eco-V™ Threshold....197
Stainless Steel Sliding Track Hardware System....198
Cascading Door with Sample Configurations....199
SHS80 System....200
Bypass Track Series....201

INDEX:

PRODUCT	PAGE
411	195
601H	199
1076	199
2113	194
2173	194
2343	194
2802	199
2812	199
3692	194
4131	195
ACP112	194
ADJ232V8	197
ADJ232V14	197
ADJ232x2325V8	197
EV232	196
EV2320	196
EV2322	196
EV2325	196
EV2326	196

PRODUCT	PAGE
H222R1	199
HBP200A	201
PDLAA	192
PDLBRKT	192
PDL-D1	192
PDL-D2	192
S44	193
S88	193
S442	193
S771	193
S771x6	193
S772	193
S773	193
S776	193
SHS80	200
STC411	194
STC4131	194
W60	198

800-824-3018 | www.pemko.com

Check the web site for the up-to-date catalog

Copyright © 2015-2025, ASSA ABLOY Accessories and Door Controls Group, Inc., an ASSA ABLOY Group company. All rights reserved.
Reproduction in whole or in part without the express written permission of ASSA ABLOY Accessories and Door Controls Group, Inc. is prohibited.

PEMKO
ASSA ABLOY

Experience a safer and more open world

PRIVACY DOOR LATCH

- Easy to install, simple to operate
- ADA Compliant
- Enhances room privacy
- UL Classified as a fire door accessory

PDLAA_

AVAILABLE COLORS:

PDLAA26	Polished Chrome
PDLAA26D/15	Brushed Chrome
PDLAA3	Polished Brass
PDLAA4	Brushed Brass
PDLAABSP	Black Suede
PDLAA10BE	Dark Oxidized Satin Bronze, Equivalent

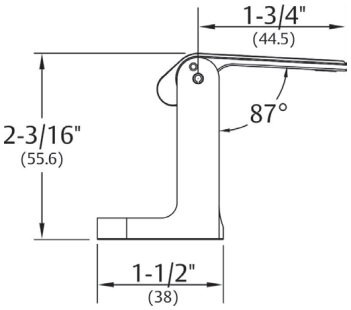

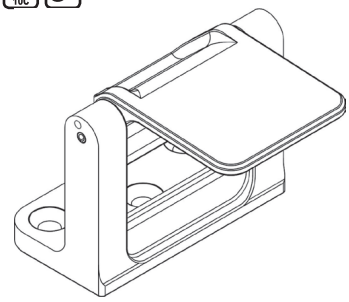



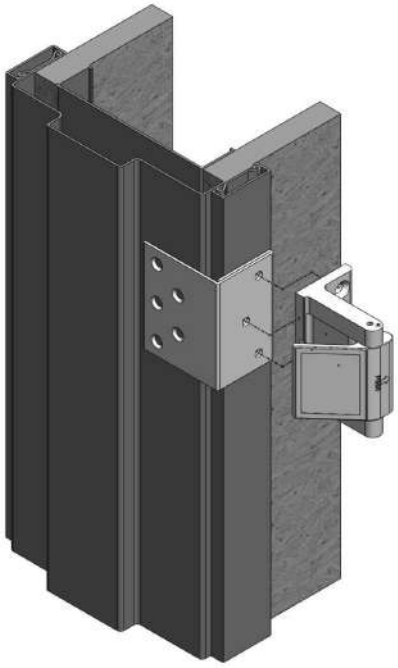

PRIVACY DOOR LATCH BRACKET

- Designed for Timely or Redi-Frame frames with snap on trim
- Bracket allows PDL to be installed in the correct position for proper operation
- Custom powder coat options available.

PDLBRKT_

AVAILABLE COLORS:

Paintable Galvannealed (blank)
Black Suede (BSP)
Satin Bronze (10BE)
White Suede (WSP)

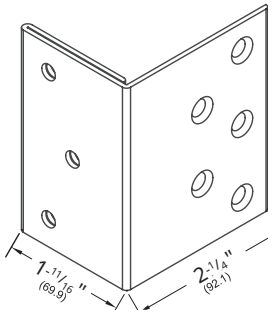

PRIVACY DOOR LATCH DECALS

- Used to cover holes left on door and frame from old style door latch. Per NFPA80 holes must first be filled with like material in order to maintain the fire opening rating
- Made from stable, mar-resistant plastic
- Sub-surface screen printing so verbiage will not be affected by gentle cleaning/dusting

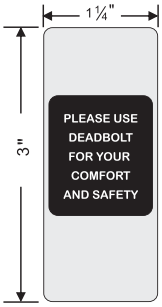

PDL-D1

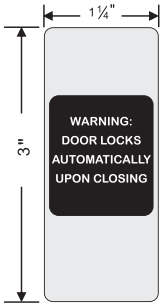

PDL-D2

PEMKO
ASSA ABLOY
Experience a safer and more open world

Copyright © 2015-2025, ASSA ABLOY Accessories and Door Controls Group, Inc., an ASSA ABLOY Group company. All rights reserved. Reproduction in whole or in part without the express written permission of ASSA ABLOY Accessories and Door Controls Group, Inc. is prohibited.

SILICONSEAL ADHESIVE GASKETING

S44_

AVAILABLE FINISHES: **BL, C, D, GR, W**
AVAILABLE LENGTHS: **17', 18', 20', 21', 25', 30', 204', 510'**
ANSI: **R0E154, R0E155**

- Designed for tighter frames
- Demonstrates extremely low closing force
- Seal begins compressing at 5/16"; compresses to seal up to a 1/16" gap

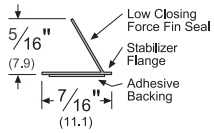

S88_

AVAILABLE FINISHES: **BL, C, D, GR, TAN, W**
AVAILABLE LENGTHS: **17', 18', 20', 21', 25', 30', 204', 510'**
ANSI: **R0E154, R0E155**

- Seal begins compressing at 1/4"; compresses to seal up to a 1/16" gap

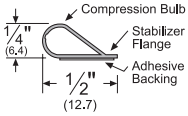

S442_

AVAILABLE FINISHES: **BL, D, W**
AVAILABLE LENGTHS: **17', 18', 20', 21', 25', 30', 510'**
ANSI: **R0E154, R0E155**

- Seal fits flush into corner
- Seal begins compressing at 5/16"; compresses to seal up to a 1/16" gap in either direction

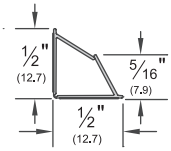

S771_

AVAILABLE FINISHES: **BL, C, D, W**
AVAILABLE LENGTHS: **7', 8', 9', 10'**
ANSI: **R0E154, R0E155, R0E754, R0E755**

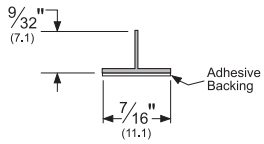

S772_

AVAILABLE FINISHES: **BL, C, D, W**
AVAILABLE LENGTHS: **7', 8', 9', 10'**
ANSI: **R0E154, R0E155, R0E754, R0E755**

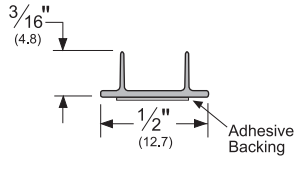

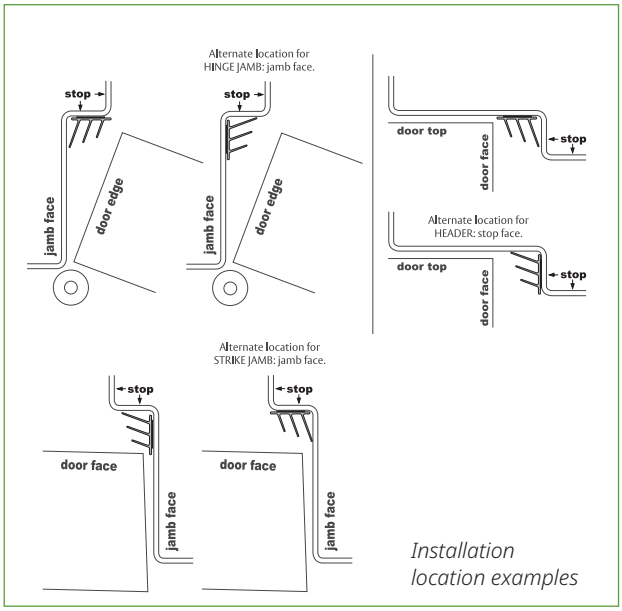

Installation location examples

S773_

AVAILABLE FINISHES: **BL, GR, W**
AVAILABLE LENGTHS: **17', 18', 20', 21', 25', 30', 250', 510'**
ANSI: **R0E154, R0E155**

- Triple-fin design effectively blocks light and sound from infiltrating a room
- Seal begins compressing at 3/8"; compresses to seal up to a 3/32" gap

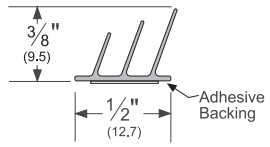

S776_

AVAILABLE FINISHES: **BL**
AVAILABLE LENGTHS: **17', 18', 20', 21', 25', 30'**
ANSI: **R0E154, R0E155**

- Designed for hollow metal and wood meeting stile applications
- Seal begins compressing at 3/8"

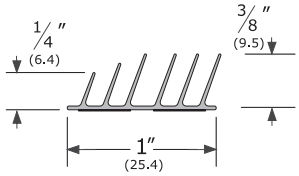

S771x6_

AVAILABLE FINISHES: **BL**
AVAILABLE LENGTHS: **7', 8', 9', 10'**
ANSI: **R0E154, R0E155, R0E754, R0E755**

- Designed for hollow metal and wood meeting stile applications
- Seal begins compressing at 5/16"

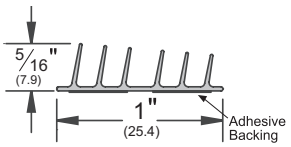

AVAILABLE FINISHES FOR PRODUCTS SHOWN ON THIS PAGE
BL (Black) **C** (Clear) **D** (Dark Brown) **GR** (Light Gray) **TAN** (Tan) **W** (White)

800-824-3018 | www.pemko.com
Check the web site for the up-to-date catalog

Copyright © 2015-2025, ASSA ABLOY Accessories and Door Controls Group, Inc., an ASSA ABLOY Group company. All rights reserved.
Reproduction in whole or in part without the express written permission of ASSA ABLOY Accessories and Door Controls Group, Inc. is prohibited.

PEMKO
ASSA ABLOY
Experience a safer and more open world

AUTOMATIC DOOR BOTTOMS - ACOUSTIC

- Recommended gap under door is 3/8" for optimal acoustic performance; max drop is ¾"
- Internal mechanism allows bar to accommodate slight imperfections in floor materials
- STC411 end plate kit is K435; for doors narrower than 1-¾", specify end plate kit K411
- STC4131 end plate kit is K4133C for Clear Anodized and K4133D for Dark Bronze Anodized
- Non-handed

STC411_PK

AVAILABLE FINISHES: **A**
REPLACEMENT INSERT: **PK4111 (BL)**
ANSI: **R3G324, R3G325**

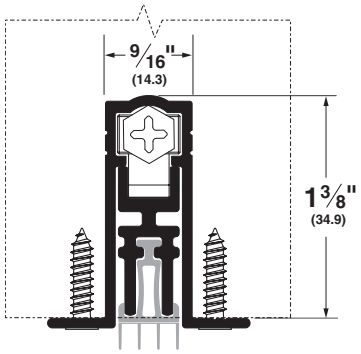

STC4131_PK

AVAILABLE FINISHES: **10BE, BSP, C, D, WSP**
REPLACEMENT INSERT: **PK4111 (BL)**
ANSI: **R3G334, R3G335, R3G344, R3G345**

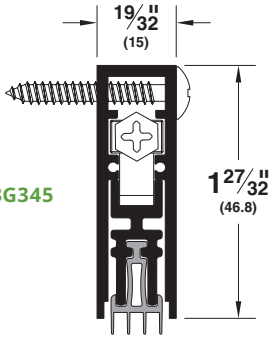

Door Shoes

2173_V

AVAILABLE FINISHES: **A, BSP, D, G, WSP**
AVAILABLE LENGTHS: **36", 48"**
REPLACEMENT INSERT: **EV94 (BL)**
ANSI: **R3D414, R3D415**

Also available with unnotched insert:

2173_V36UN
2173_V48UN

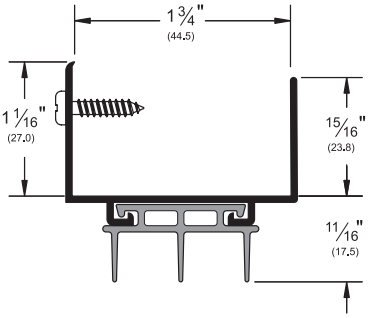

2113_V

AVAILABLE FINISHES: **4E, A, BSP, D, G, WSP**
AVAILABLE LENGTHS: **36", 48"**
REPLACEMENT INSERT: **EV94 (BL)**
ANSI: **R3D414, R3D415**

Also available with unnotched insert:

2113_V36UN
2113_V48UN

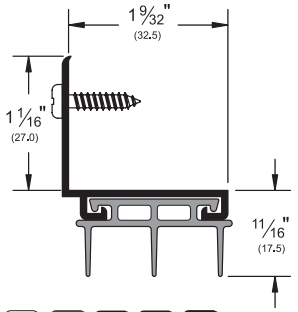

3692_PK773

AVAILABLE FINISH: **A**
AVAILABLE LENGTHS: **36", 48"**
REPLACEMENT INSERT: **PK773 (BL)**
ANSI: **R3G414, R3G415**

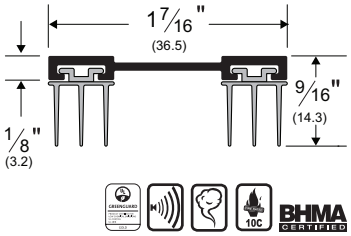

2343_V

AVAILABLE FINISHES: **A, BSP, D, G**
AVAILABLE LENGTHS: **36", 48"**
REPLACEMENT INSERT: **EV94 (BL)**
ANSI: **R3D414, R3D415**

Also available with unnotched insert:

2343_V36UN
2343_V48UN

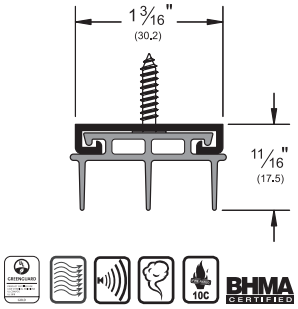

ACOUSTIC ADHESIVE CORNER PADS

- Corner pad with black or white polypropylene pile, with pressure-sensitive adhesive
- Apply to corner of jamb on hinge side to seal against air and light infiltration

ACP112_

AVAILABLE COLORS: **BL, W**

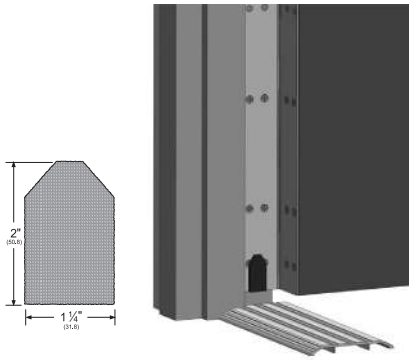

AVAILABLE FINISHES FOR PRODUCTS SHOWN ON THIS PAGE
10BE (Satin Bronze Powder Coated Aluminum) **4E** (Translucent Brass Powder Coat) **A** (Mill Finish Aluminum)
BSP (Black Suede Powder Coated Aluminum) **D** (Dark Bronze Anodized) **G** (Gold Anodized)
WSP (White Suede Powder Coated Aluminum) Corner Pad: **BL** (Black) **W** (White)

Copyright © 2015-2025, ASSA ABLOY Accessories and Door Controls Group, Inc., an ASSA ABLOY Group company. All rights reserved. Reproduction in whole or in part without the express written permission of ASSA ABLOY Accessories and Door Controls Group, Inc. is prohibited.

AUTOMATIC DOOR BOTTOMS

- All Pemko Automatic Door Bottoms, 24" and up, can be manufactured for field alteration.
- Please specify when ordering: Allow 2" for field trimming

411_NBL

AVAILABLE FINISH:
A
REPLACEMENT INSERT:
P14075 (BL, GR)
ANSI:
R3A324, R3A325

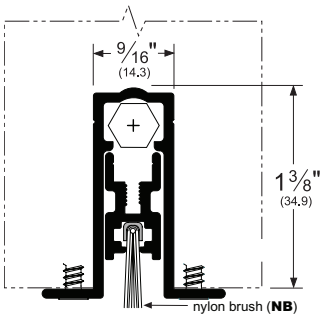

nylon brush (**NB**)

411_RL

AVAILABLE FINISH:
A
REPLACEMENT INSERT:
E7 (BL)
ANSI:
R3G324, R3G325

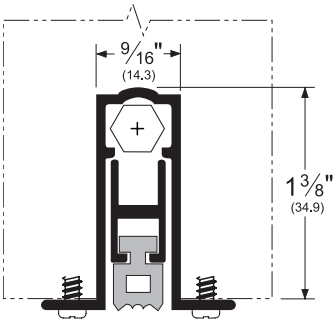

sponge EPDM (**R**)

4131_NBL

AVAILABLE FINISHES:
BSP, C, D, SN
REPLACEMENT INSERT:
P14075 (BL, GR)
ANSI:
R3A334, R3A335, R3A344, R3A345

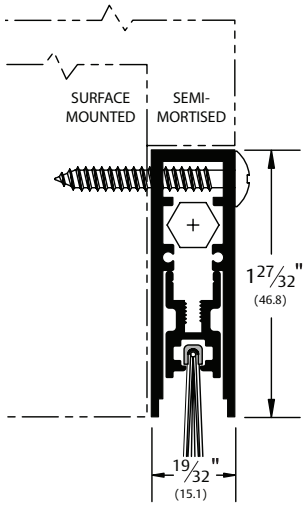

nylon brush (**NB**)

4131_RL

AVAILABLE FINISHES:
BSP, C, D, SN
REPLACEMENT INSERT:
E7 (BL)
ANSI:
R3G334, R3G335, R3G344, R3G345

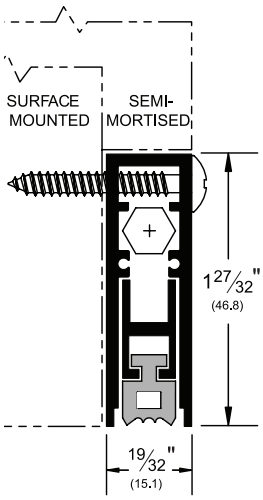

sponge EPDM (**R**)

Alternate Insert For 411

411_PKL

AVAILABLE FINISH:
A
REPLACEMENT INSERT:
PK4132 (BL)
ANSI: **R3G324, R3G325**



PemkoPrene® (**PK**)

411_SL

AVAILABLE FINISH:
A
REPLACEMENT INSERT:
SR6 (BL)
ANSI:
R3E324, R3E325

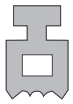

sponge silicone (**S**)

All above products

Alternate Inserts For 4131

4131_PKL

AVAILABLE FINISHES:
BSP, C, D, SN
REPLACEMENT INSERT: **PK4132 (BL)**
ANSI: **R3G334, R3G335, R3G344, R3G345**



PemkoPrene® (**PK**)

4131_SL

AVAILABLE FINISHES:
BSP, C, D, SN
REPLACEMENT INSERT: **SR6 (BL)**
ANSI: **R3E334, R3E335, R3E344, R3E345**

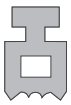

sponge silicone (**S**)

All above products

AVAILABLE FINISHES FOR PRODUCTS SHOWN ON THIS PAGE
10BE (Satin Bronze Powder Coated Aluminum) **A** (Mill Finish Aluminum
BSP (Black Suede Powder Coated Aluminum) **C** (Clear Anodized) **D** (Dark Bronze Anodized)
WSP (White Suede Powder Coated Aluminum) **SN** (Satin Nickel Anodized)

Copyright © 2015-2025, ASSA ABLOY Accessories and Door Controls Group, Inc., an ASSA ABLOY Group company. All rights reserved.
Reproduction in whole or in part without the express written permission of ASSA ABLOY Accessories and Door Controls Group, Inc. is prohibited.

PEMKO
ASSA ABLOY
Experience a safer and more open world

ECO-V™ THRESHOLDS

- Eco-V™ thresholds create an ideal transition where two different pieces of carpet meet, or carpet meets another surface under a door
- Ideal for use in any high-traffic commercial installation, such as hotels and offices
- Eco-V™ thresholds are manufactured from slightly softer material than competitive products. This aids in the cutting and fitting of the threshold and facilitates easier insertion of the carpet into the holding cavities on the carpet side(s) of the threshold
- Eco-V™ thresholds are designed to work in conjunction with Pemko's **2173_V**, **2113_V** and **2343_V** door shoes
- **EV232**, **EV2325**, and **ADJ232V** thresholds meet the criteria outlined in **ADAAG-2010 (Amended)**; **ICC/ANSI A117.1** and **California Building Code, Title 24** for Barrier-Free Entry - ½" max rise above finished floor

EV232_

AVAILABLE COLORS: **BL, D**
AVAILABLE LENGTHS: **36", 48", 73"**
Serves as a transition where two pieces of carpet meet beneath an interior door

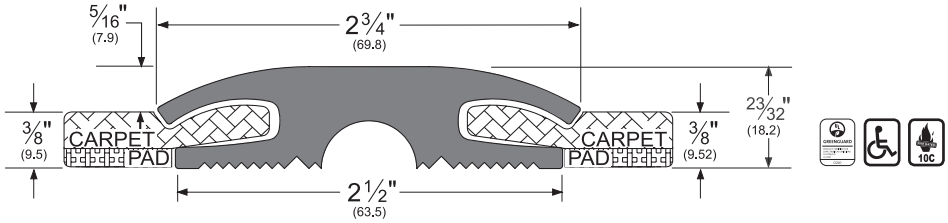

EV2325_

AVAILABLE COLORS: **BL, D**
AVAILABLE LENGTHS: **36", 48", 73"**
Serves as a transition where one piece of carpet meets tile beneath an interior door

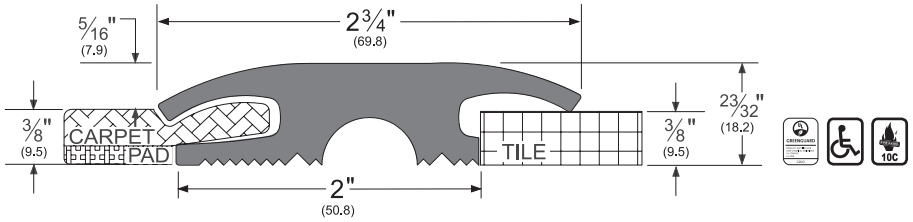

EV2326_

AVAILABLE COLORS: **BL, D**
AVAILABLE LENGTHS: **36", 48", 73"**
Serves as a transition where two pieces of tile meet beneath an interior door

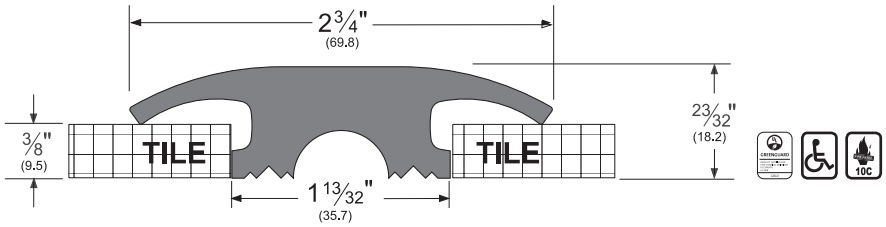

EV2320_

AVAILABLE COLOR: **BL**
AVAILABLE LENGTHS: **36", 48", 73"**
Serves as a transition where carpet meets concrete beneath an interior or exterior door

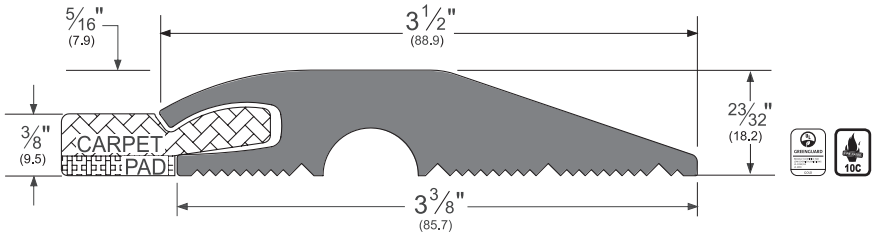

EV2322_

AVAILABLE COLOR: **BL**
AVAILABLE LENGTHS: **36", 48", 73"**
Serves as a transition where carpet meets 1/8" tile beneath an interior door

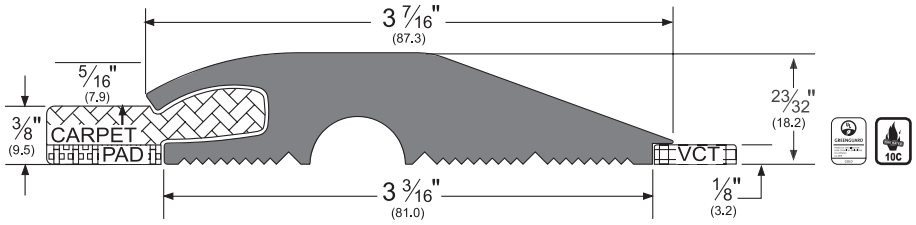

NOTE: Products shown in this section may not be drawn to scale.

AVAILABLE FINISHES FOR PRODUCTS SHOWN ON THIS PAGE
BL (Black) **D** (Dark Brown)

Copyright © 2015-2025, ASSA ABLOY Accessories and Door Controls Group, Inc., an ASSA ABLOY Group company. All rights reserved. Reproduction in whole or in part without the express written permission of ASSA ABLOY Accessories and Door Controls Group, Inc. is prohibited.

ADJUSTABLE-WIDTH ECO-V™ THRESHOLD

- The adjustable-width threshold is designed for installations where the widths of the transition beneath a door may need to change, without completely disassembling and reinstalling the threshold
- The adjustable-width threshold consists of two Eco-V™ end pieces and one Eco-V™ adjustable center section
- Center section (**EV2321** below) can easily be cut to size with a standard razor knife

ADJ232V8_

AVAILABLE COLOR: **BL, D**
AVAILABLE LENGTHS: **36", 48"**

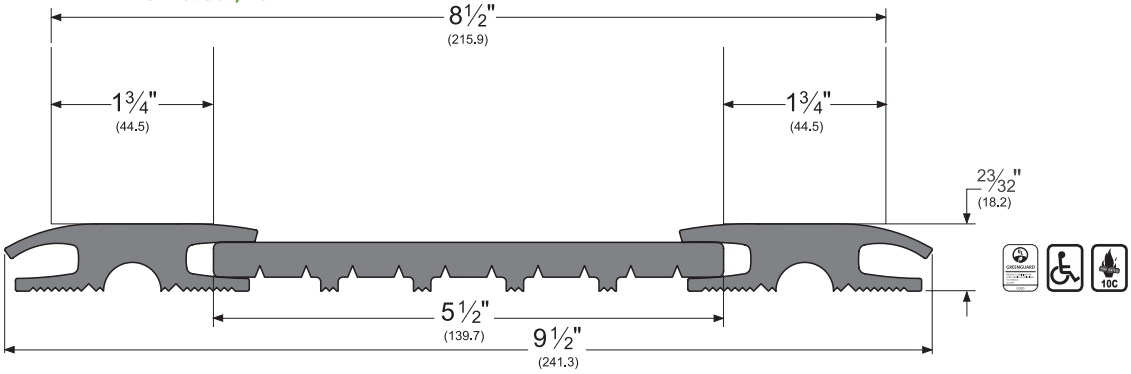

ADJ232V14_

AVAILABLE COLOR: **BL, D**
AVAILABLE LENGTHS: **36", 48"**

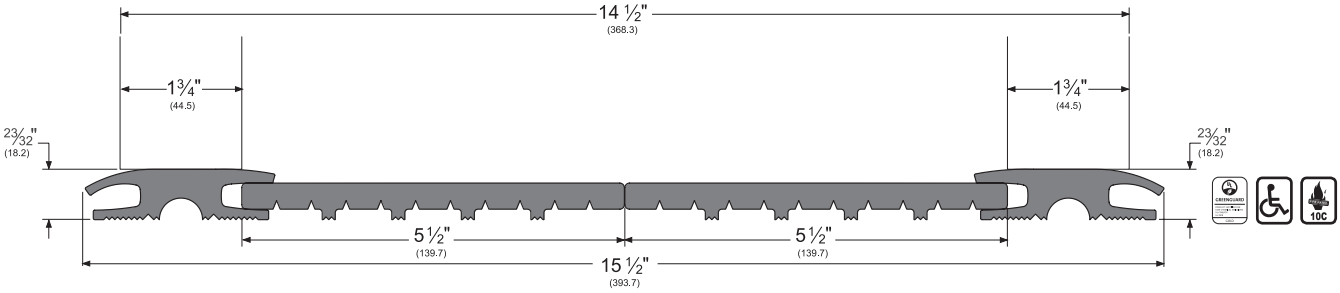

ADJ232x2325V8_

AVAILABLE COLOR: **BL, D**
AVAILABLE LENGTHS: **36", 48"**
For carpet to tile applications; other combinations available

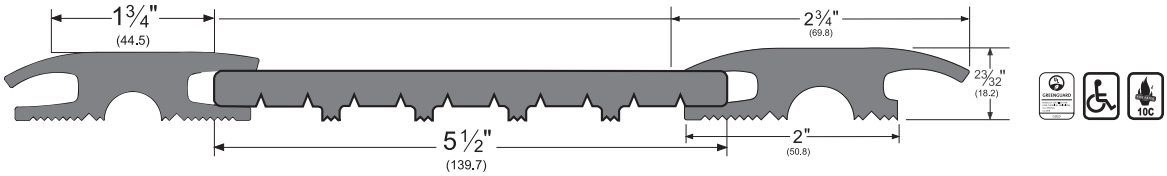

NOTE: Products shown in this section may not be drawn to scale.

AVAILABLE FINISHES FOR PRODUCTS SHOWN ON THIS PAGE
BL (Black) **D** (Dark Brown)

800-824-3018 | www.pemko.com
Check the web site for the up-to-date catalog

Copyright © 2015-2025, ASSA ABLOY Accessories and Door Controls Group, Inc., an ASSA ABLOY Group company. All rights reserved.
Reproduction in whole or in part without the express written permission of ASSA ABLOY Accessories and Door Controls Group, Inc. is prohibited.

PEMKO
ASSA ABLOY
Experience a safer and more open world

STAINLESS STEEL SLIDING TRACK HARDWARE SYSTEM

W60 SERIES FOR WOOD DOORS

For Sliding Panels up to 176 lbs.
Order Form Required



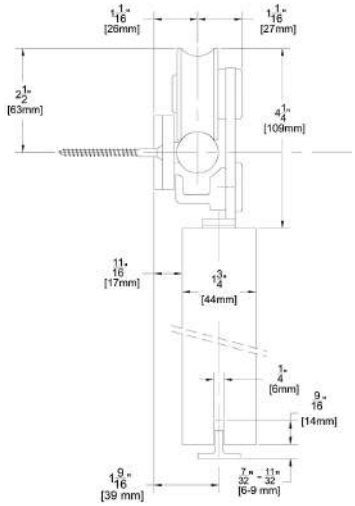

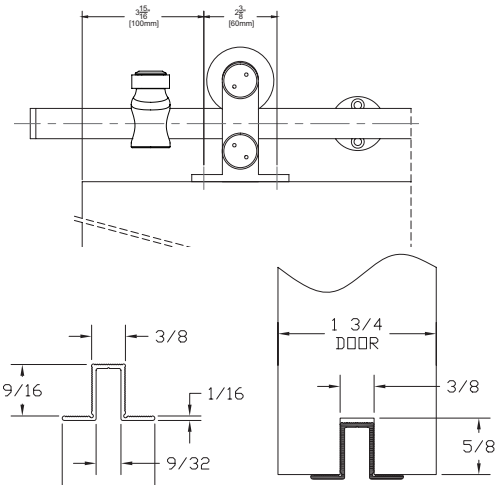

NOTE: Alternate route dimension when using optional EPD3BL

Configurations:
- Single
- Bi-parting

Installations:
- Side Wall Mount (only)

Features:
- Made of 304 stainless steel
- Nylon coated stainless steel wheel for smooth operation
- 176 lb. panel capacity
- 5 year warranty
- Meets ADA push force requirements

Finishes:
- Brushed Stainless Steel (W60)
- Black Powder Coated Stainless Steel (W60D)

W60 Kits Include:

1 ea **BAR/_** Stainless Steel Track
– **BRACKET2** Stainless Steel Wall Brackets
2 ea **62** Stainless Steel Hangers
1 ea **102SS-KIT** Stainless Steel Guide
2 ea **STOP3** Stainless Steel Stops Mounting Hardware
2 ea **SC-TRG** Soft Close Activators

NOTE: If ordering individual parts in the optional Black Powder Coat finish, be sure to include a prefix "D" for Black Powder Coat

Standard Kit Sizes			
PART NUMBER	MATERIAL	TRACK LENGTH	DOOR WIDTH
W60/6	304 Stainless Steel	78 3/4"	36"
W60/8	304 Stainless Steel	98 7/16"	48"
W60D/6	Black Powder Coated 304 Stainless Steel	78 3/4"	36"
W60D/8	Black Powder Coated 304 Stainless Steel	98 7/16"	48"

Custom lengths are available.
Please use the order form available on the Pemko website..

Options:

Hardware Pack (One Door)	**W60_H/PACK**
Mortise Guides	**102N**
Polypropylene Guide Rail	**EPD3BL** For Use With 102N and 102SS-KIT
5/8" Spacer	**BLD-SPACER-58** Pack of 5 5/8" Spacer Recommended for use with 5/8" Gypsum Board When Mounting Track Directly to Gypsum Board
Bottom Guide	**138N-SG1KIT** Surface Mounted Bottom Guide for 1 3/8" door panels

PEMKO
ASSA ABLOY
Experience a safer and more open world

800-824-3018 | www.pemko.com
Check the web site for the up-to-date catalog

Copyright © 2015-2025, ASSA ABLOY Accessories and Door Controls Group, Inc., an ASSA ABLOY Group company. All rights reserved. Reproduction in whole or in part without the express written permission of ASSA ABLOY Accessories and Door Controls Group, Inc. is prohibited.

CASCADING SLIDING DOOR SYSTEM

For Sliding Panels up to 200 lbs. each.



Note: All doors must be of equal width.
Minimum overlap between doors is 2".

Cased Opening



Pocket

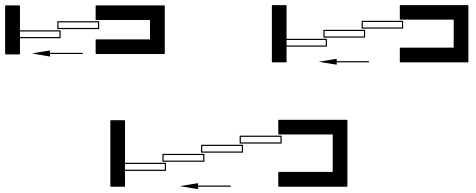

Side Wall Mount

NOTE: Side Wall track Brackets Shown Under Options Must be Ordered Separately for Side Wall Mount Openings



Configurations:

- Bi-part Telescoping
- Single Direction Telescoping

Features:

- Opening and closing of lead door results in the trailing doors to follow because of interlocking hardware at door top edges
- Easy to install with self aligning components on 1 3/4" and 1 3/8" thick doors
- Telescoping panels glide along the track
- Solid steel catches with rubber bumpers ensure durable yet quiet operation
- 200 lb. per door weight capacity
- 5 year warranty

Cascading Kit Includes:

CAS-05 Catches - Mechanical Catch system - 2 Per Door
601H - Track Stops - 2 Per Door
H222R1 - Hangers - 2 Per Door
DBG-02R1 - Door Bottom Guides - 1 Per Door
TELS-23 - End Plates - 2 Per Door
2802C - Single Extrusion - Dual Track
280C - Single Extrusion - Single Track
C1076-TC - Track Connector for CAS200A-4/_ Kits
EPD3-BL - Polypropylene Guide Rails - 1 Per Door
WRENCH14 - 1 Hanger Wrench Hardware Fasteners

Cascading System Kits			
PART NUMBER	TRACK LENGTH	# OF DOORS	INSTALLATION
CAS200A-2/6	6'	2	Pocket Side Wall
CAS200A-2/8	8'	2	
CAS200A-2/10	10'	2	
CAS200A-2/12	12'	2	
CAS200A-3/8	8'	3	Pocket Cased Opening Side Wall
CAS200A-3/10	10'	3	
CAS200A-3/12	12'	3	
CAS200A-3/16	16'	3	
CAS200A-4/8	8'	4	Pocket Cased Opening
CAS200A-4/10	10'	4	
CAS200A-4/12	12'	4	
CAS200A-4/16	16'	4	

For special number of doors and for dark bronze track, please contact Technical Support for more information

Options:

Lock Kit	**SIM150-LOCKKIT** includes lock with edge pull and cup pull
Bolt Kit	**SIM150-BOLTKIT** includes surface bolt, dust-proof strike, cup pull, and edge pull
Fascia	**F134C** Snap-on Fascia
Splice Kit	**C1076-2SPLKIT** for use withBi-Parting systems and 2802C Track **C1076-3SPLKIT** for use with Bi-Parting systems and 2803C Track
Back Stop	**TELS-25** for use with pocket systems when no access to in track stops in pocket
Side Wall Track Bracket	**2812KIT** for use with 2802C Track (1 for every 12" of track) **2813KIT** for use with 2803C Track (1 for every 12" of track)
Side Wall Joining Bracket	**2813-5KIT** for use with Side Wall Bi-Parting systems and **2803C** Track

Copyright © 2015-2025, ASSA ABLOY Accessories and Door Controls Group, Inc., an ASSA ABLOY Group company. All rights reserved.
Reproduction in whole or in part without the express written permission of ASSA ABLOY Accessories and Door Controls Group, Inc. is prohibited.

PEMKO
ASSA ABLOY
Experience a safer and more open world

SHS80 SERIES

For Sliding Panels up to 200 lbs.

Overhead Mount

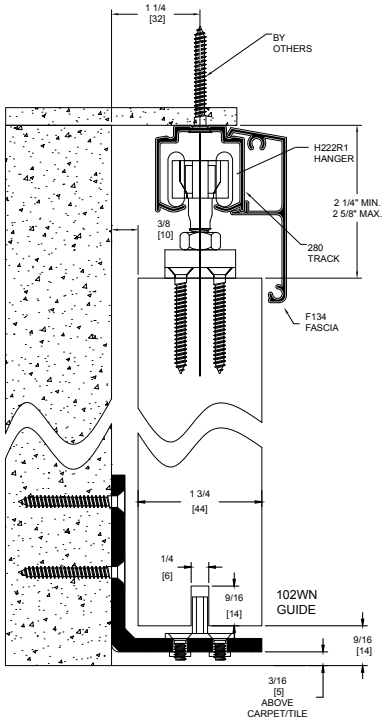

Side Wall Mount

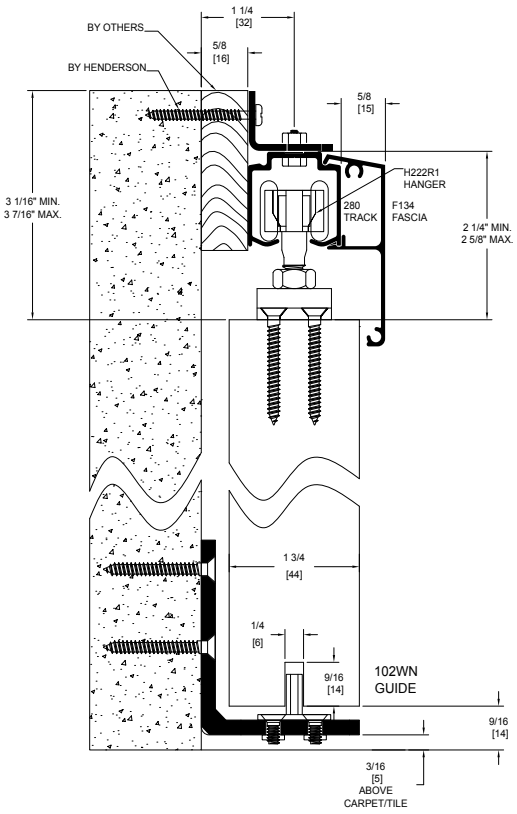

Configurations:

- Single
- Bi-parting

Installations:

- Overhead Mount
- Side Wall Mount

Features:

- Hanger body is made of nickel plated zinc alloy for durability and long life
- Steel ball bearing wheels coated in nylon for smooth operation
- 200 lb. panel capacity
- Optional Soft Close
- 5 year warranty
- Meets ADA push force requirements

SHS80 Kits Include:

1 ea **280C** Clear Anodized Aluminum Track
2 ea **H222R1** - Nickel Plated Zinc Alloy Body
2 ea **601H** Nylon In-Track Clip Stop
1 ea **102WN** White Nylon Mortise Guide on Zinc Plated Steel "L" Metal

Standard Kit Sizes			
PART NUMBER	MATERIAL	TRACK LENGTH	DOOR WIDTH
SHS80/6	Aluminum	72"	36"
SHS80/8	Aluminum	96"	48"

Options:

Fascia	**F134C** clear anodized aluminum fascia **F134D** dark bronze anodized facia
Side Wall Track Brackets	**PC2815** available as 5 pack only, PC2815 pack of 5 281 zinc plated side wall bracket. NOTE: Need one at each end and no more than 2 feet in-between. Fasteners included.
Track	**280D** dark bronze anodized track
End Plate Kit	**K134EP** (use with F134C and 280C only)
Bottom Channel	**94A**
Roller Guide	**106R/94**
Side Wall Mount Extra Hardware Pack	**SHS80/PACK**
Mortise Floor Guide	**102N**
Polypropylene Guide Rail	**EPD3BL** for use with 102N or 102WN
Bottom guide	**138N-SG1KIT** Surface mounted bottom guide for 1 3/8" door panels

Soft Close available. See pages 256-258 for more information.

Alternate Route for EPD3BL

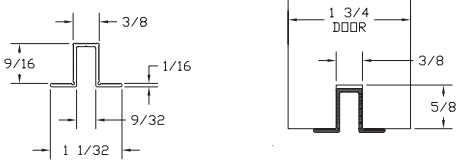

PEMKO
ASSA ABLOY
Experience a safer and more open world

800-824-3018 | www.pemko.com
Check the web site for the up-to-date catalog

Copyright © 2015-2025, ASSA ABLOY Accessories and Door Controls Group, Inc., an ASSA ABLOY Group company. All rights reserved. Reproduction in whole or in part without the express written permission of ASSA ABLOY Accessories and Door Controls Group, Inc. is prohibited.

BYPASS TRACK SERIES

For Bypass Panels up to 200 lbs.

1 3/4" Thick Doors
Side Wall Mount

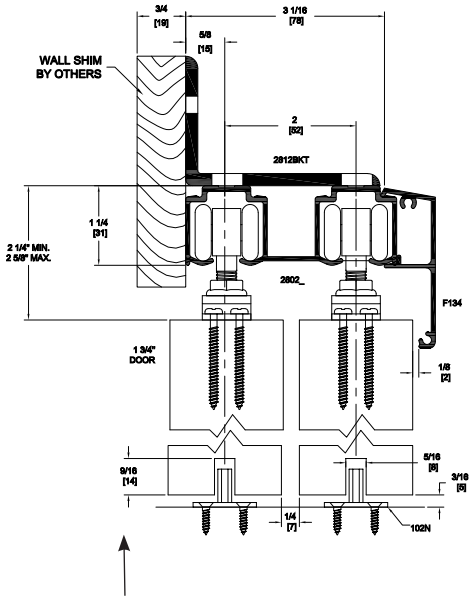

NOTE: Route door 9/16" deep by 1/4" wide to receive 102N Guide.

1 3/4" Thick Doors
Overhead Mount

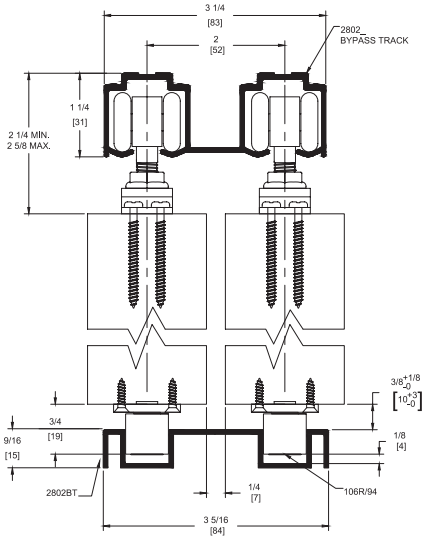

* Side Wall mounting: use one (1) 2812KIT at each end of track and 24" on center

Configurations:

- For Bypass Doors

Features:

- Fits 1 3/8" and 1 3/4" doors
- Hanger body is made of nickel plated zinc alloy for durability and long life
- Steel ball bearing wheels coated in nylon for smooth operation
- 200 lb. panel capacity
- Load capacity 200 lbs. per door panel (2 hangers)
- Extruded aluminum track
- Optional Soft Close
- 5 year warranty
- Meets ADA push force requirements

HBP200A Kits Include:

1 ea **2802C** Clear Anodized Aluminum Track
4 ea **H222R1** Hangers
2 ea **102N** White Nylon Mortise Guide
4 ea **TELS-14KIT** In Track Stops
1 ea Adjusting Wrench and Mounting Hardware

Standard Kit Sizes		
PART NUMBER	TRACK LENGTH	DOOR WIDTH
HBP200A/4	48"	2 @ 26" Min*
HBP200A/5'4	64"	2 @ 34" Min*
HBP200A/6	72"	2 @ 38" Min*
HBP200A/7	84"	2 @ 44" Min*
HBP200A/8	96"	2 @ 50" Min*
HBP200A/10	120"	2 @ 62" Min*
HBP200A/12	144"	2 @ 74" Min*

*Minimum door overlap is 2".

Options:

Hardware Kit	**H200PACK**
Mounting Bracket	**2812KIT**
Track	**2802D** dark bronze anodized track
Track Stop (bumper)	**287R1-KIT**
Bottom Channel	**94A**
Fascia, Snap-On	**F134C** clear anodized aluminum fascia. **F134D** dark bronze anodized aluminum fascia
Roller Guide	**106R/94**
Dual Guide Channel	**2802BT**
Polypropylene Guide Rail	**EPD3BL** for use with 102N
Bottom guide	**138N-SG1KIT** Surface mounted bottom guide for 1 3/8" door panels **138N-SG2KIT** Surface mounted bottom guide for 1 3/8" bypassing door panels

Soft Close available. See pages 256-258 for more information.

AVAILABLE FINISHES FOR PRODUCTS SHOWN ON THIS PAGE
A (Mill Finish Aluminum) C (Clear Anodized) D (Dark Bronze Anodized)

Copyright © 2015-2025, ASSA ABLOY Accessories and Door Controls Group, Inc., an ASSA ABLOY Group company. All rights reserved.
Reproduction in whole or in part without the express written permission of ASSA ABLOY Accessories and Door Controls Group, Inc. is prohibited.

PEMKO
ASSA ABLOY
Experience a safer and more open world

800-824-3018 | www.pemko.com
Check the web site for the up-to-date catalog

Copyright © 2015-2025, ASSA ABLOY Accessories and Door Controls Group, Inc., an ASSA ABLOY Group company. All rights reserved.
Reproduction in whole or in part without the express written permission of ASSA ABLOY Accessories and Door Controls Group, Inc. is prohibited.



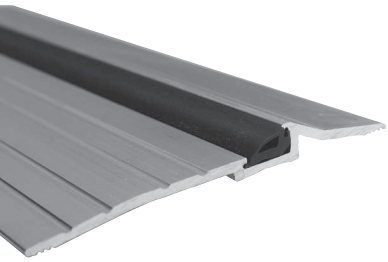

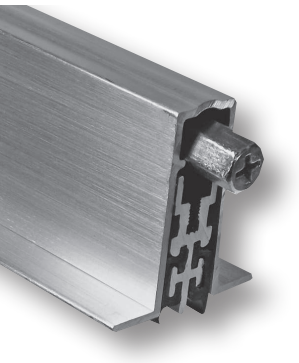

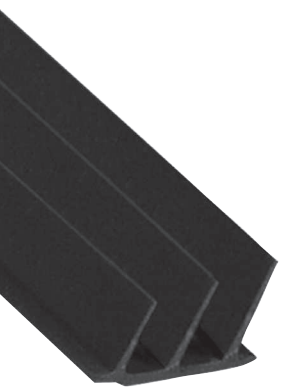

PEMKO ACOUSTIC PRODUCTS

CONTENTS:

Basic Acoustic Information 204
Acoustic Seal Sets 206
Acoustic Thresholds 207
Saddle Thresholds 208
Automatic Door Bottoms - Acoustic 209
Door Shoes 209
Acoustic Adhesive Corner Pads 209
Standard Perimeter Gasketing 210
SiliconSeal Adhesive-Backed Gasketing 210

INDEX:

PRODUCT	PAGE
151	208
154	208
175	208
303	210
312	210
315	210
1547	208
2006STC	207
2008	207
2009	207
2212	209
3692	209
ACP112	209
PEMKOSTCSET	206
S44	210
S442	210
S773	210
STC411	209
STC4131	209

800-824-3018 | www.pemko.com

Check the web site for the up-to-date catalog

Copyright © 2015-2025, ASSA ABLOY Accessories and Door Controls Group, Inc., an ASSA ABLOY Group company. All rights reserved.
Reproduction in whole or in part without the express written permission of ASSA ABLOY Accessories and Door Controls Group, Inc. is prohibited.

PEMKO
ASSA ABLOY

Experience a safer
and more open world

The Impact of Sound

Everyday our ears are met with a barrage of sounds. Sounds can be pleasant, like music or laughter. But they can also be disruptive, like construction or traffic, or even just the people in the cubicle next door. At a certain point sound becomes noise and we look for ways to control it. Sound control is especially important in classrooms, hospitals, hotels and offices, as it impacts our ability to learn, heal, sleep and think.

The U.S. Green Building Council recognizes the importance of acoustical control by including LEED Indoor Environment Quality (IEQ) credits for acoustics.

Description of Sound

Sound can be described as vibrations in the air moving in waves. The rate of sound vibrations measured in cycles per second is called frequency and is measured in hertz (Hz). Sound pressure levels are measured in decibels (dB). For a list of common noises and their related decibel level, see the chart on the right.

Sound Level dB		
0	Threshold of hearing	Inaudible
20	Very rural environment	Extremely quiet
30	Quiet home	Faint
40	Quiet office	Distant sounds audible
50	Background conversation	Moderate
60	Radio/Television in home	Moderate
70	Highway noise	Moderately loud
80	Background factory noise	Loud
90	Noisy factory	Very loud
105	Elevated train	Deafening
120	Bass drum at 3'	Physical pain
130	Jet aircraft at 100'	Physical pain

Basic Acoustics

Sound transmission reduction relies on two main principles:

Sound Absorption - Removing sound energy from within a room by using materials such as acoustic tiles or open cell foam to soak up sound.

Sound Insulation - Preventing the transmission of sound waves by introducing a barrier. Examples include brick, concrete, metal, heavy doors, etc.

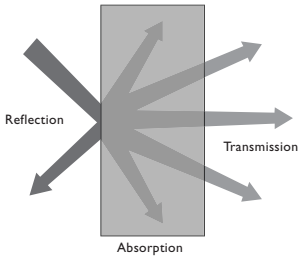

Sound waves will travel the path of least resistance. A high performing door will not compensate for less performing materials in the walls around it.

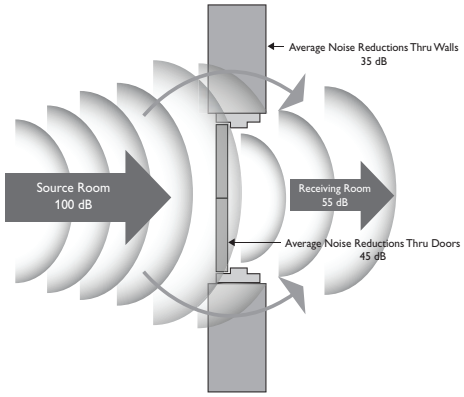

In order to reduce the transmission of sound, materials are added between the source room and the receiving room. The resulting change in decibel level is the sound transmission loss and is given a Sound Transmission Class (STC) rating.

The higher the rating number, the lower the transmission of sound. The STC rating is roughly the decibel reduction a partition can provide. For instance, if a 100 dB noise is reduced to 55 dB, that product roughly has a STC 45 rating.

Copyright © 2015-2025, ASSA ABLOY Accessories and Door Controls Group, Inc., an ASSA ABLOY Group company. All rights reserved. Reproduction in whole or in part without the express written permission of ASSA ABLOY Accessories and Door Controls Group, Inc. is prohibited.

Sound Flanking

Flanking is the leakage of airborne sound around a door opening through any available gap. Flanking between the door leaf and the surrounding frame is reduced by the use of seals.

Optimum sound attenuation performance is likely achieved using a four sided frame with a sill made to the same detail as the head and the seals set in a single plane. If a full four sided frame is not an option, then alternative threshold sealing options should be made such as automatic door bottoms, door shoes and/or thresholds.

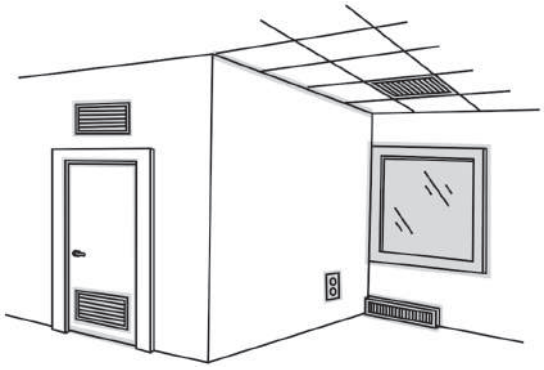

Active STC Rating	*Level Of Speech Heard*
STC-30	Loud speech understood
STC-35	Loud speech heard but not understood
STC-40	Loud speech audible as a murmur
STC-45	Some loud speech barely audible
STC-48	Hearing strained to hear loud speech
STC-50	Loud speech not audible

Look for Pemko products with this symbol:

Tested To: ASTM E 90-2009

Products indicated by this symbol have been acoustically tested in accordance with ASTM E90 - Standard Test Method for Laboratory Measurement of Airborne Sound Transmission Loss of Building Partitions and Elements.

STC Ratings

Acoustic Door Testing is done on “sealed-in-place” (fully caulked) doors for door STC ratings, as well as on assemblies (with gasketing and door bottoms) for operable STC ratings. Operable STC ratings are always equal to or lower than the sealed-in-place ratings. The best performance rating on the operable test is a 'zero drop' in the assembly's STC rating. For example, a door with a STC 45 rating can only achieve an operable STC of 45 at its very best; it can never achieve a STC 50.

Also, since sound waves travel the path of least resistance, a high performing door will not compensate for elements like improperly installed seals around doors, the lack of a threshold under the door, a non-insulated frame, louvered doors, or poor seals at the wall/ceiling/floor/mullion connections.

When STC ratings are determined, normal human speech and hearing are used. In most cases the level of reduction does not totally eliminate but rather muffles the sound to an unintelligible level. The chart shown on the left compares the level of speech that would be heard through a door system with the indicated operable STC rating.

Need STC Rated Doors?

Pemko Acoustic Seal Sets are an important part of an overall acoustic solution. ASSA ABLOY Group brands can provide the other elements of the solution including STC Rated Doors, STC Rated Frames and complete STC Rated Assemblies.

For more information please see:

CECO DOORS: www.cecodoor.com
CURRIES: www.curries.com

Copyright © 2015-2025, ASSA ABLOY Accessories and Door Controls Group, Inc., an ASSA ABLOY Group company. All rights reserved.
Reproduction in whole or in part without the express written permission of ASSA ABLOY Accessories and Door Controls Group, Inc. is prohibited.

Acoustic Seal Sets

Pemko acoustic components are available in their appropriate sets. These product combinations are lab tested and have known decibel drops when used with sound-rated doors. Each kit includes gasketing, a door bottom or threshold, and a complete set of installation instructions. Installation instructions show the proper installation location for each component for optimal performance. STC Sets 1-5 are for single doors only. STC Set 6 is for a pair of doors.

HOW TO:

1. Locate the Sealed-In-Place (inoperable) rating for your door.
2. Determine the maximum allowable drop for your opening (i.e. -1 db). Note: the numbers are represented as negative numbers as they will decrease your inoperable rating by the number shown (i.e. 45 using a –1 kit will decrease the inoperable rating from 45 to an operable of 44)
3. Find a number in the column below your door's inoperable rating that will keep your opening in the allowable range.
4. Select a kit (or one of the kits given if Alternate Kits are shown), place it on your Purchase Order and add your opening size in inches (i.e. a 3/0 x 7/0 opening will be ordered as a 3684).

Item Number	Sealed-In-Place Door STC Rating				
	58 to 54	53 to 49	48 to 46	45 to 43	<42
PEMKOSTCSET-1A Alternate Kits: 1B, 1C, 1D, 1E		-2	-2	-1	0
PEMKOSTCSET-2C	-3	-2	-2	-1	0
PEMKOSTCSET-2D Alternate Kits: 2A, 2B	-3	-2	-1	-1	0
PEMKOSTCSET-2E	-2	-2	-1	-1	0
PEMKOSTCSET-3A		-2	-1	0	0
PEMKOSTCSET-3D		-2	-1	0	0
PEMKOSTCSET-3E	-2	-2	-1	0	0
PEMKOSTCSET-3B				0	0
PEMKOSTCSET-4A	-3	-2	-1	0	0
PEMKOSTCSET-4B	-3	-2	-1	0	0
PEMKOSTCSET-4D	-3	-2	-1	0	0
PEMKOSTCSET-4E	-2	-2	-1	0	0
PEMKOSTCSET-5C	-3	-2	-2	-1	0
PEMKOSTCSET-5D Alternate Kits: 5A, 5B	-3	-2	-1	-1	0
PEMKOSTCSET-6A		-2			
PEMKOSTCSET-6B		-2			
PEMKOSTCSET-6C		-8			
PEMKOSTCSET-6D		-8			

NOTE: A seal set cannot increase the sealed-in-place rating; a zero drop is the best performance any seal set can provide.

Item Number	Gasketing	Door Bottom	Threshold	Corner Pad
PEMKOSTCSET-1A	S773BL (Single Row) and S44BL (Single Row)	STC411APK		ACP112BL
PEMKOSTCSET-1B	S44BL (Two Rows)	STC411APK		ACP112BL
PEMKOSTCSET-1C	S442BL (Single Row) and S44BL (Single Row)	STC411APK		ACP112BL
PEMKOSTCSET-1D	303AS and S44BL (Single Row)	STC411APK		ACP112BL
PEMKOSTCSET-1E	312CR and S44BL (Single Row)	STC411APK		ACP112BL
PEMKOSTCSET-2A	S773BL (Single Row) and S44BL (Single Row)		2008APK	
PEMKOSTCSET-2B	S44BL (Two Rows)		2008APK	
PEMKOSTCSET-2C	S442BL (Single Row) and S44BL (Single Row)		2008APK	
PEMKOSTCSET-2D	303AS and S44BL (Single Row)		2008APK	
PEMKOSTCSET-2E	312CR and S44BL (Single Row)		2008APK	
PEMKOSTCSET-3A	S773BL (Single Row) and S44BL (Single Row)	3692APK773BL		
PEMKOSTCSET-3B	S44BL (Two Rows)	3692APK773BL		
PEMKOSTCSET-3D	303AS and S44BL (Single Row)	3692APK773BL		
PEMKOSTCSET-3E	312CR and S44BL (Single Row)	3692APK773BL		
PEMKOSTCSET-4A	S773BL (Single Row) and S44BL (Single Row)		2009APK	
PEMKOSTCSET-4B	S44BL (Two Rows)		2009APK	
PEMKOSTCSET-4D	303AS and S44BL (Single Row)		2009APK	
PEMKOSTCSET-4E	312CR and S44BL (Single Row)		2009APK	
PEMKOSTCSET-5A	S773BL (Single Row) and S44BL (Single Row)		2006STC	
PEMKOSTCSET-5B	S44BL (Two Rows)		2006STC	
PEMKOSTCSET-5C	S442BL (Single Row) and S44BL (Single Row)		2006STC	
PEMKOSTCSET-5D	303AS and S44BL (Single Row)		2006STC	
PEMKOSTCSET-5E	312CR and S44BL (Single Row)		2006STC	

NOTE: 2008PK and 2009PK have acoustic equivalency.

Copyright © 2015-2025, ASSA ABLOY Accessories and Door Controls Group, Inc., an ASSA ABLOY Group company. All rights reserved. Reproduction in whole or in part without the express written permission of ASSA ABLOY Accessories and Door Controls Group, Inc. is prohibited.

Item Number	Perimeter Adhesive Gasketing	Perimeter Mechanical Gasketing	Threshold	Meeting Edge
PEMKOSTCSET-6A	S442BL (Single Row) and S44BL (Single Row)	303S	2009APK	S77BL Adhesive Gasketing (Two Rows) and 375R Astragal
PEMKOSTCSET-6B	S44BL (Two Rows)	303S	2009APK	S77BL Adhesive Gasketing (Two Rows) and 375R Astragal
PEMKOSTCSET-6C	S442BL (Single Row) and S44BL (Single Row)		2009APK	S77BL Adhesive Gasketing (Two Rows) and 375R Astragal
PEMKOSTCSET-6D	S44BL (Two Rows)		2009APK	S77BL Adhesive Gasketing (Two Rows) and 375R Astragal

ACOUSTIC THRESHOLDS

- Pemko Acoustic Thresholds are designed to aid with a door's STC rating
- Thresholds will not improve a doors "sealed in-place" STC rating
- Visit www.assaabloydooraccessories.us, for more Acoustic products and additional information

2006STC_

AVAILABLE FINISHES: **10BE, A, BSP, D, WSP**
REPLACEMENT INSERT: **T5 (BL)**
ANSI (aluminum): **J36100, J36130**

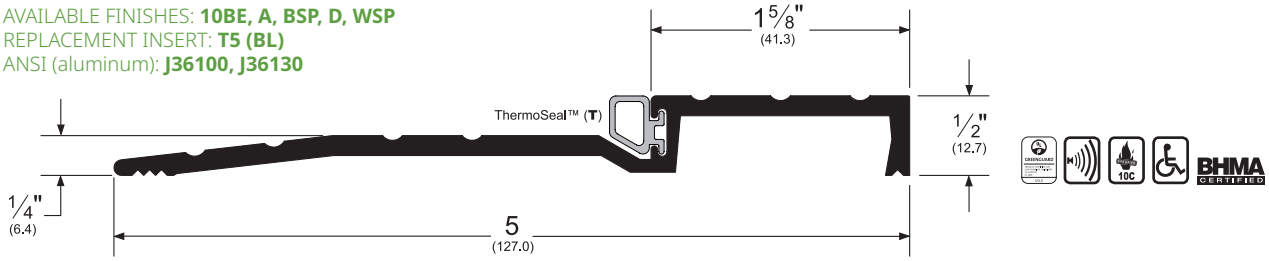

2008_PK

AVAILABLE FINISHES: **10BE, A, BSP, D, WSP**
REPLACEMENT INSERT: **PK381 (BL)**
ANSI (aluminum): **J36100, J36130**

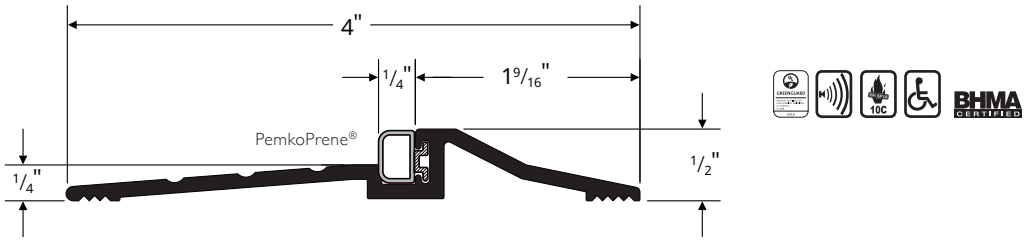

2009_PK

AVAILABLE FINISHES: **10BE, A, BSP, D, WSP**
REPLACEMENT INSERT: **PK20 (BL)**
ANSI: **J36100, J36130**
Allow 3/8" door clearance

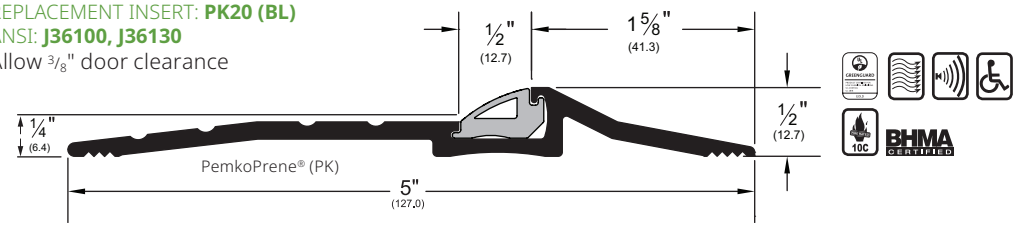

AVAILABLE FINISHES FOR PRODUCTS SHOWN ON THIS PAGE
10BE (Satin Bronze Powder Coated Aluminum) **A** (Mill Finish Aluminum)
BSP (Black Suede Powder Coated Aluminum) **D** (Dark Bronze Anodized)
WSP (White Suede Powder Coated Aluminum)

Copyright © 2015-2025, ASSA ABLOY Accessories and Door Controls Group, Inc., an ASSA ABLOY Group company. All rights reserved.
Reproduction in whole or in part without the express written permission of ASSA ABLOY Accessories and Door Controls Group, Inc. is prohibited.

PEMKO
ASSA ABLOY
Experience a safer and more open world

SADDLE THRESHOLDS

- Use these with Pemko Automatic Door Bottoms to create a smooth, even sealing surface

151_

AVAILABLE FINISHES: **10BE , A, BSP, D, WSP**
ANSI (aluminum): **J32300, J32330**

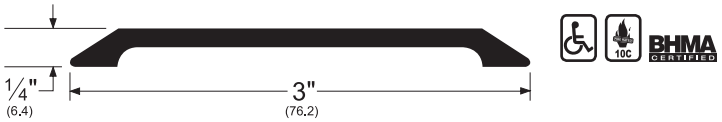

175_

AVAILABLE FINISHES: **10BE, 4E, A, B, BSP, D, WSP**
ANSI (aluminum): **J32300, J32330**
ANSI (brass): **J12300, J12330**

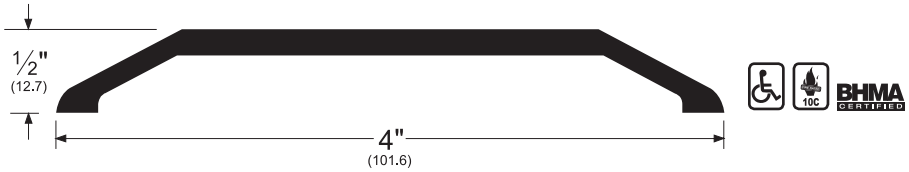

154_

AVAILABLE FINISHES: **10BE , A, BSP, D, WSP**
ANSI (aluminum): **J32300, J32330**

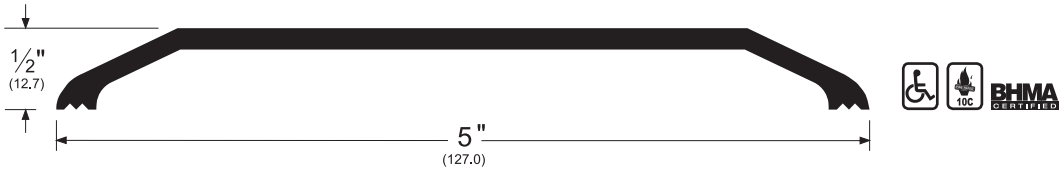

1547_

AVAILABLE FINISHES: **10BE, 4E, A, BSP, WSP**
ANSI (aluminum): **J32300, J32330**



AVAILABLE FINISHES FOR PRODUCTS SHOWN ON THIS PAGE
10BE (Satin Bronze Powder Coated Aluminum) **4E** (Translucent Brass Powder Coat) **A** (Mill Finish Aluminum)
B (Mill Finish [Brass] Bronze) **BSP** (Black Suede Powder Coated Aluminum) **D** (Dark Bronze Anodized)
WSP (White Suede Powder Coated Aluminum)

Copyright © 2015-2025, ASSA ABLOY Accessories and Door Controls Group, Inc., an ASSA ABLOY Group company. All rights reserved. Reproduction in whole or in part without the express written permission of ASSA ABLOY Accessories and Door Controls Group, Inc. is prohibited.

AUTOMATIC DOOR BOTTOMS - ACOUSTIC

- Non-handed
- Recommended gap under door is ½" for optimal acoustic performance max drop is ¾"
- Internal mechanism allows bar to accommodate slight imperfections in floor materials
- STC411 end plate kit is K435; for doors narrower than 1-¾", specify end plate kit K411
- STC4131 end plate kit is K4133C for Clear Anodized and K4133D for Dark Bronze Anodized

STC411_PK

AVAILABLE FINISHES: **A**
REPLACEMENT INSERT: **PK4111 (BL)**
ANSI: **R3G324, R3G325**

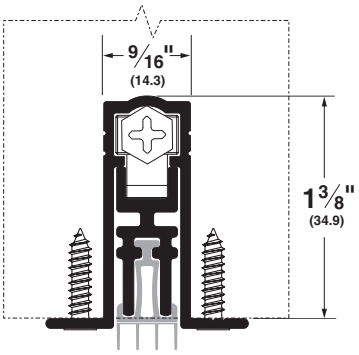

STC4131_PK

AVAILABLE FINISHES: **10BE, BSP, C, D, WSP**
REPLACEMENT INSERT: **PK4111 (BL)**
ANSI: **R3G334, R3G335, R3G344, R3G345**

NOTE:
STC411_PK Automatic Door Bottom is now included in PEMKOSTCSET-1 (A through E). Please see Acoustic Products section for more information.

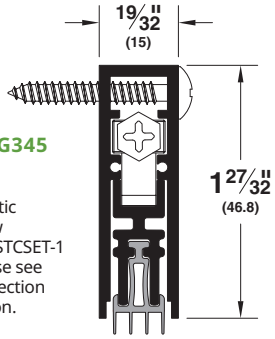

DOOR SHOES

- Slotted holes for easy adjustment
- Provided with stainless steel fasteners
- Use a flat saddle to create a positive sealing surface that ensures maximum acoustic performance

3692_PK773

AVAILABLE FINISH: **A**
AVAILABLE LENGTHS: **36", 48"**
REPLACEMENT INSERT: **PK773 (BL)**
ANSI: **R3G414, R3G415**

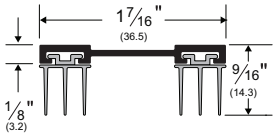

2212_PK773

AVAILABLE FINISHES: **10BE, A, BSP, WSP**
REPLACEMENT INSERT: **PK773 (BL)**
ANSI: **R3G416**

- Combination door shoe and kick plate
- Excellent Acoustic performance

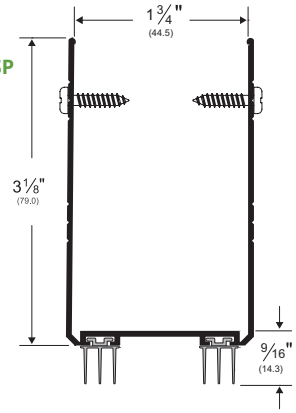

ACOUSTIC ADHESIVE CORNER PADS

- Corner pad with black or white polypropylene pile, with pressure-sensitive adhesive
- Apply to corner of jamb on hinge side to seal against air and light infiltration

ACP112_

AVAILABLE COLORS: **BL, W**

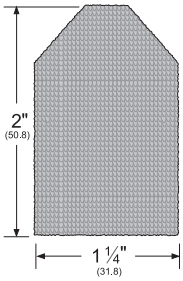

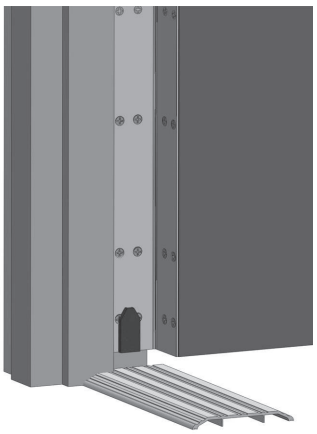

NOTE: Products shown in this section may not be drawn to scale.

AVAILABLE FINISHES FOR PRODUCTS SHOWN ON THIS PAGE
10BE (Satin Bronze Powder Coated Aluminum) **A** (Mill Finish Aluminum)
BSP (Black Suede Powder Coated Aluminum) **C** (Clear Anodized)
D (Dark Bronze Anodized) **WSP** (White Suede Powder Coated Aluminum)
Corner Pads: **BL** (Black) **W** (White)

800-824-3018 | www.pemko.com
Check the web site for the up-to-date catalog

Copyright © 2015-2025, ASSA ABLOY Accessories and Door Controls Group, Inc., an ASSA ABLOY Group company. All rights reserved.
Reproduction in whole or in part without the express written permission of ASSA ABLOY Accessories and Door Controls Group, Inc. is prohibited.

PEMKO
ASSA ABLOY
Experience a safer and more open world

STANDARD PERIMETER GASKETING

- Rigid jamb weatherstrip shown mounted on openings with 1/16" gaps; however, each weatherstrip can seal gaps up to the depth of its seal. Seal depth provided on each illustration (example: the **303** has a 1/4" seal; therefore, it can seal up to a 1/4" gap)
- Punched on 6" centers with slotted holes for adjustment
- Model 303 is available with self-adhesive two-sided tape (TST) and tek screws (3 slotted holes per part) for easy installation. To obtain this option, add "TST" to the end of the part when ordering (example: **303AVTST**)
- Pemko is continually commissioning tests for acoustic assemblies. More profiles may be tested from this category. Please contact Customer Service if the options here don't suit your application.

303_S

AVAILABLE FINISHES:
10BE, 4E, A, BSP, C, D, G, SN, WSP
REPLACEMENT INSERT: **S3 (BL, W)**
ANSI: **R3E164, R3E165**

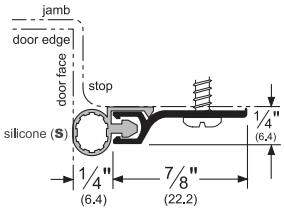

312_R

AVAILABLE FINISHES: **10BE, BSP, C, D, WSP**
REPLACEMENT INSERT: **ER9BL (BL)**
ANSI (alum): **R3G164, R3G165**

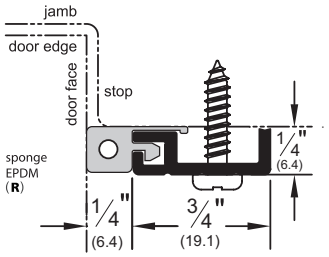

315_R

AVAILABLE FINISHES: **10BE, BSP, C, D, WSP**
REPLACEMENT INSERT: **ER9BL (BL)**
ANSI (alum): **R3G164, R3G165**

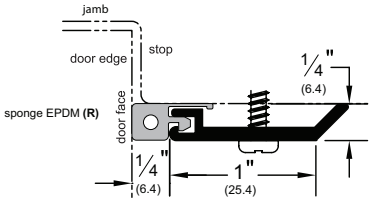

SILICONSEAL ADHESIVE-BACKED GASKETING

- SiliconSeal is extruded from high-temperature silicone; effective between -58°F and 450°F
- Self-extinguishing and non-toxic; unaffected by sunlight, ozone, and ultraviolet rays
- Impervious to fungus and mildew; will not deteriorate under normal exposure
- Meets FAR 25.853 Airworthiness Standards for Compartment Interiors

S44_

AVAILABLE FINISHES: **BL, C, D, GR, W**
AVAILABLE LENGTHS: **17', 18', 20', 21', 25', 30', 204', 510'**
ANSI: **R0E154, R0E155**

- Designed for tighter frames
- Demonstrates extremely low closing force
- Seal begins compressing at 5/16"; compresses to seal up to a 1/16" gap

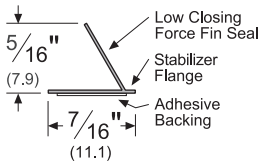

S442_

AVAILABLE FINISHES: **BL, D, W**
AVAILABLE LENGTHS: **17', 18', 20', 21', 25', 30', 510'**
ANSI: **R0E154, R0E155**

- Fits flush into corner
- Seal begins compressing at 5/16"; compresses to seal up to a 1/16" gap in either direction

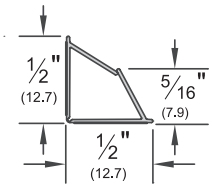

S773_

AVAILABLE FINISHES: **BL, GR, W**
AVAILABLE LENGTHS: **17', 18', 20', 21', 25', 30', 250', 510'**
ANSI: **R0E154, R0E155**

- Triple-fin design effectively blocks light and sound from infiltrating a room
- Seal begins compressing at 3/8"; compresses to seal up to a 3/32" gap

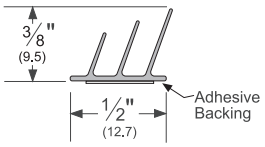

NOTE: Products shown in this section may not be drawn to scale.

AVAILABLE FINISHES FOR PRODUCTS SHOWN ON THIS PAGE
Metal: **10BE** (Satin Bronze Powder Coated Aluminum) **4E** (Translucent Brass Powder Coat) **A** (Mill Finish Aluminum) **BSP** (Black Suede Powder Coated Aluminum) **D** (Dark Bronze Anodized) **G** (Gold Anodized) **PW** (Painted White) **SN** (Satin Nickel Anodized) **WSP** (White Suede Powder Coated Aluminum)
SiliconSeal: **BL** (Black) **C** (Clear) **D** (Dark) **GR** (Gray) **W** (White)

PEMKO
ASSA ABLOY
Experience a safer and more open world

800-824-3018 | www.pemko.com
Check the web site for the up-to-date catalog

Copyright © 2015-2025, ASSA ABLOY Accessories and Door Controls Group, Inc., an ASSA ABLOY Group company. All rights reserved. Reproduction in whole or in part without the express written permission of ASSA ABLOY Accessories and Door Controls Group, Inc. is prohibited.



CONTENTS:

H180A Series 212
SHS80 Series 213
Sliding 200 Series 214
Side Wall Track (SWT) System 215
Bypass Track Series 218
SIM200A Series 219
LP200 Series 220
LBP75A 221
Sirocco Series 222
H440A-OH Series 223
H440A-SW Series 224
TBS200A-OH Series 225
TBS200A-SW Series 226
TBS250A-OH Series 227
TBS250A-SW Series 228
H600S-OH Series 229
H600S-SW Series 230
H800S-OH Series 231
H800S-SW Series 232
H1100A-OH Series 233
H1100A-SW Series 234
Pocket Frame Kit 235
Folding 100 Series 236
Pacer Interior End Fold Series 237
Hide Slide 238
Flexirol Interior End Fold Series 239
Stainless Steel Sliding Track Hardware System for Wood Doors 240
Builders Series Flat Track for Wood Doors 248
Designer Series Flat Track for Wood Doors 251
SIM 150 - 2 Door 253
SIM 150 - 3 Door 254
Cascading Door with Sample Configurations 255
PemkoMatic™ Sliding Door Operator 256
PemPass™ 257
Options and Accessories 259
Privacy Seal Sets 259
Soft Close Systems 260

INDEX:

PRODUCT	PAGE
1A/301	230
1A/301/EC	229
1A/550	234
1AX/301	230
1AX/301	232
1B	224
1BX	224
3A/301	229
3A/301	231
3AX/301	229
3AX/301	231
21/550/P	239
21BO/4	237
21B/P	237
21N/94	237
21R/94	239
57A/N	231
57A/S	229
57B	223
62	240
72	243
82	244
94A	212
94A	236
94A	259
102N	212
102N	240
102N	248
102N	259
102WA	212
102WA	214
102WA	215
102WA	219
102WA	224
102WA	232
102WA	259
102WN	212
102WN	219
102WN	224
102WN	230
102WN	232
102WN	248
106HF/94	236
106N/94	259
106R/94	212
106R/94	259
111	245
280	212
280	219
280	236
280A-SWT	215
280_-SWF	215
280_SWTKIT	215
281	213
281	219
281	236
281	259
282HD	236
283	236
287R1-KIT	212
287R1-KIT	214
287R1-KIT	215
287R1-KIT	218
289B	236
289T	236
301	229
403/2	237
550A	233
550A	239
556/21	239
556/57	233
600A	223
600A	237
601H	213
601H	219
601H	255
601H	259
601P	223
1075C	212
1076	255
2802	218
2802	255
2802BT	218
2802BT	259
2803	253
2812	218
2812	255
2812	259
BAR	240
BRACKET2	240
EPD3	212
EPD3	218
EPD3	240
EPD3	248
EPD3	253
F134	212
F134	218
F134	253
F134	259
F160C	223
F160ECP	223
F200C	224
F200ECP	224
FIF2/275A	239
H180A	212
H200	214
H200	215
H200PACK	214
H200PACK	215
H200PACK	259
H222R1	212
H222R1	235
H222R1	255
H440A-OH	223
H440A-SW	224
H600S-OH	229
H600S-SW	230
H800S-OH	231
H800S-SW	232
H1100A-OH	233
H1100A-SW	234
HBP200A	218
HF2/100	236
HF2/100PACK	236
HF2/100PACK	259
HF4/100	236
HH3/301	229
Hide Slide	238
K28_-SWEP	215
K134EP	213
K134EP	219
K134EP	259
K1077_-SWEP	212
LBP75A	221
LH100	220
LP200A	220
PemPass™	257
PF2x6KIT	235
PF28200A	235
PFAS	235
PFAS88	235
PFAS100	235
PFBG-4	235
PFBG-4	259
PFBG-8	235
PFBG-8	259
PFBS	235
PFBS	259
PFCDKIT	235
PFFC-8	235
PFHB-1	235
PFHB-2	235
PFHS	235
PFKIT-4	235
PFKIT-8	235
PF-SP6-KIT	235
PIF2/165A	237
PIF4/165A	237
PSLIDE	256
SDL	258
SHS80	213
SIM100	219
SIM150	253
SIM150-BOLTKIT	253
SIM150-LOCKKIT	253
SIM200A	219
SIRLH /SIRRH	222
SOFT CLOSE	260
STOP3	240
STOP3	242
STOP3	247
TBS200A-OH.	225
TBS200A-SW	226
TBS250A-OH.	227
TBS250A-SW	228
W60 to W100	240

800-824-3018 | www.pemko.com

Check the web site for the up-to-date catalog

Copyright © 2015-2025, ASSA ABLOY Accessories and Door Controls Group, Inc., an ASSA ABLOY Group company. All rights reserved.
Reproduction in whole or in part without the express written permission of ASSA ABLOY Accessories and Door Controls Group, Inc. is prohibited.

PEMKO
ASSA ABLOY

Experience a safer and more open world

H180A SERIES

For Sliding Panels up to 200 lbs.

Overhead Mount

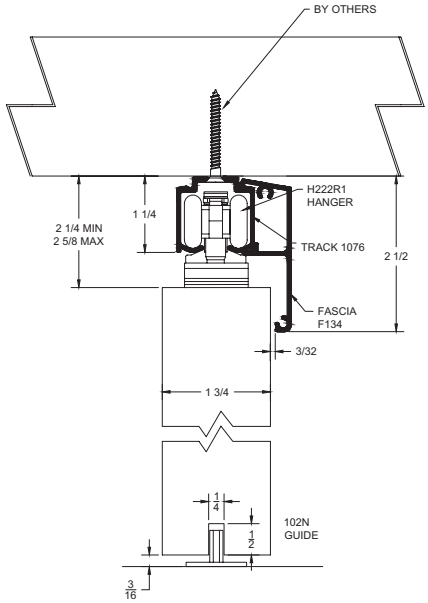

Side Wall Mount

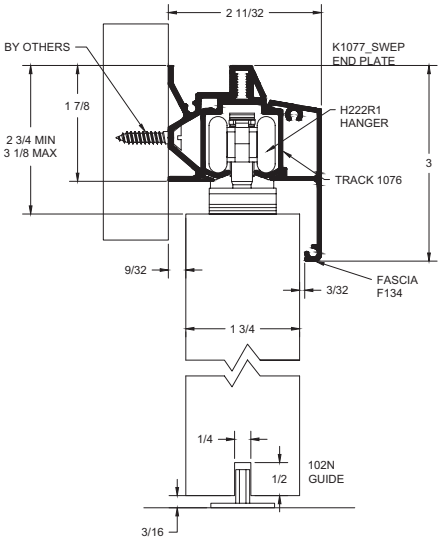

Configurations:

- Single
- Bi-parting

Installations:

- Overhead Mount
- Side Wall Mount

Features:

- Hanger body is made of nickel plated zinc alloy for durability and long life
- Steel ball bearing wheels coated in nylon for smooth operation
- 200 lb. panel capacity
- Optional side wall bracket reduces the amount of wall space needed to mount the track
- 5 year warranty
- Meets ADA push force requirements
- ANSI/BHMA A156.14 Grade 1 Certifiied

H180A Kits Include:

1 ea **280C** Clear Anodized Aluminum Track
2 ea **H222R1** - Nickel Plated Zinc Alloy Body Zinc Alloy Wheels Coated in Nylon
2 ea **287R1-KIT** Rubber Bumper In-Track Stop
1 ea **102N** White Nylon Mortise Guide

Standard Kit Sizes			
PART NUMBER	MATERIAL	TRACK LENGTH	DOOR WIDTH
H180A/6	Aluminum	72"	36"
H180A/8	Aluminum	96"	48"

Options:

Fascia	**F134C** clear anodized aluminum fascia **F134D** dark bronze anodized fascia
Side Wall Track Bracket	**1075C** clear anodized aluminum bracket- order same length as track
Track	**280D** dark bronze anodized track
End Plate Kit	**K1077C-SWEP** (use with F134C fascia and 1075C side wall bracket only)
Bottom Channel	**94A**
Roller Guide	**106R/94**
Side Wall Mount Mortise Guides	**102WN** (nylon) and **102WA** (steel)
Polypropylene Guide Rail	**EPD3BL** for use with 102N or 102WN
Bottom guide	**138N-SG1KIT** Surface mounted bottom guide for 1 3/8" door panels

Soft Close available. See pages 256-258 for more information.

Alternate Route for EPD3BL

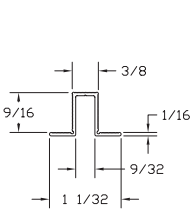

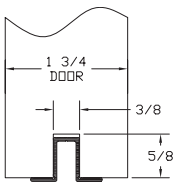

PEMKO
ASSA ABLOY
Experience a safer and more open world

Copyright © 2015-2025, ASSA ABLOY Accessories and Door Controls Group, Inc., an ASSA ABLOY Group company. All rights reserved. Reproduction in whole or in part without the express written permission of ASSA ABLOY Accessories and Door Controls Group, Inc. is prohibited.

SHS80 SERIES

For Sliding Panels up to 200 lbs.

Overhead Mount

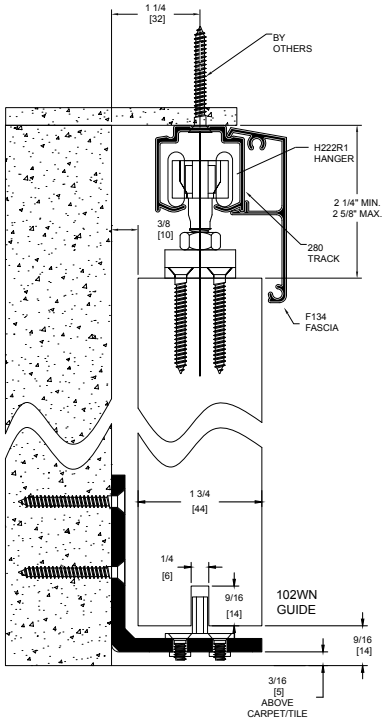

Side Wall Mount

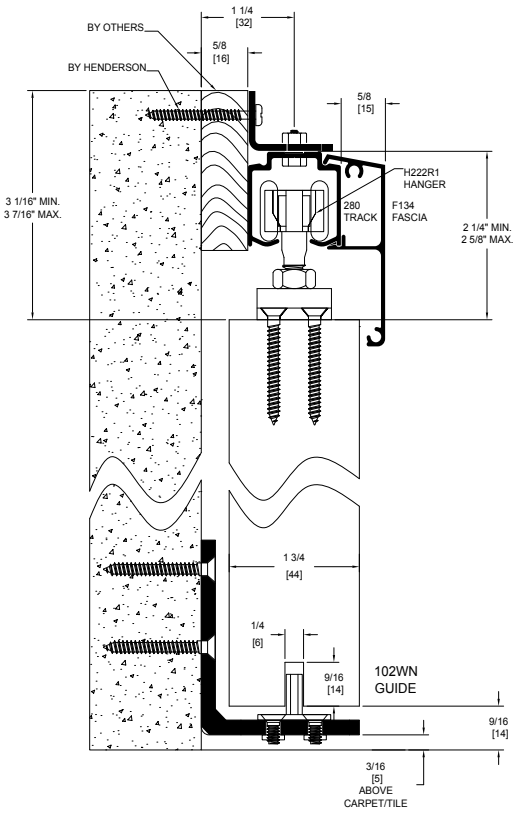

Configurations:

- Single
- Bi-parting

Installations:

- Overhead Mount
- Side Wall Mount

Features:

- Hanger body is made of nickel plated zinc alloy for durability and long life
- Steel ball bearing wheels coated in nylon for smooth operation
- 200 lb. panel capacity
- Optional Soft Close
- 5 year warranty
- Meets ADA push force requirements

SHS80 Kits Include:

1 ea **280C** Clear Anodized Aluminum Track
2 ea **H222R1** - Nickel Plated Zinc Alloy Body
2 ea **601H** Nylon In-Track Clip Stop
1 ea **102WN** White Nylon Mortise Guide on Zinc Plated Steel "L" Metal

Standard Kit Sizes			
PART NUMBER	MATERIAL	TRACK LENGTH	DOOR WIDTH
SHS80/6	Aluminum	72"	36"
SHS80/8	Aluminum	96"	48"

Options:

Fascia	**F134C** clear anodized aluminum fascia **F134D** dark bronze anodized facia
Side Wall Track Brackets	**PC2815** available as 5 pack only, PC2815 pack of 5 281 zinc plated side wall bracket. NOTE: Need one at each end and no more than 2 feet in-between. Fasteners included.
Track	**280D** dark bronze anodized track
End Plate Kit	**K134EP** (use with F134C and 280C only)
Bottom Channel	**94A**
Roller Guide	**106R/94**
Side Wall Mount Extra Hardware Pack	**SHS80/PACK**
Mortise Floor Guide	**102N**
Polypropylene Guide Rail	**EPD3BL** for use with 102N or 102WN
Bottom guide	**138N-SG1KIT** Surface mounted bottom guide for 1 3/8" door panels

Soft Close available. See pages 256-258 for more information.

Alternate Route for EPD3BL

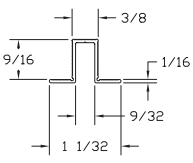

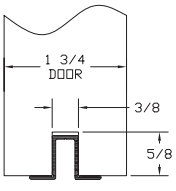

Copyright © 2015-2025, ASSA ABLOY Accessories and Door Controls Group, Inc., an ASSA ABLOY Group company. All rights reserved.
Reproduction in whole or in part without the express written permission of ASSA ABLOY Accessories and Door Controls Group, Inc. is prohibited.

PEMKO
ASSA ABLOY
Experience a safer and more open world

SLIDING 200 SERIES

For Sliding Panels up to 200 lbs.
Manufactured by P.C. Henderson

280C Side Wall Mounted

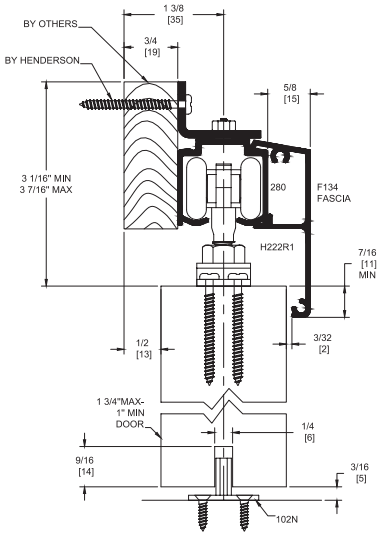

280C Soffit Mounted with Fascia

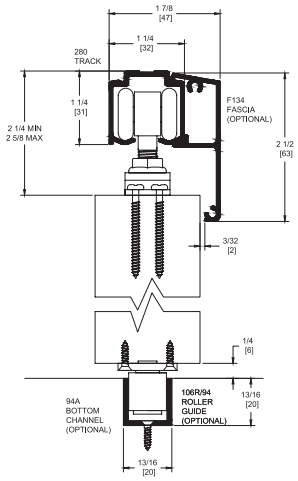

Configurations:
- Single
- Bi-parting

Installations:
- Overhead Mount
- Side Wall Mount

Features:
- Hanger body is made of nickel plated zinc alloy for durability and long life
- Steel ball bearing wheels coated in nylon for smooth operation
- 200 lb. panel capacity
- Galvanized steel track 280
- Clear anodized aluminum track 280C
- Optional Soft Close
- 5 year warranty
- Meets ADA push force requirements
- ANSI/BHMA A156.14 Grade 1 Certifiied (Non-Soft Close Model)

H200A Kits Include:

1 ea	**280C** Clear Anodized Aluminum Track
2 ea	**H222R1** Hangers
1 ea	**102N** Nylon Guide
2 ea	**TELS-14KIT** Stops
1 ea	Adjusting Wrench and Mounting Hardware

H200 Kits Include:

1 ea	**280** Steel Track
2 ea	**H222R1** Hangers
1 ea	**102N** Nylon Guide
2 ea	**TELS-14KIT** Stops
1 ea	Adjusting Wrench and Mounting Hardware

Standard Kit Sizes			
PART NUMBER	MATERIAL	TRACK LENGTH	DOOR WIDTH
H200A/4	Aluminum	48"	24"
H200A/6	Aluminum	72"	36"
H200A/7	Aluminum	84"	42"
H200A/8	Aluminum	96"	48"
H200A/10	Aluminum	120"	60"
H200A/12	Aluminum	144"	72"
H200/6	Steel	72"	36"
H200/8	Steel	96"	48"

Options:

Hardware Kit Mounting Bracket	**H200PACK** **PC2815** available as 5 pack only, **PC2815** pack of 5 281 zinc plated side wall bracket NOTE: Need one at each end and no more than 2 feet in-between. Fasteners included.
Track Stop (bumper)	**287R1-KIT**
Bottom Channel	**94A**
Fascia, Snap-On	**F134C** clear anodized (**280C** aluminum track only) **F134D** dark bronze anodized fascia
Track	**280D** dark bronze anodized
Roller Guide	**106R/94**
Side Wall Mortise Guide	**102WA** (steel) and **102WN** (nylon)
End Plate	**K134EP** (use with F134C and 280C only)
Polypropylene Guide Rail	**EPD3BL** for use with 102N or 102WN
Bottom guide	**138N-SG1KIT** Surface mounted bottom guide for 1 3/8" door panels

Soft Close available. See pages 256-258 for more information.

Copyright © 2015-2025, ASSA ABLOY Accessories and Door Controls Group, Inc., an ASSA ABLOY Group company. All rights reserved. Reproduction in whole or in part without the express written permission of ASSA ABLOY Accessories and Door Controls Group, Inc. is prohibited.

SIDE WALL TRACK (SWT) SYSTEM

For Sliding Panels up to 200 lbs.

The Pemko Side Wall Track System has a unique mounting bracket that is extruded with the track. An innovative wall mounted bottom guide assembly allows carpet to be replaced without removing the door.



SWT Kit Side Wall Mounted

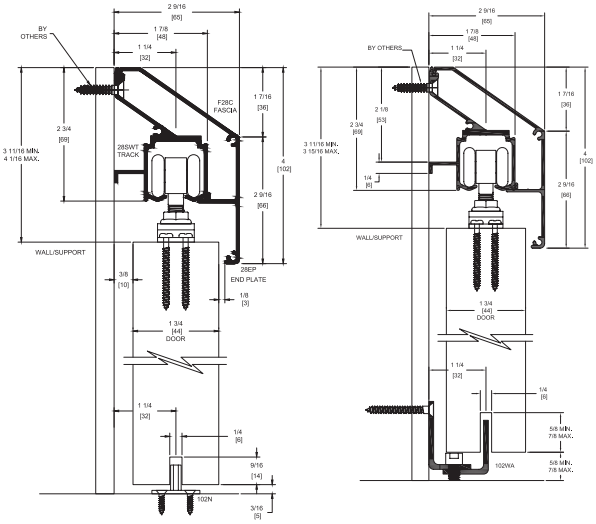

Configurations:
- Single
- Bi-parting

Installations:
- Side Wall Mount

Features:
- Unique mounting bracket extruded into track
- Supports up to 200 lbs. per door
- Quick, easy attachment
- New construction or retrofit
- Optional Soft Close
- 5 year warranty
- Meets ADA push force requirements
- ANSI/BHMA A156.14 Grade 1 Certifiied (Non-Soft Close Model)

280SWT Kits Include:

1ea **280A-SWT** Aluminum Track
1ea **280_-SWF** Aluminum Fascia
1ea **K28_-SWEP** Pair of End Plates
2ea **H222R1** Hangers
2ea **TELS-14KIT** In Track Stops
1ea **102N** White Nylon Mortise Guide
1ea **102WA** Wall Mounted Mortise Guide
1ea Adjusting Wrench

Standard Kit Sizes		
PART NUMBER	TRACK LENGTH	DOOR WIDTH
(Mill Finished Track/Clear Anodized Fascia/End Plates)		
280C-SWTKIT/6	72"	36"
280C-SWTKIT/8	96"	48"
280C-SWTKIT/12*	144"	2 @ 36"
(Mill Finished Track/Dark Bronze Anodized Fascia/End plates)		
280D-SWTKIT/6	72"	36"
280D-SWTKIT/8	96"	48"
280D-SWTKIT/12*	144"	2 @ 36"

*NOTE: 280_-SWTKIT/12 comes with enough hardware for two doors.

Options:

Hardware Kit (one door)	**H200PACK**
Roller Guide	**106R/94**
Bottom Channel	**94A**
Nylon Mortise Guide	**102WN**
Stainless Steel Flush Bolt	**FB150SS**
Stainless Steel Flush Pull	**503SF**
Bottom guide	**138N-SG1KIT** Surface mounted bottom guide for 1 3/8" door panels

Soft Close available. See pages 256-258 for more information.

AVAILABLE FINISHES FOR PRODUCTS SHOWN ON THIS PAGE
C (Anodized Aluminum) D (Dark Bronze Anodized)

Copyright © 2015-2025, ASSA ABLOY Accessories and Door Controls Group, Inc., an ASSA ABLOY Group company. All rights reserved.
Reproduction in whole or in part without the express written permission of ASSA ABLOY Accessories and Door Controls Group, Inc. is prohibited.

PEMKO
ASSA ABLOY
Experience a safer and more open world

SIDE WALL TRACK SYSTEM WITH RADIUS FASCIA (RF280_-SWTK)

For Sliding Panels up to 200 lbs.

Pemko Side Wall Track Systems have a unique mounting bracket that is extruded with the track. An innovative wall mounted bottom guide assembly allows carpet to be replaced without removing the door.

SWT Kit Side Wall Mounted

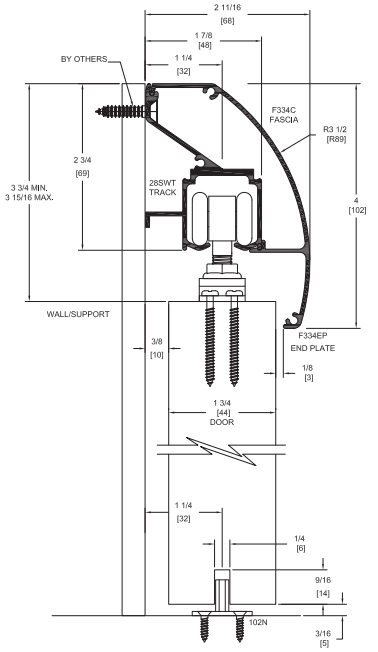

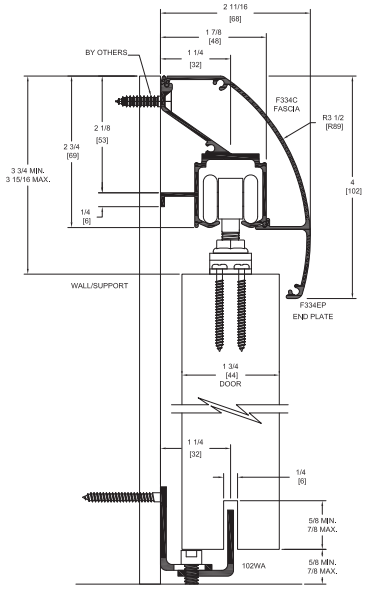

Configurations:
- Single
- Bi-parting

Installations:
- Side Wall Mount

Features:
- Unique mounting bracket extruded into track
- Supports up to 200 lbs. per door
- Quick, easy attachment
- New construction or retrofit
- Optional Soft Close
- 5 year warranty
- Meets ADA push force requirements
- ANSI/BHMA A156.14 Grade 1 Certifiied (Non-Soft Close Model)

RF280 SWT Kits Include:

1ea **280A-SWT** Aluminum Track
1ea **F334_** Aluminum Fascia
1ea **KF334_-SWEP** Pair of End Plates
2ea **H222R1** Hangers
2ea **TELS-14KIT** In Track Stops
1ea **102N** White Nylon Mortise Guide
1ea **102WA** Wall Mounted Mortise Guide
1ea Adjusting Wrench

Standard Kit Sizes		
PART NUMBER	TRACK LENGTH	DOOR WIDTH
(Mill Finished Track/Clear Anodized Fascia/End Plates)		
RF280C-SWTK/6	72"	36"
RF280C-SWTK/8	96"	48"
RF280C-SWTK/12 *	144"	2 @ 36"
(Mill Finished Track/Dark Bronze Anodized Fascia/End plates)		
RF280D-SWTK/6	72"	36"
RF280D-SWTK/8	96"	48"
RF280D-SWTK/12 *	144"	2 @ 36"

*NOTE: RF280_-SWTK/12 comes with enough hardware for two doors.

Options:

Hardware Kit (one door)	**H200PACK**
Roller Guide	**106R/94**
Bottom Channel	**94A**
Nylon Mortise Guide	**102WN**
Stainless Steel Flush Bolt	**FB150SS**
Stainless Steel Flush Pull	**503SF**
Bottom guide	**138N-SG1KIT** Surface mounted bottom guide for 1 3/8" door panels

Soft Close available. See pages 256-258 for more information.

AVAILABLE FINISHES FOR PRODUCTS SHOWN ON THIS PAGE
C (Clear Anodized) D (Dark Bronze Anodized)

PEMKO
ASSA ABLOY
Experience a safer and more open world

800-824-3018 | www.pemko.com
Check the web site for the up-to-date catalog

Copyright © 2015-2025, ASSA ABLOY Accessories and Door Controls Group, Inc., an ASSA ABLOY Group company. All rights reserved. Reproduction in whole or in part without the express written permission of ASSA ABLOY Accessories and Door Controls Group, Inc. is prohibited.

SIDE WALL TRACK SYSTEM WITH SQUARE FASCIA (SF280_-SWTK)

For Sliding Panels up to 200 lbs.

Pemko Side Wall Track Systems have a unique mounting bracket that is extruded with the track. An innovative wall mounted bottom guide assembly allows carpet to be replaced without removing the door.

SWT Kit Side Wall Mounted

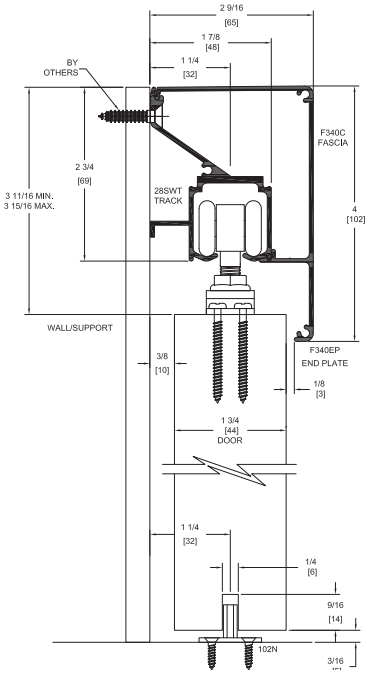

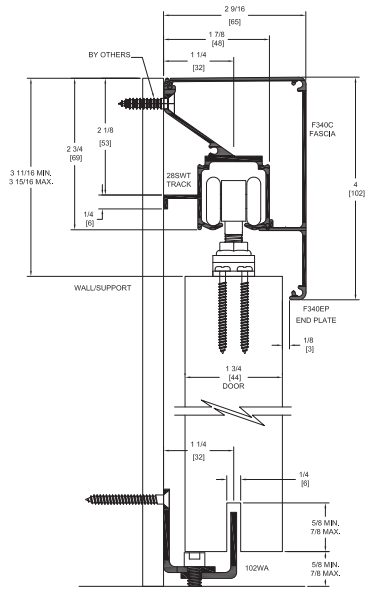

Configurations:
- Single
- Bi-parting

Installations:
- Side Wall Mount

Features:
- Unique mounting bracket extruded into track
- Supports up to 200 lbs. per door
- Quick, easy attachment
- New construction or retrofit
- Optional Soft Close
- 5 year warranty
- Meets ADA push force requirements
- ANSI/BHMA A156.14 Grade 1 Certifiied (Non-Soft Close Model)

SF280SWT Kits Include:

1ea **280A-SWT** Aluminum Track
1ea **F340_** Aluminum Fascia
1ea **KF340_-SWEP** Pair of End Plates
2ea **H222R1** Hangers
2ea **TELS-14KIT** In Track Stops
1ea **102N** White Nylon Mortise Guide
1ea **102WA** Wall Mounted Mortise Guide
1ea Adjusting Wrench

Standard Kit Sizes		
PART NUMBER	TRACK LENGTH	DOOR WIDTH
(Mill Finished Track/Clear Anodized Fascia/End Plates)		
SF280C-SWTK/6	72"	36"
SF280C-SWTK/8	96"	48"
SF280C-SWTK/12 *	144"	2 @ 36"
(Mill Finished Track/Dark Bronze Anodized Fascia/End plates)		
SF280D-SWTK/6	72"	36"
SF280D-SWTK/8	96"	48"
SF280D-SWTK/12 *	144"	2 @ 36"

*NOTE: SF280_-SWTK/12 comes with enough hardware for two doors.

Options:

Hardware Kit (one door)	**H200PACK**
Roller Guide	**106R/94**
Bottom Channel	**94A**
Nylon Mortise Guide	**102WN**
Stainless Steel Flush Bolt	**FB150SS**
Stainless Steel Flush Pull	**503SF**
Bottom guide	**138N-SG1KIT** Surface mounted bottom guide for 1 3/8" door panels

Soft Close available. See pages 256-258 for more information.

AVAILABLE FINISHES FOR PRODUCTS SHOWN ON THIS PAGE
C (Clear Anodized) D (Dark Bronze Anodized)

Copyright © 2015-2025, ASSA ABLOY Accessories and Door Controls Group, Inc., an ASSA ABLOY Group company. All rights reserved.
Reproduction in whole or in part without the express written permission of ASSA ABLOY Accessories and Door Controls Group, Inc. is prohibited.

PEMKO
ASSA ABLOY
Experience a safer and more open world

BYPASS TRACK SERIES

For Bypass Panels up to 200 lbs.

1 3/4" Thick Doors
Side Wall Mount

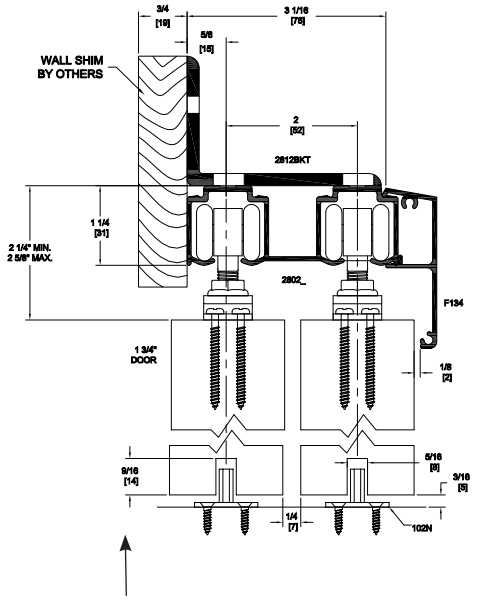

NOTE: Route door 9/16" deep by 1/4" wide to receive 102N Guide.

1 3/4" Thick Doors
Overhead Mount

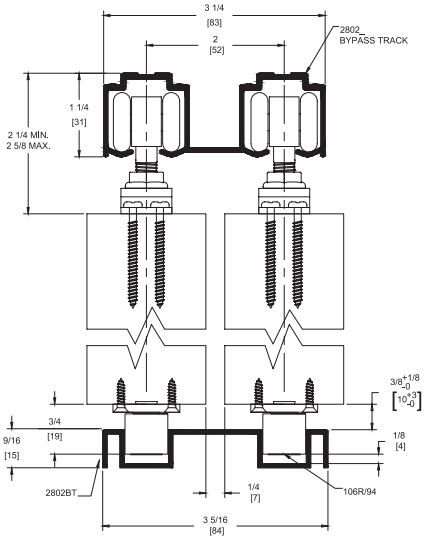

* Side Wall mounting: use one (1) 2812KIT at each end of track and 24" on center

Configurations:

- For Bypass Doors

Features:

- Fits 1 3/8" and 1 3/4" doors
- Hanger body is made of nickel plated zinc alloy for durability and long life
- Steel ball bearing wheels coated in nylon for smooth operation
- 200 lb. panel capacity
- Load capacity 200 lbs. per door panel (2 hangers)
- Extruded aluminum track
- Optional Soft Close
- 5 year warranty
- Meets ADA push force requirements
- ANSI/BHMA A156.14 Grade 1 Certifiied (Non-Soft Close Model)

HBP200A Kits Include:

1 ea **2802C** Clear Anodized Aluminum Track
4 ea **H222R1** Hangers
2 ea **102N** White Nylon Mortise Guide
4 ea **TELS-14KIT** In Track Stops
1 ea Adjusting Wrench and Mounting Hardware

Standard Kit Sizes		
PART NUMBER	TRACK LENGTH	DOOR WIDTH
HBP200A/4	48"	2 @ 26" Min*
HBP200A/5'4	64"	2 @ 34" Min*
HBP200A/6	72"	2 @ 38" Min*
HBP200A/7	84"	2 @ 44" Min*
HBP200A/8	96"	2 @ 50" Min*
HBP200A/10	120"	2 @ 62" Min*
HBP200A/12	144"	2 @ 74" Min*

*Minimum door overlap is 2".

Options:

Hardware Kit	**H200PACK**
Mounting Bracket	**2812KIT**
Track	**2802D** dark bronze anodized track
Track Stop (bumper)	**287R1-KIT**
Bottom Channel	**94A**
Fascia, Snap-On	**F134C** clear anodized aluminum fascia. **F134D** dark bronze anodized aluminum fascia
Roller Guide	**106R/94**
Dual Guide Channel	**2802BT**
Polypropylene Guide Rail	**EPD3BL** for use with 102N
Bottom guide	**138N-SG1KIT** Surface mounted bottom guide for 1 3/8" door panels **138N-SG2KIT** Surface mounted bottom guide for 1 3/8" bypassing door panels

Soft Close available. See pages 256-258 for more information.

AVAILABLE FINISHES FOR PRODUCTS SHOWN ON THIS PAGE
C (Clear Anodized) D (Dark Bronze Anodized)

PEMKO
ASSA ABLOY
Experience a safer and more open world

800-824-3018 | www.pemko.com
Check the web site for the up-to-date catalog

Copyright © 2015-2025, ASSA ABLOY Accessories and Door Controls Group, Inc., an ASSA ABLOY Group company. All rights reserved. Reproduction in whole or in part without the express written permission of ASSA ABLOY Accessories and Door Controls Group, Inc. is prohibited.

SIM200A SERIES

For Sliding Doors up to 48" wide and 200 lbs.
Manufactured by P.C. Henderson

Simultaneous Action Unit (SIM) allows the simultaneous operation of two doors.

Configurations:
- Bi-parting

Installations:
- Overhead Mount
- Side Wall Mount

Features:
- Allows individual bi-part doors to act as a single operating unit. When one door is opened or closed, the second door operates simultaneously
- 200 lb. panel capacity
- Hanger body is made of nickel plated zinc alloy for durability and long life
- Steel ball bearing wheels coated in nylon for smooth operation
- Clear anodized aluminum track 280C
- 2 year warranty

Side Wall Mount

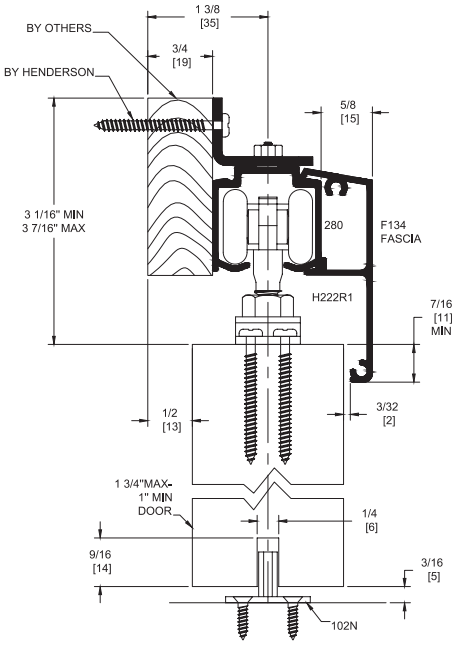

Overhead Mount

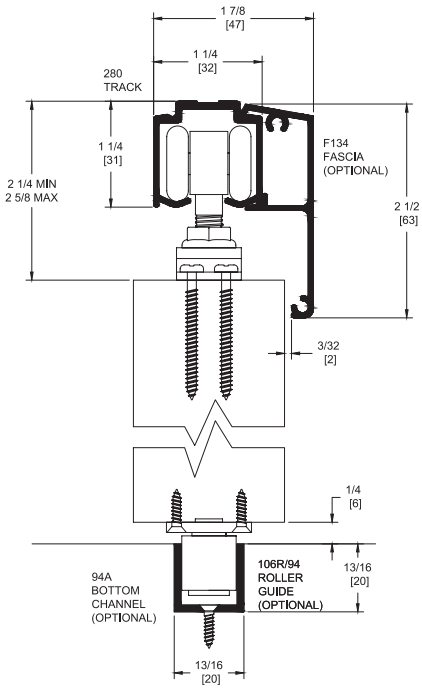

SIM200A Kits Include:

1 ea **280C** Clear Anodized Aluminum Track
4 ea **H222R1** Hangers
4 ea **601H** Nylon In-Track Clip Stop
2 ea **102N** White Nylon Mortise Guide
1 ea **SIM100** Cable and Pulley Kit

Standard Kit Sizes			
PART NUMBER	MATERIAL	TRACK LENGTH	DOOR WIDTH
SIM200A/6	Aluminum	72"	2 @ 18"
SIM200A/8	Aluminum	96"	2 @ 24"
SIM200A/12	Aluminum	144"	2 @ 36"
SIM200A/16	Aluminum	2 @ 96"	2 @ 48"

Options:

Fascia	**F134C** clear anodized aluminum fascia **F134D** dark bronze anodized fascia **280D** dark bronze anodized
Side Wall Track Brackets	**PC2815** available as 5 pack only, **PC2815** pack of 5 281 zinc plated side wall bracket. NOTE: Need one at each end and no more than 2 feet in-between. Fasteners included.
End Plates	**K134EP** (use with F134C only)
Bottom Channel	**94A**
Roller Guide	**106R/94**
Side Wall Mortise Guides	**102WN** (nylon) and **102WA** (steel)
Polypropylene Guide Rail	**EPD3BL** for use with 102N or 102WN
Bottom guide	**138N-SG1KIT** Surface mounted bottom guide for 1 3/8" door panels

Copyright © 2015-2025, ASSA ABLOY Accessories and Door Controls Group, Inc., an ASSA ABLOY Group company. All rights reserved.
Reproduction in whole or in part without the express written permission of ASSA ABLOY Accessories and Door Controls Group, Inc. is prohibited.

PEMKO
ASSA ABLOY
Experience a safer and more open world

LP200 SERIES

For Sliding Panels up to 200 lbs.
Manufactured by P.C. Henderson

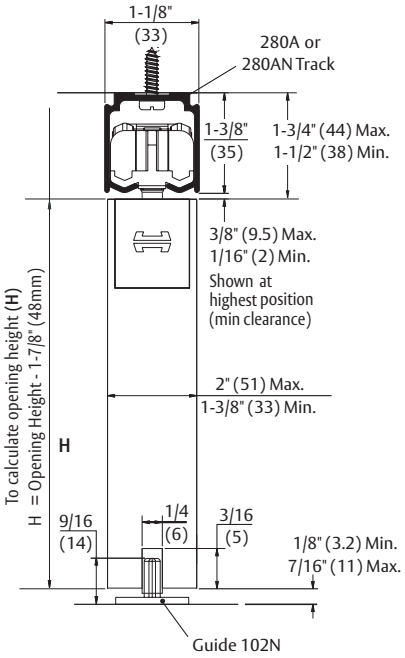

Low profile design for use where space is limited.

Configurations:
- Single
- Bi-parting

Installations:
- Overhead Mount
- Side Wall Mount

Features:
- Used to maximize door height
- Designed to give a modern clean finish with all parts concealed. Ideal for applications where minimal clearance between track and door is required
- Easy installation and adjustment
- 200 lb. panel capacity
- Needle bearing nylon wheels for smooth operation
- Clear anodized aluminum track 280C
- 2 year warranty
- Meets ADA push force requirements

LP200A Kits Include:

1 ea **280C** Clear Anodized Aluminum Track
1 ea **LH100** Hardware Kit

LH100 Hardware Kits Include:

2 ea Low Head Room Units
2 ea End Caps
2 ea In-Track Clip Stops
1 ea Screw Pack
2 ea Low Head Room Hangers
1 ea **102N** White Nylon Mortise Guide
1 ea Small Spanner and 4mm Allen Key

Standard Kit Sizes			
PART NUMBER	MATERIAL	TRACK LENGTH	DOOR WIDTH
LP200A/6	Aluminum	72"	36"
LP200A/8	Aluminum	96"	48"
LP200A/10	Aluminum	120"	60"

Options:

Side Wall Track Bracket	**PC2815** available as 5 pack only, **PC2815** pack of 5 281 zinc plated side wall bracket NOTE: Need one at each end and no more than 2 feet in-between. Fasteners included.
Bottom Channel	**94A**
Roller Guide	**106R/94**
Bottom guide	**138N-SG1KIT** Surface mounted bottom guide for 1 3/8" door panels

PEMKO
ASSA ABLOY
Experience a safer and more open world

800-824-3018 | www.pemko.com
Check the web site for the up-to-date catalog

Copyright © 2015-2025, ASSA ABLOY Accessories and Door Controls Group, Inc., an ASSA ABLOY Group company. All rights reserved. Reproduction in whole or in part without the express written permission of ASSA ABLOY Accessories and Door Controls Group, Inc. is prohibited.

LBP75A LIGHTWEIGHT SLIDING SYSTEM



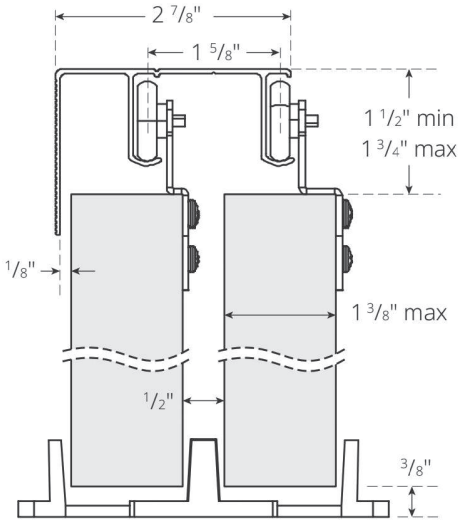

Configuration:

- By-passing

Installation:

- Overhead Mount

Features:

- Hanger body made of plated zinc alloy for durability and long life
- Fiberglass reinforced nylon wheels with sealed, zinc-plated bearings
- 75 lb. per panel capacity
- Meets ADA push and pull force requirements
- Aluminum track with built-in fascia
- Adjustable, modular nylon bottom guide accommodates doors up to 1-3/8" thick
- 5 yr warranty

LBP75A Kits Include:

1ea	Aluminum Track with Fascia
4ea	Hangers
1ea	Floor Guide
1ea	Door Stop
2ea	Door pull

*For configurations with more than 2 doors, purchase of additional kits (LBP75PACK) is required.

Standard Kit Sizes		
PART NUMBER	TRACK LENGTH	DOOR WIDTH
LBP75A/4	48"	2 @ 25" MIN**
LBP75A/5	60"	2 @ 31" MIN**
LBP75A/6	72"	2 @ 37" MIN**
LBP75A/8	96"	2 @ 49" MIN**

**Minimum door overlap is 2”

Options:

Hardware Kit (one door)	**LBP75PACK**
Polypropylene Guide Rail	**EPD3BL** for use with 102N
Bottom Guide	**102N** – Mortise Guide

Copyright © 2015-2025, ASSA ABLOY Accessories and Door Controls Group, Inc., an ASSA ABLOY Group company. All rights reserved.
Reproduction in whole or in part without the express written permission of ASSA ABLOY Accessories and Door Controls Group, Inc. is prohibited.

PEMKO
ASSA ABLOY
Experience a safer and more open world

SIROCCO SERIES

For Sliding Panels up to 176 lbs.

Manufactured by P.C. Henderson

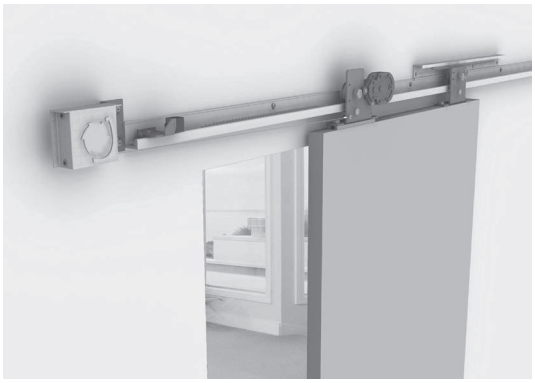

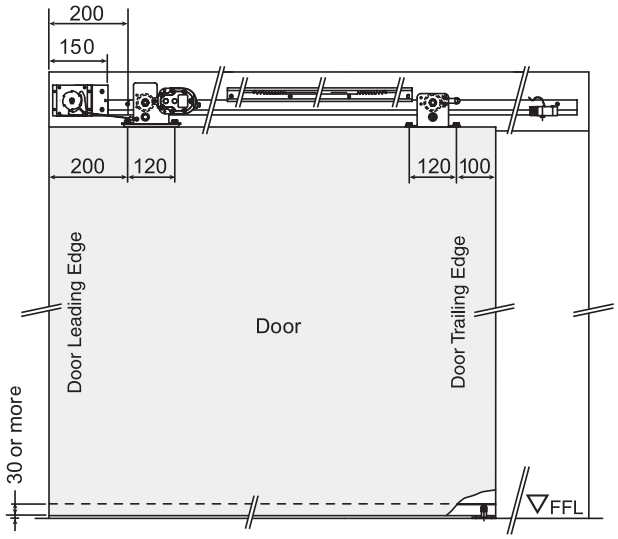

Right Hand SIRRH Shown Above and Below

The Sirocco system is a quiet, user friendly, self closing system which brings the door gently to a close.

The integrated hydraulic soft stop brings the door to a safe and cushioned close making it ideal for disabled access systems or public areas. The internal door brake can also be adjusted to allow the user to dictate the speed of opening preventing damage to the door and system.

Configurations:

- Single

Installations:

- Side Wall Mount

Features:

- Self closing system for a single door from 31½" to 47¼" wide and up to 176 lbs.
- Interior applications only
- Comes complete with a hydraulically controlled soft close feature
- Adjustable closing speed
- Door brake to reduce opening speed to prevent damage to the door and system
- Optional hold open unit giving adjustable time delay before self closing
- Operational between temperature ranges of 50 to 104 degrees Fahrenheit
- 2 year warranty
- Meets ADA push force requirements

Sirocco Series Kits Include:

1 ea	Track 86.61" long
1 ea	Leading hanger
1 ea	Trailing hanger
1 ea	Hydraulic Control Unit
1 ea	Closing brake rack
1 ea	Opening brake rack
1 ea	Power spring mounting bracket
7 ea	Height adjustment plates
1 ea	Power spring unit
1 ea	Guide roller
1 ea	Opening door stop
1 ea	Door stop roller
1 ea	Closing door stop
2 ea	Wooden door plate (and all required screws and bolts)

Standard Kits	
PART NUMBER	DESCRIPTION
SIRRH	Right Hand Opening Kit
SIRLH	Left Hand Opening Kit

Copyright © 2015-2025, ASSA ABLOY Accessories and Door Controls Group, Inc., an ASSA ABLOY Group company. All rights reserved. Reproduction in whole or in part without the express written permission of ASSA ABLOY Accessories and Door Controls Group, Inc. is prohibited.

H440A-OH SERIES

For Sliding Panels up to 440 lbs.
Manufactured by P.C. Henderson

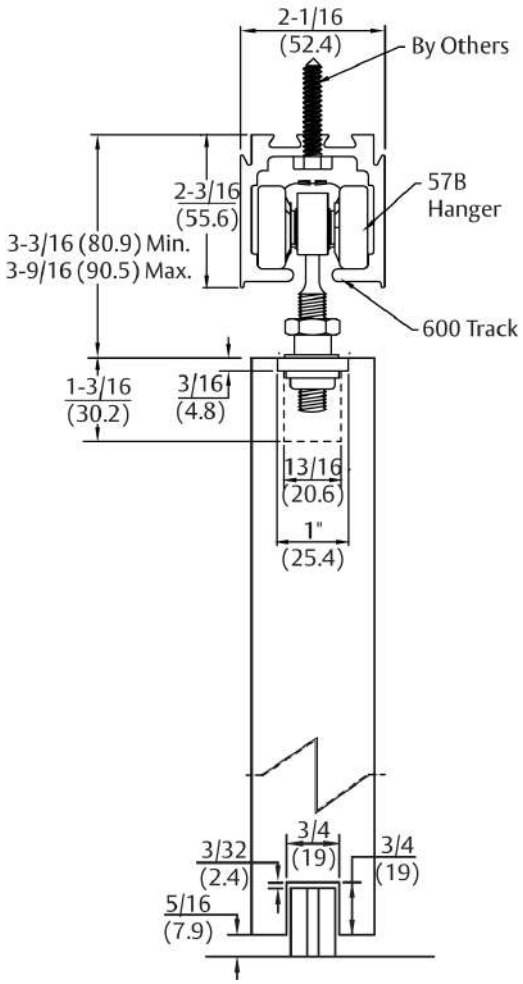

Configurations:
- Single
- Bi-parting

Installations:
- Overhead Mount

Features:
- Overhead mount system
- Nylon body and steel ball bearing nylon wheels for smooth operation
- 440 lb. panel capacity
- Mill finished aluminum track 600A
- 2 year warranty
- Meets ADA push force requirements

H440A-OH Kits Include:

1 ea **600A** Mill Finished Aluminum Track
2 ea **57B** Hangers: Gray Nylon Body, Zinc Coated Steel Pendant Bolt, Steel Ball Bearing Nylon Wheels
2 ea **601P** Nylon In-Track Clip Stop
1 ea **89/2N** Gray Nylon Mortise Guide

Standard Kit Sizes			
PART NUMBER	MATERIAL	TRACK LENGTH	DOOR WIDTH
H440A-OH/6	Aluminum	72"	36"
H440A-OH/8	Aluminum	96"	48"
H440A-OH/10	Aluminum	120"	60"
H440A-OH/12	Aluminum	144"	72"
H440A-OH/16	Aluminum	192"	96"

Options:

Bottom Channel	**94A**
Roller Guide	**106R/94**
Mortise Guides	**102N**
Stainless Steel Flush Bolt	**FB150SS**
Stainless Steel Flush Pull	**503SF**

Copyright © 2015-2025, ASSA ABLOY Accessories and Door Controls Group, Inc., an ASSA ABLOY Group company. All rights reserved.
Reproduction in whole or in part without the express written permission of ASSA ABLOY Accessories and Door Controls Group, Inc. is prohibited.

H440A-SW SERIES

For Sliding Panels up to 440 lbs.
Manufactured by P.C. Henderson

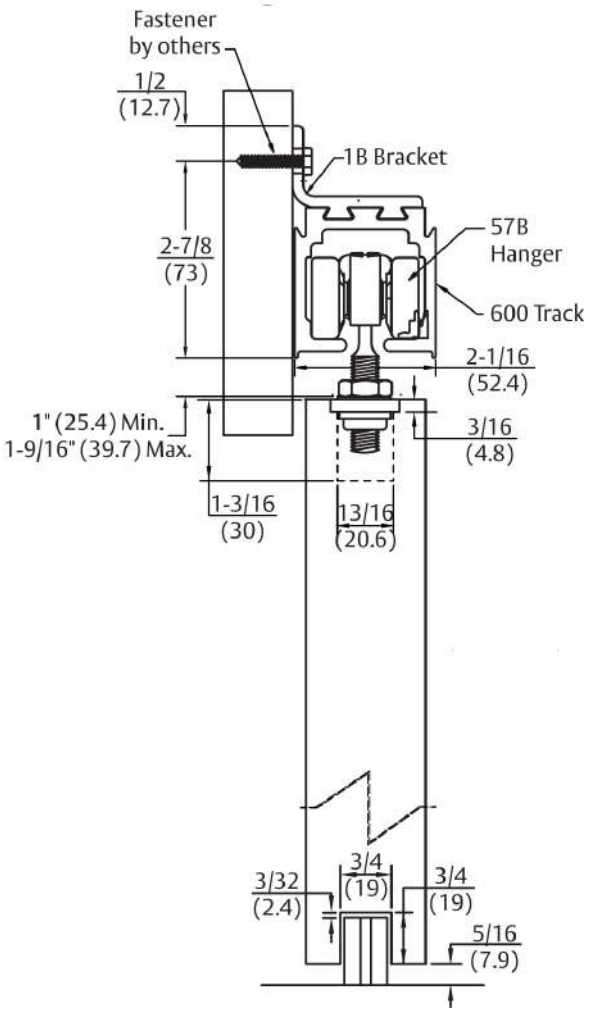

Configurations:
- Single
- Bi-parting

Installations:
- Side Wall Mount

Features:
- Side wall mount system
- Nylon body and steel ball bearing nylon wheels for smooth operation
- 440 lb. panel capacity
- Mill finished aluminum track 600A
- 2 year warranty
- Meets ADA push force requirements

H440A-SW Kits Include:

1 ea	**600A** Mill Finished Aluminum Track
–	**1B** Side Wall Mount Track Brackets (One at each end and no more than 3 feet in between)
2 ea	**57B** Hangers: Gray Nylon Body, Zinc Coated Steel Pendant Bolt, Steel Ball Bearing Nylon Wheels
2 ea	**601P** Nylon In-Track Clip Stop
1 ea	**89/2N** Gray Nylon Mortise Guide

Standard Kit Sizes			
PART NUMBER	MATERIAL	TRACK LENGTH	DOOR WIDTH
H440A-SW/6	Aluminum	72"	36"
H440A-SW/8	Aluminum	96"	48"
H440A-SW/10	Aluminum	120"	60"
H440A-SW/12	Aluminum	144"	72"
H440A-SW/16	Aluminum	192"	96"

Options:

Bottom Channel	**94A**
Roller Guide	**106R/94**
Mortise Guides	**102N**
Side Wall Mortise Guides	**102WN** (nylon) and **102WA** (steel)
Joining Bracket	**1BX**
Stainless Steel Flush Bolt	**FB150SS**
Stainless Steel Flush Pull	**503SF**

Copyright © 2015-2025, ASSA ABLOY Accessories and Door Controls Group, Inc., an ASSA ABLOY Group company. All rights reserved. Reproduction in whole or in part without the express written permission of ASSA ABLOY Accessories and Door Controls Group, Inc. is prohibited.

TBS200A-OH SERIES

For Sliding Panels up to 200 lbs.
Manufactured by Pemko Manufacturing

Configurations:
- Single
- Bi-parting

Installations:
- Overhead Mount

Features:
- Overhead mount system
- Nylon body and steel ball bearing nylon wheels for smooth operation
- 200 lb. panel capacity
- Clear anodized aluminum track 280C
- 2 year warranty
- Meets ADA push force requirements
- ANSI/BHMA A156.14 Grade 1 Certifiied

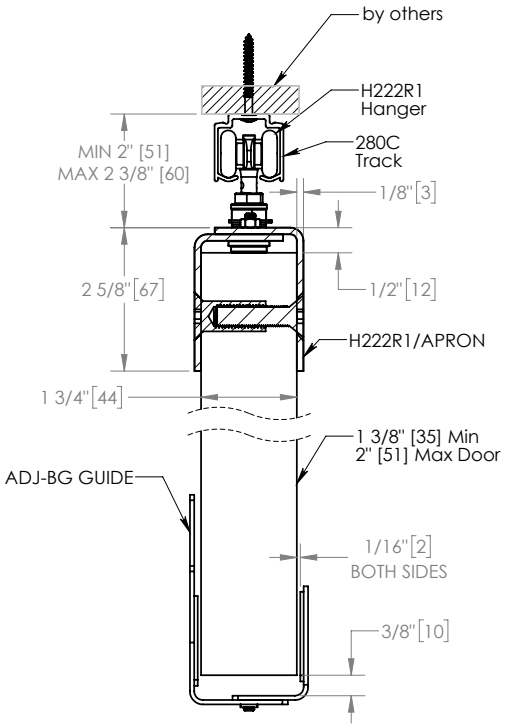

TBS200A-OH

TBS200A-OH Kits Include:

1 ea **280C** Clear Anodized Aluminum Track
2 ea **H222R1 Hanger** Gray Nylon Body, Zinc Coated Steel Pendant Bolt, Steel Ball Bearing Nylon Wheels
2 ea **H222R1/APRON** Mounting Apron Through-Bolted
1 ea **ADJ-BG** Surface Type Guide
2 ea **TELS-14KIT** Nylon In-Track Clip Stop

Standard Kit Sizes			
PART NUMBER	MATERIAL	TRACK LENGTH	DOOR WIDTH
TBS200A-OH/6	Aluminum	72"	36"
TBS200A-OH/8	Aluminum	96"	48"
TBS200A-OH/10	Aluminum	120"	60"
TBS200A-OH/12	Aluminum	144"	72"

Copyright © 2015-2025, ASSA ABLOY Accessories and Door Controls Group, Inc., an ASSA ABLOY Group company. All rights reserved.
Reproduction in whole or in part without the express written permission of ASSA ABLOY Accessories and Door Controls Group, Inc. is prohibited.

PEMKO
ASSA ABLOY
Experience a safer and more open world

TBS200A-SW SERIES

For Sliding Panels up to 200 lbs.
Manufactured by Pemko Manufacturing

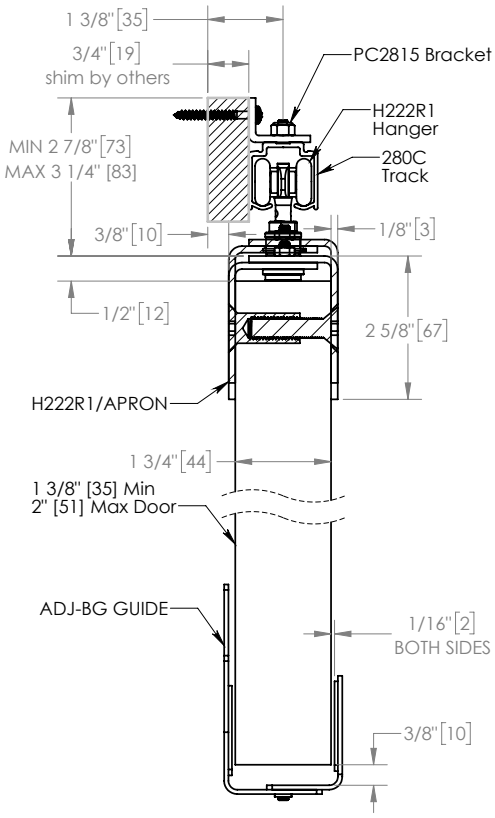

Configurations:

- Single
- Bi-parting

Installations:

- Side Wall Mount

Features:

- Side wall mount system
- Nylon body and steel ball bearing nylon wheels for smooth operation
- 200 lb. panel capacity
- Clear anodized aluminum track 280C
- 2 year warranty
- Meets ADA push force requirements
- ANSI/BHMA A156.14 Grade 1 Certifiied

TBS200A-SW Kits Include:

1 ea	**200** Clear Anodized Aluminum Track
–	**PC2815** Side Wall Mount Track Brackets (One at each end and no more than 3 feet in between)
2 ea	**H222R1 HANGER** Gray Nylon Body, Zinc Coated Steel Pendant Bolt, Steel Ball Bearing Nylon Wheels
2 ea	**H222R1/APRON** Mounting Apron Through-Bolted
1 ea	**ADJ-BG** Surface Type Guide
2 ea	**TELS-14KIT** Nylon In-Track Clip Stop

Standard Kit Sizes			
PART NUMBER	MATERIAL	TRACK LENGTH	DOOR WIDTH
TBS200A-SW/6	Aluminum	72"	36"
TBS200A-SW/8	Aluminum	96"	48"
TBS200A-SW/10	Aluminum	120"	60"
TBS200A-SW/12	Aluminum	144"	72"

PEMKO
ASSA ABLOY
Experience a safer and more open world

Copyright © 2015-2025, ASSA ABLOY Accessories and Door Controls Group, Inc., an ASSA ABLOY Group company. All rights reserved. Reproduction in whole or in part without the express written permission of ASSA ABLOY Accessories and Door Controls Group, Inc. is prohibited.

TBS250A-OH SERIES

For Sliding Panels up to 250 lbs.
Manufactured by Pemko Manufacturing

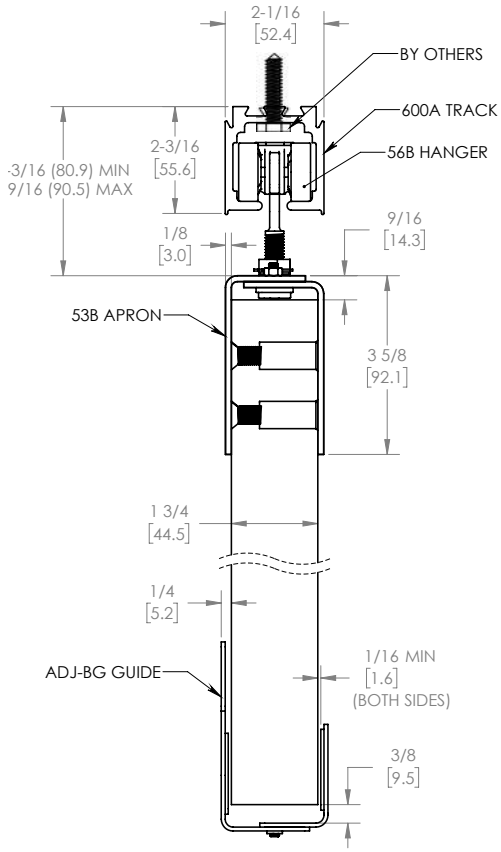

Configurations:

- Single
- Bi-parting

Installations:

- Overhead Mount

Features:

- Overhead mount system
- Nylon body and steel ball bearing nylon wheels for smooth operation
- 250 lb. panel capacity
- Mill finished aluminum track 600A
- 2 year warranty
- Meets ADA push force requirements

TBS250A-OH Kits Include:

1 ea **600A** Mill Finished Aluminum Track
2 ea **56B** Hangers: Gray Nylon Body, Zinc Coated Steel Pendant Bolt, Steel Ball Bearing Nylon Wheels
2 ea **53B/APRON** Mounting Brackets Thru-Bolted
1 ea **ADJ-BG** Surface Type Guide
2 ea **601P** Nylon In-Track Clip Stop

Standard Kit Sizes			
PART NUMBER	MATERIAL	TRACK LENGTH	DOOR WIDTH
TBS250A-OH/6	Aluminum	72"	36"
TBS250A-OH/8	Aluminum	96"	48"
TBS250A-OH/10	Aluminum	120"	60"
TBS250A-OH/12	Aluminum	144"	72"
TBS250A-OH/16	Aluminum	192"	96"

Copyright © 2015-2025, ASSA ABLOY Accessories and Door Controls Group, Inc., an ASSA ABLOY Group company. All rights reserved.
Reproduction in whole or in part without the express written permission of ASSA ABLOY Accessories and Door Controls Group, Inc. is prohibited.

PEMKO
ASSA ABLOY
Experience a safer and more open world

TBS250A-SW SERIES

For Sliding Panels up to 250 lbs.
Manufactured by Pemko Manufacturing

Configurations:
- Single
- Bi-parting

Installations:
- Side Wall Mount

Features:
- Side wall mount system
- Nylon body and steel ball bearing nylon wheels for smooth operation
- 250 lb. panel capacity
- Mill finished aluminum track 600A
- 2 year warranty
- Meets ADA push force requirements

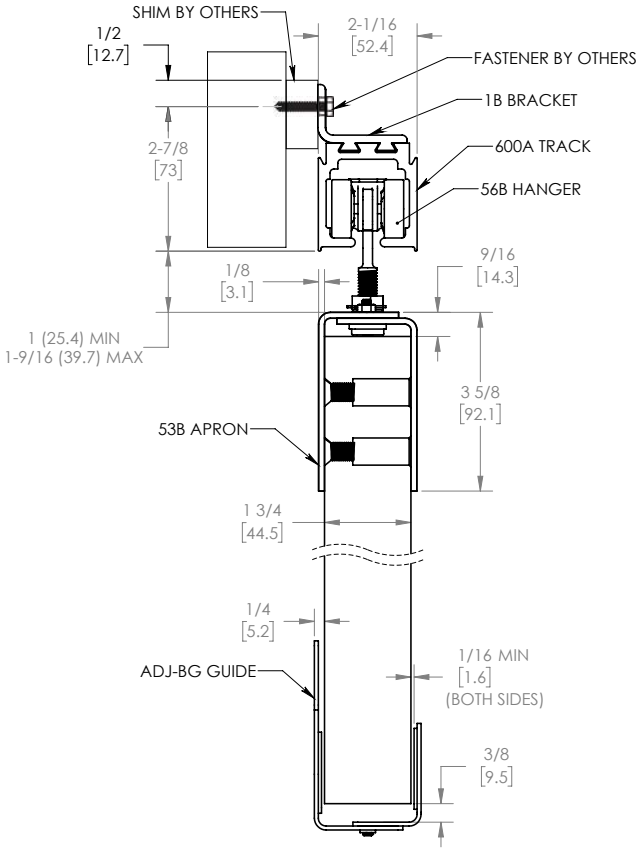

TBS250A-SW Kits Include:

1 ea **600A** Mill Finished Aluminum Track
– **1B** Side Wall Mount Track Brackets (One at each end and no more than 3 feet in between)
2 ea **56B** Hangers: Gray Nylon Body, Zinc Coated Steel Pendant Bolt, Steel Ball Bearing Nylon Wheels
2 ea **53B/APRON** Mounting Brackets Thru-Bolted
1 ea **ADJ-BG** Surface Type Guide
2 ea **601P** Nylon In-Track Clip Stop

Standard Kit Sizes			
PART NUMBER	MATERIAL	TRACK LENGTH	DOOR WIDTH
TBS250A-SW/6	Aluminum	72"	36"
TBS250A-SW/8	Aluminum	96"	48"
TBS250A-SW/10	Aluminum	120"	60"
TBS250A-SW/12	Aluminum	144"	72"
TBS250A-SW/16	Aluminum	192"	96"

Copyright © 2015-2025, ASSA ABLOY Accessories and Door Controls Group, Inc., an ASSA ABLOY Group company. All rights reserved. Reproduction in whole or in part without the express written permission of ASSA ABLOY Accessories and Door Controls Group, Inc. is prohibited.

H600S-OH SERIES

For Sliding Panels up to 600 lbs.
Manufactured by P.C. Henderson

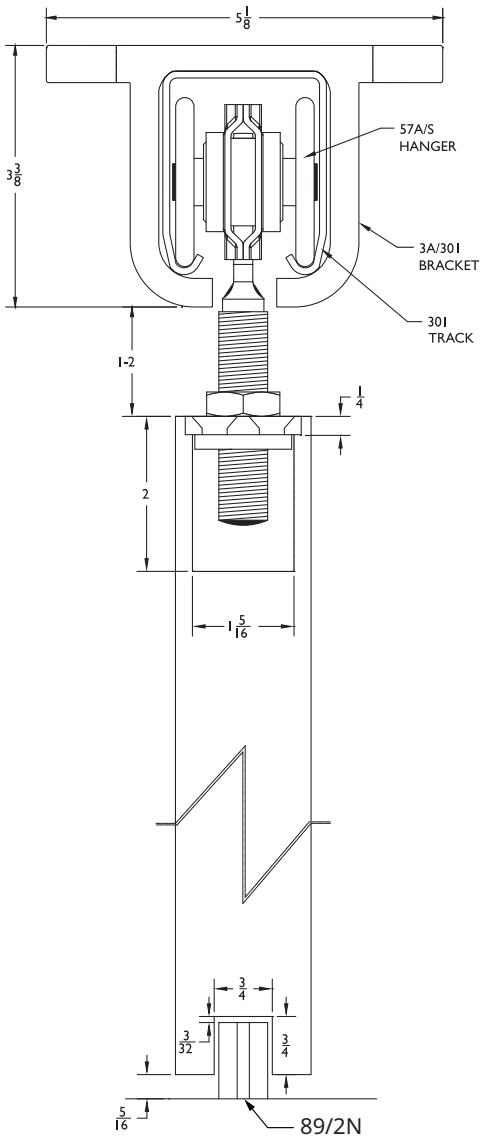

Configurations:
- Single
- Bi-parting

Installations:
- Overhead Mount

Features:
- Overhead mount system
- Heavy duty zinc coated steel
- Ball bearing wheels
- 600 lb. panel capacity
- Galvanized steel track 301
- 2 year warranty

H600S-OH Kits Include:

1 ea **301** Galvanized Steel Track
– **3A/301** Aluminum Alloy Overhead Mount Track Brackets
(One at each end and no more than three feet in between)
2 ea **1A/301/EC** Aluminum Alloy End Caps
2 ea **57A/S** Zinc Coated Steel Body, Wheels, and Pendant Bolt Hangers
2 ea **HH3/301** Galvanized Steel In-Track Stops
1 ea **89/2N** Gray Nylon Mortise Guide

Standard Kit Sizes			
PART NUMBER	MATERIAL	TRACK LENGTH	DOOR WIDTH
H600S-OH/8	Steel	96"	48"
H600S-OH/10	Steel	120"	60"
H600S-OH/12	Steel	144"	72"

Options:

Bottom Channel	**94A**
Roller Guide	**106R/94**
Mortise Guides	**102N**
Joining Bracket	**3AX/301**
Stainless Steel Flush Bolt	**FB150SS**
Stainless Steel Flush Pull	**503SF**

Copyright © 2015-2025, ASSA ABLOY Accessories and Door Controls Group, Inc., an ASSA ABLOY Group company. All rights reserved.
Reproduction in whole or in part without the express written permission of ASSA ABLOY Accessories and Door Controls Group, Inc. is prohibited.

PEMKO
ASSA ABLOY
Experience a safer and more open world

H600S-SW SERIES

For Sliding Panels up to 600 lbs.
Manufactured by P.C. Henderson

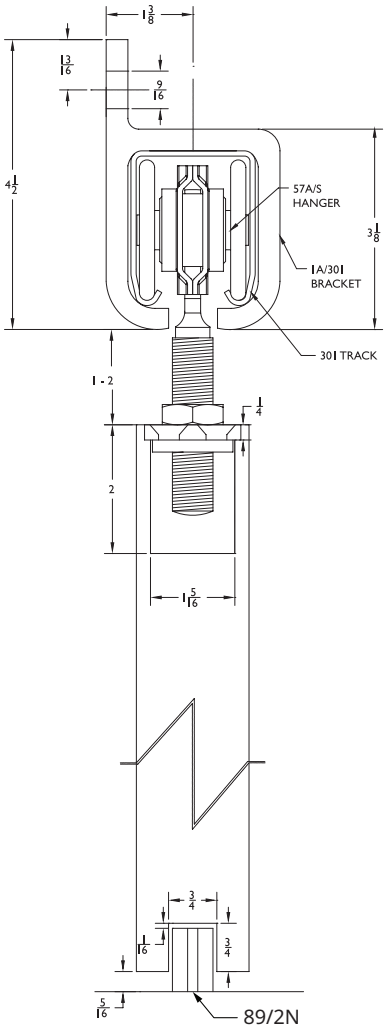

Configurations:
- Single
- Bi-parting

Installations:
- Side Wall Mount

Features:
- Side wall mount system
- Heavy duty zinc coated steel
- Ball bearing wheels
- 600 lb. panel capacity
- Galvanized steel track 301
- 2 year warranty

H600S-SW Kits Include:

1 ea	**301** Galvanized Steel Track
–	**1A/301** Side Wall Mount Track Brackets (One at each end and no more than three feet in between)
2 ea	**1A/301/EC** Aluminum Alloy End Caps
2 ea	**57A/S** Zinc Coated Steel Body, Wheels, and Pendant Bolt Hangers
2 ea	**HH3/301** Galvanized Steel In-Track Stops
1 ea	**89/2N** Gray Nylon Mortise Guide

Standard Kit Sizes			
PART NUMBER	MATERIAL	TRACK LENGTH	DOOR WIDTH
H600S-SW/8	Steel	96"	48"
H600S-SW/12	Steel	144"	72"

Options:

Bottom Channel	**94A**
Roller Guide	**106R/94**
Mortise Guides	**102N**
Side Wall Mortise Guides	**102WN**
Joining Bracket	**1AX/301**
Stainless Steel Flush Bolt	**FB150SS**
Stainless Steel Flush Pull	**503SF**

Copyright © 2015-2025, ASSA ABLOY Accessories and Door Controls Group, Inc., an ASSA ABLOY Group company. All rights reserved. Reproduction in whole or in part without the express written permission of ASSA ABLOY Accessories and Door Controls Group, Inc. is prohibited.

H800S-OH SERIES

For Sliding Panels up to 800 lbs.
Manufactured by P.C. Henderson

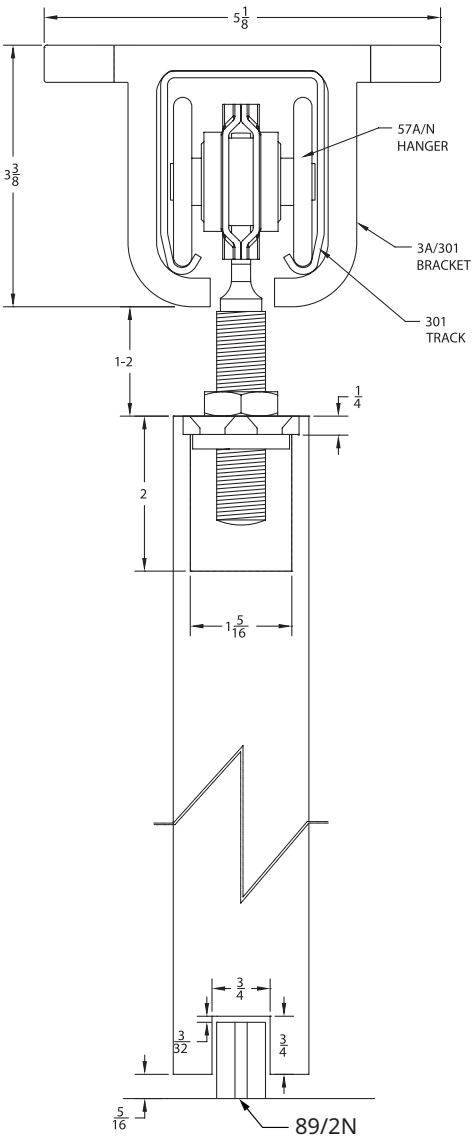

Configurations:
- Single
- Bi-parting

Installations:
- Overhead Mount

Features:
- Overhead mount system
- Heavy duty zinc coated steel body
- Ball bearing nylon wheels for smooth operation
- 800 lb. panel capacity
- Galvanized steel track 301
- 2 year warranty

H800S-OH Kits Include:

1 ea **301** Galvanized Steel Track
– **3A/301** Overhead Mount Track Brackets (One at each end and no more than three feet in between)
2 ea **1A/301/EC** Aluminum Alloy End Caps
2 ea **57A/N** Zinc Coated Steel Body, Nylon Wheels, and Pendant Bolt Hangers
2 ea **HH3/301** Galvanized Steel In-Track Stop
1 ea **89/2N** Gray Nylon Mortise Guide

Standard Kit Sizes			
PART NUMBER	MATERIAL	TRACK LENGTH	DOOR WIDTH
H800S-OH/8	Steel	96"	48"
H800S-OH/10	Steel	120"	60"

Options:

Bottom Channel	**94A**
Roller Guide	**106R/94**
Mortise Guides	**102N**
Joining Bracket	**3AX/301**
Stainless Steel Flush Bolt	**FB150SS**
Stainless Steel Flush Pull	**503SF**

Copyright © 2015-2025, ASSA ABLOY Accessories and Door Controls Group, Inc., an ASSA ABLOY Group company. All rights reserved.
Reproduction in whole or in part without the express written permission of ASSA ABLOY Accessories and Door Controls Group, Inc. is prohibited.

PEMKO
ASSA ABLOY
Experience a safer and more open world

H800S-SW SERIES

For Sliding Panels up to 800 lbs.
Manufactured by P.C. Henderson

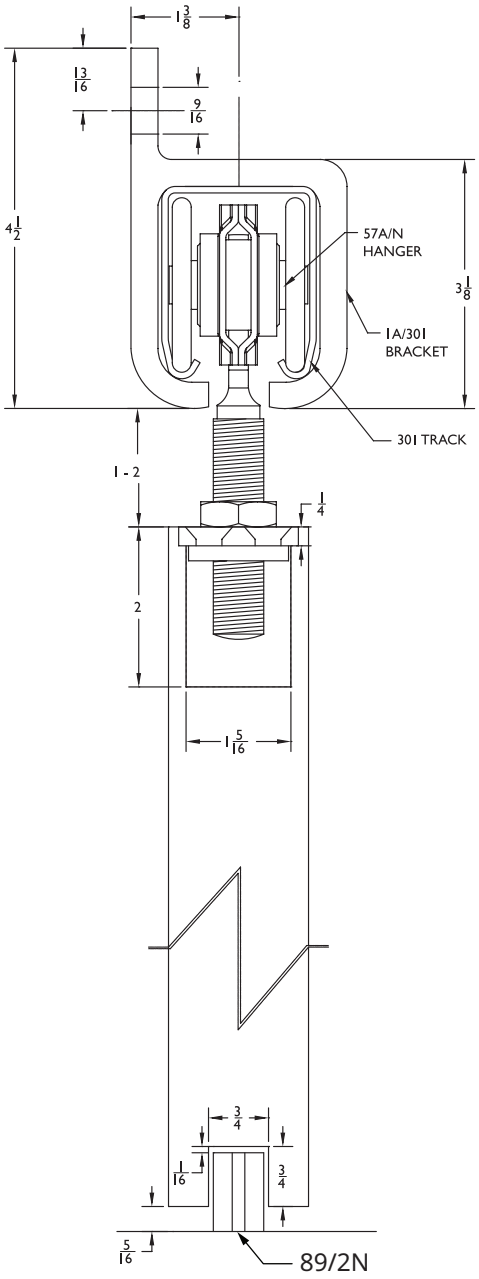

Configurations:
- Single
- Bi-parting

Installations:
- Side Wall Mount

Features:
- Side wall mount system
- Heavy duty zinc coated steel body
- Heavy ball bearing nylon wheels for smooth operation
- 800 lb. panel capacity
- Galvanized steel track 301
- 2 year warranty

H800S-SW Kits Include:

1 ea **301** Galvanized Steel Track
– **1A/301** Aluminum Alloy Side Wall Mount Track Brackets (One at each end and no more than three feet in between)
2 ea **1A/301/EC** Aluminum Alloy End Caps
2 ea **57A/N** Zinc Coated Steel Body, Nylon Wheels, and Pendant Bolt Hangers
2 ea **HH3/301** Galvanized Steel In-Track Stops
1 ea **89/2N** Gray Nylon Mortise Guide

Standard Kit Sizes			
PART NUMBER	MATERIAL	TRACK LENGTH	DOOR WIDTH
H800S-SW/6	Steel	72"	36"
H800S-SW/10	Steel	120"	60"
H800S-SW/12	Steel	144"	72"

Options:

Bottom Channel	**94A**
Roller Guide	**106R/94**
Mortise Guides	**102N**
Side Wall Mortise Guides	**102WN** (nylon) and **102WA** (steel)
Joining Bracket	**1AX/301**
Stainless Steel Flush Bolt	**FB150SS**
Stainless Steel Flush Pull	**503SF**

Copyright © 2015-2025, ASSA ABLOY Accessories and Door Controls Group, Inc., an ASSA ABLOY Group company. All rights reserved. Reproduction in whole or in part without the express written permission of ASSA ABLOY Accessories and Door Controls Group, Inc. is prohibited.

H1100A-OH SERIES

For Sliding Panels up to 1100 lbs.
Manufactured by P.C. Henderson

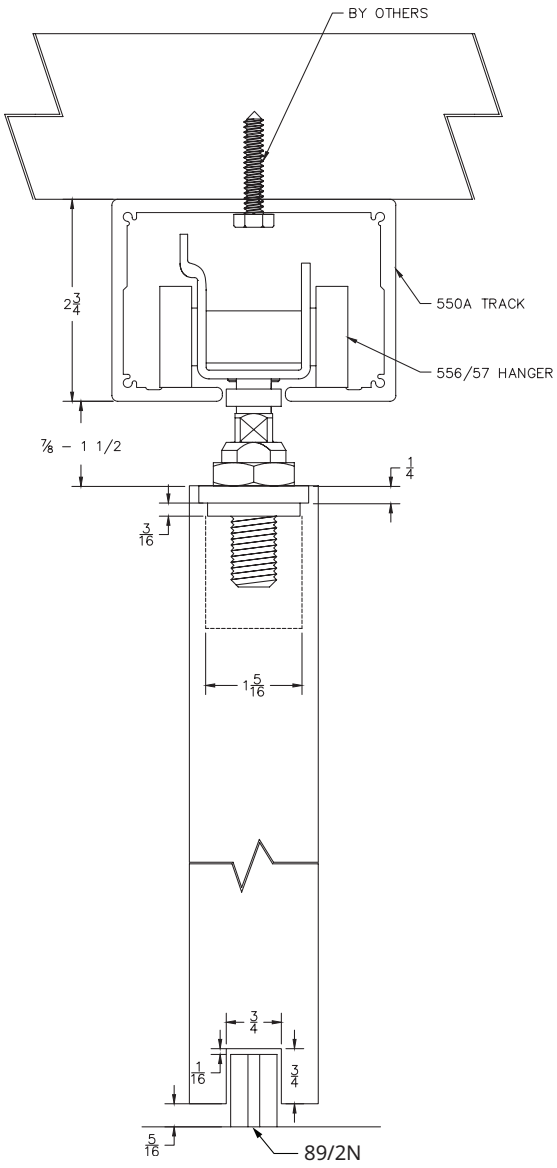

Ideally suited for large doors that require high performance and an attractive finish.
Typical applications are hotels, conference centers, shop-fronts and showrooms.

Configurations:
- Single
- Bi-parting

Installations:
- Overhead Mount

Features:
- For top hung wood and metal doors
- Heavy duty black painted steel body
- Ball bearing steel wheels
- 1100 lb. panel capacity
- Mill finished aluminum track 550A
- 2 year warranty

H1100A-OH Kits Include:

1 ea **550A** Mill Finished Aluminum Track
2 ea **556/57** Painted Black Steel Body - Zinc Coated Steel Wheels and Pendant Bolt Hangers
2 ea **HH3/301** Galvanized Steel In-Track Stops
1 ea **89/2N** Gray Nylon Mortise Guide

Standard Kit Sizes			
PART NUMBER	MATERIAL	TRACK LENGTH	DOOR WIDTH
H1100A-OH/6	Aluminum	72"	36"
H1100A-OH/8	Aluminum	96"	48"
H1100A-OH/10	Aluminum	120"	60"
H1100A-OH/12	Aluminum	144"	72"
H1100A-OH/16	Aluminum	197"	98"

Options:

Bottom Channel	**94A**
Roller Guide	**106R/94**
Stainless Steel Flush Bolt	**FB150SS**
Stainless Steel Flush Pull	**503SF**

Copyright © 2015-2025, ASSA ABLOY Accessories and Door Controls Group, Inc., an ASSA ABLOY Group company. All rights reserved.
Reproduction in whole or in part without the express written permission of ASSA ABLOY Accessories and Door Controls Group, Inc. is prohibited.

PEMKO
ASSA ABLOY
Experience a safer and more open world

H1100A-SW SERIES

For Sliding Panels up to 1100 lbs.
Manufactured by P.C. Henderson

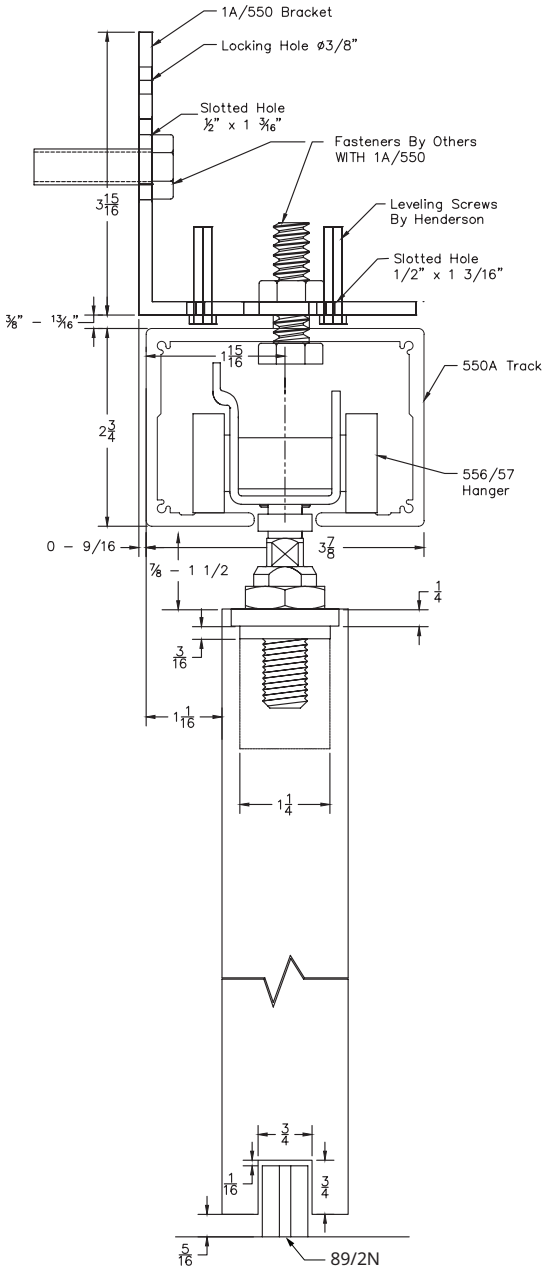

Ideally suited for large doors that require high performance and an attractive finish.
Typical applications are hotels, conference centers, shop-fronts and showrooms.

Configurations:
- Single
- Bi-parting

Installations:
- Side Wall Mount

Features:
- Heavy duty black painted steel body ball bearing wheels
- 1100 lb. panel capacity
- Mill finished aluminum track 550A
- 2 year warranty

H1100A-SW Kits Include:

1 ea **550A** Mill Finished Aluminum Track
– **1A/550** Aluminum Alloy Side Wall Track Bracket
Fastners not included with IA/550. (One at each end and no more than three feet in between)
2 ea **556/57** Painted Black Steel Body - Zinc Coated Steel Wheels and Pendant Bolt Hangers
2 ea **HH3/301** Galvanized Steel In-Track Stops
1 ea **89/2N** Gray Nylon Mortise Guide

Standard Kit Sizes			
PART NUMBER	MATERIAL	TRACK LENGTH	DOOR WIDTH
H1100A-SW/6	Aluminum	72"	36"
H1100A-SW/8	Aluminum	96"	48"
H1100A-SW/10	Aluminum	120"	60"
H1100A-SW/12	Aluminum	144"	72"
H1100A-SW/16	Aluminum	197"	98"

Options:

Bottom Channel Roller Guide	**94A** **106R/94**
Stainless Steel Flush Bolt	**FB150SS**
Stainless Steel Flush Pull	**503SF**

PEMKO
ASSA ABLOY
Experience a safer and more open world

800-824-3018 | www.pemko.com
Check the web site for the up-to-date catalog

Copyright © 2015-2025, ASSA ABLOY Accessories and Door Controls Group, Inc., an ASSA ABLOY Group company. All rights reserved. Reproduction in whole or in part without the express written permission of ASSA ABLOY Accessories and Door Controls Group, Inc. is prohibited.

POCKET FRAME KIT

For Sliding Panels up to 200 lbs.



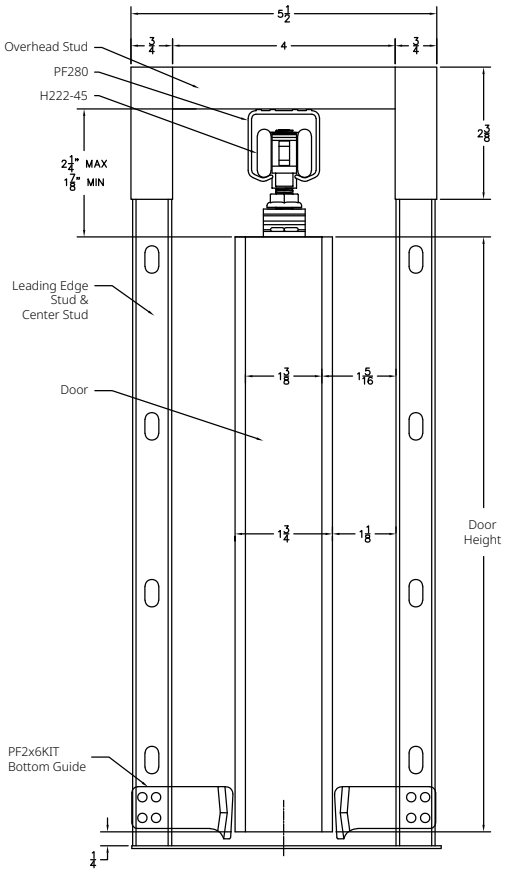

NOTE: ¾" plywood can be installed to the studs in the pocket to add strength and rigidity to pocket door walls.

Rough Frame Opening Dimensions:
2 x Door Width +1" and Door Height + 5"

Features:

- Heavy duty hardware supports doors upto 200 lbs.
- Available soft-close option for doors up to 200 lbs
- Standard kit is for 1 3/8" and 1 3/4" doors
- For standard 3 1/2", 5 1/2" wood studs and 6" metal studs
- Chrome plated steel hangers are corrosion resistant and no maintenance is required
- Service-friendly design
- 5 year warranty
- Meets ADA push force requirements
- ANSI/BHMA A156.14 Grade 1 Certifiied (Non-Soft Close Model)

Pocket Frame Kit Includes:

1 ea Header Track Assembly
4 ea **PFSS_** Galvanized Steel Studs
2 ea **PFHB-1** and **PFHB-2/PFHB-3** Pre-Mounted Header Brackets
2 ea **H222R1** Hangers
2 ea **PFFC-SS_** Floor Cleats
1 ea **PFBS** Pocket Frame Bumper Stop
2 ea **Bottom Guide**
PFBG-8 Bottom Guide for 1 3/8" doors
PFBG-4 Bottom Guide for 1 3/4" doors
PF2x6KIT Pocket Frame Bottom Guide for 2x6 and SP6 kit

Standard Kit Sizes			
2x4 Wood or Metal Stud Constructed Walls	2x6 Wood Stud Constructed Walls	2x6 Metal Stud Constructed Walls	Net Door Size/s (The Kits can be trimmed in field)
PF28200A7280	PF28200A7280-2X6	PF28200A7280-SP6	2'6" x 6'8" - 3'0" x 6'8"
PF28200A7284	PF28200A7284-2X6	PF28200A7284-SP6	2'6" x 7'0" - 3'0" x 7'0"
PF28200A9684	PF28200A9684-2X6	PF28200A9684-SP6	4'0" x 7'0"
PF28200A7296	PF28200A7296-2X6	PF28200A7296-SP6	2'6" x 8'0" - 3'0" x 8'0"
PF28200A9696	PF28200A9696-2X6	PF28200A9696-SP6	4'0" x 8'0"

Options:

PFCDKIT - Conversion Kit to achieve a bipart double door frame

PFKIT - Replacement Hardware Kit for Pemko Pocket Frame Kit for 1 3/8" and 1¾" thick doors. (Each contains 2-H222R1 Hangers, 1-PFBS Bumper Stop, 1-BG-4 Guide, 1-BG-8 Guide)

PF-SP6-KIT - Adapter kit for 2x6 Metal Stud constructed walls. Included with all 2x6 and SP6 kits. (Each contains 6 shims for header assembly, 3 PFFC-SS-SP6 floor cleats)

Soft Close available. See pages 256-258 for more information.

Copyright © 2015-2025, ASSA ABLOY Accessories and Door Controls Group, Inc., an ASSA ABLOY Group company. All rights reserved.
Reproduction in whole or in part without the express written permission of ASSA ABLOY Accessories and Door Controls Group, Inc. is prohibited.

PEMKO
ASSA ABLOY
Experience a safer and more open world

FOLDING 100 SERIES

For Folding Doors up to 100 lbs.
For Doors up to 24" Wide x 96" Tall
Manufactured by P.C. Henderson

280C Overhead Mounted

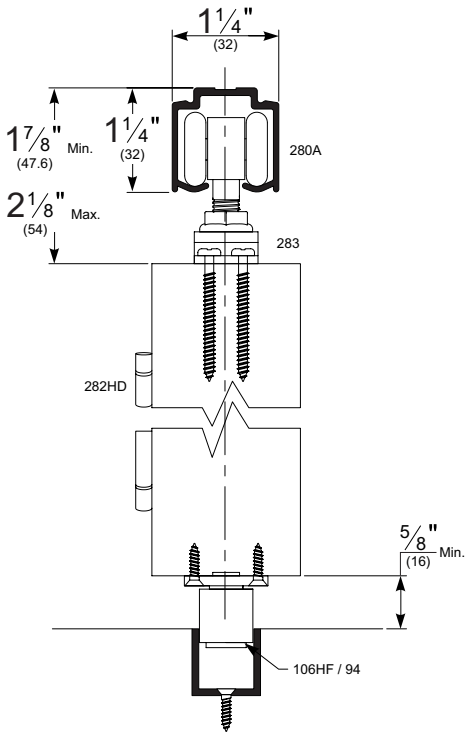

Features:

- For medium weight folding doors
- Two and four leaf kits are available
- 2 year warranty

Two Panel:

HF2/100A Kits Include:

1 ea **280C** Clear Anodized Track
1 ea **283** Hanger
1 ea **289T** Top Pivot
1 ea **289B** Bottom Pivot
3 ea **282HD26** Hinges
1 ea **106HF/94** Roller Guide
1 ea **94A** Aluminum Guide Channel
1 ea Adjusting Wrench and Mounting Hardware

Four Panel:

HF4/100A Kits Include:

1 ea **280C** Clear Anodized Track
2 ea **283** Hangers
2 ea **289T** Top Pivots
2 ea **289B** Bottom Pivots
6 ea **282HD26** Hinges
2 ea **106HF/94** Roller Guide
1 ea **94A** Aluminum Guide Channel
1 ea Adjusting Wrench and Mounting Hardware

Standard Kit Sizes			
PART NUMBER	MATERIAL	# OF PANELS	TRACK LENGTH
HF2/100A/2	Aluminum	2	24"
HF2/100A/2'6	Aluminum	2	30"
HF2/100A/3	Aluminum	2	36"
HF2/100A/4	Aluminum	2	48"
HF4/100A/4	Aluminum	4	48"
HF4/100A/5	Aluminum	4	60"
HF4/100A/6	Aluminum	4	72"
HF4/100A/8	Aluminum	4	96"

Options:

Mounting Bracket	**PC2815** available as 5 pack only, **PC2815** pack of 5 281 zinc plated side wall bracket. NOTE: Need one at each end and no more than 2 feet in-between. Fasteners included.
Track	**280D** dark bronze anodized aluminum

Note: Allow 1/4" clearance at pivot jambs and 1/8" in between hinged doors if hinges are mortised. Allow 3/16" between hinged doors if hinges are surface mounted. Allow 1/8" between doors meeting in the center of the opening on HF4 kits and allow 1/8" between wall and end panel on HF2 kits.

Copyright © 2015-2025, ASSA ABLOY Accessories and Door Controls Group, Inc., an ASSA ABLOY Group company. All rights reserved. Reproduction in whole or in part without the express written permission of ASSA ABLOY Accessories and Door Controls Group, Inc. is prohibited.

PACER INTERIOR END FOLD SERIES

For Folding Doors and Room Dividers up to 165 lbs.
For Doors up to 36" Wide x 106" Tall
Manufactured by P.C. Henderson



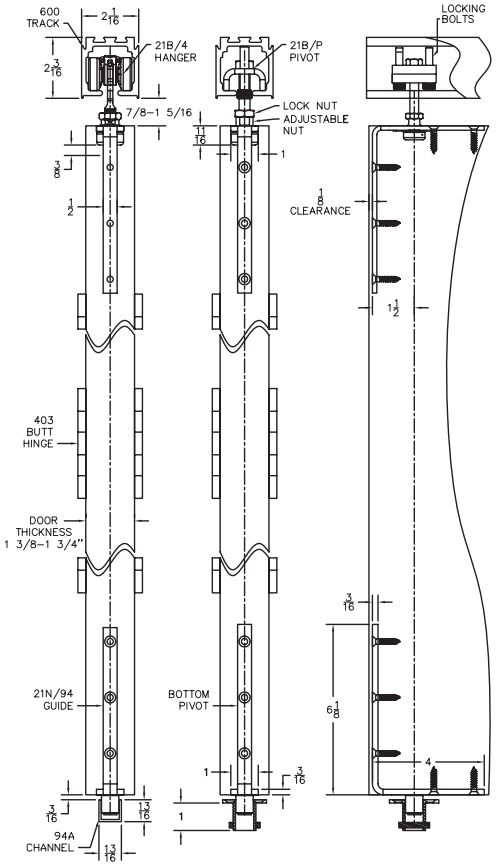

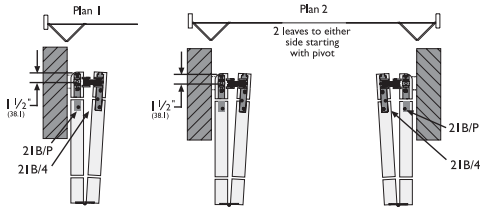

Features:

- For top-hung, medium weight, interior, partition doors
- Ideal in both residential and commercial applications requiring end folding doors
- 2 year warranty

Two Panel: plan 1

PIF2/165A Kits Include:

1 ea **600A** Mill Finished Aluminum Track
1 ea **21B/P** Top and Bottom Pivot Assembly
1 ea **21B/4** Nylon Body and Wheels, Zinc Coated Steel Pendant Bolt and Door Bracket Hanger
1 ea **21N/94** Nylon Roller Guide on Zinc Coated Steel Door Bracket Bottom Guide
4 ea **403/2** Aluminum Alloy Butt Hinges
1 ea **94A** Aluminum Guide Channel

Four Panel: plan 2

PIF4/165A Kits Include:

1 ea **600A** Mill Finished Aluminum Track
2 ea **21B/P** Top and Bottom Pivot Assembly
2 ea **21B/4** Nylon Body and Wheels, Zinc coated steel Pendant Bolt and Door Bracket Hanger
2 ea **21N/94** Nylon Roller Guide on Zinc Coated Steel Door Bracket Bottom Guide
8 ea **403/2** Aluminum Alloy Butt Hinges
1 ea **94A** Aluminum Guide Channel

Standard Kit Sizes			
PART NUMBER	MATERIAL	# OF PANELS	TRACK LENGTH
PIF2/165A/6	Aluminum	2	72"
PIF4/165A/6	Aluminum	4	72"
PIF4/165A/8	Aluminum	4	96"
PIF4/165A/12	Aluminum	4	2 @ 72"

Options:

Stainless Steel Flush Bolt **FB150SS**
Stainless Steel Flush Pull **503SF**

NOTE: Allow $^{3}/_{8}$" clearance at pivot jambs and $^{1}/_{8}$" in between hinged doors if hinges are mortised. Allow $^{7}/_{16}$" between hinged doors if hinges are surface mounted. Allow $^{1}/_{8}$" between doors meeting in the center of the opening on PIF4 kits and allow $^{1}/_{8}$" between wall and end panel on PIF2 kits.

Copyright © 2015-2025, ASSA ABLOY Accessories and Door Controls Group, Inc., an ASSA ABLOY Group company. All rights reserved.
Reproduction in whole or in part without the express written permission of ASSA ABLOY Accessories and Door Controls Group, Inc. is prohibited.

PEMKO
ASSA ABLOY
Experience a safer and more open world

HIDDEN SLIDING DOOR SYSTEM

Hide Slide™ Series for Wood Doors

For Sliding Panels up to 176 lbs.



Configurations:

- Single
- Bi-parting

Installations:

- Side Wall Mount

Features:

- Soft open and close
- Nylon wheels with steel ball bearings for smooth operation
- 176 lb. panel capacity
- Tested to ANSI/BHMA A156.14
- 5 year warranty

Hide Slide Kits Include:

1 ea	Aluminum Track	1 ea	Adjustable Top Roller
2 ea	Soft Close Devices	1 ea	Safety Cable
2 ea	Backup Hard Stops	2 ea	Bottom Rollers
2 ea	Cable Clamps	1 ea	Bottom Guide
2 ea	End Caps	1 ea	Bottom Guide Channel Insert
1 ea	Flush Pull (HIDESLIDE/PULL-BSP)		

STANDARD KIT SIZE			
Part Number	Track Length	Door Width	Opening Width
HIDESLIDE/48	48"	32" - 48"	24" - 46"

Notes: Door width determined by overlap configurations (see images below)
Door height determined using a 3/8" undercut and 3" top overlap

Wall to Door Clearances

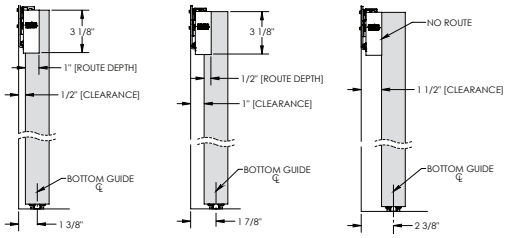

Note: Depth of top route determines clearance between wall and door.

Options:

Flush Pull	**503SF** (For Rockwood options, click here)
Mill Aluminum Bottom Track	**18/1A** use in carpeted applications. Order 2" wide by length with beveled edges. Consider 18/1A height of 1/8" in door height calculations.
Sliding Door Lock	**SDL__ / SDL__-ADA**
Automatic Door Slider	**PSLIDE** (See product page for more details)

Overlap Configurations

Note: Please refer to the ordering guide for the exact door size needed.

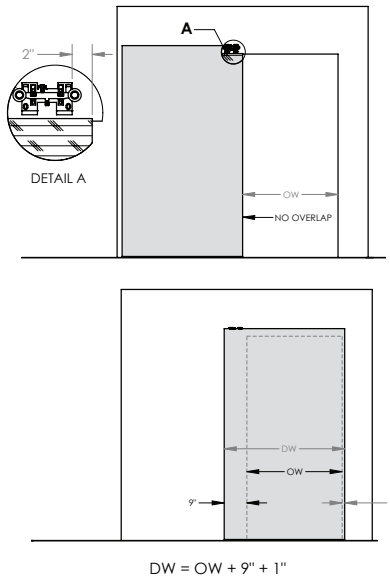

DW = OW + 9" + 1"

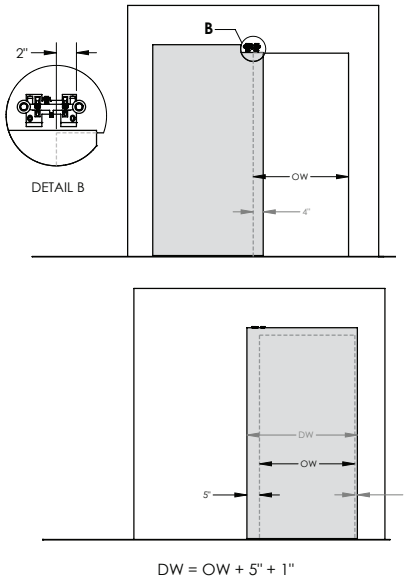

DW = OW + 5" + 1"

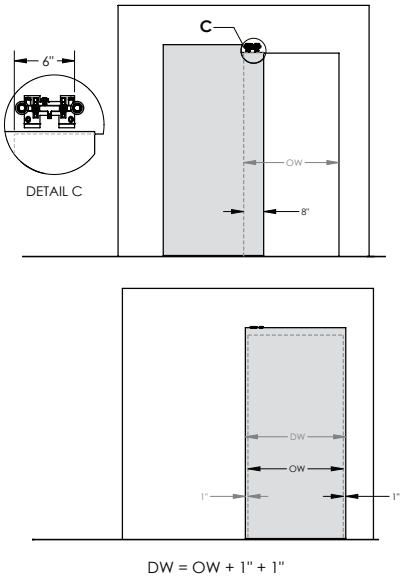

DW = OW + 1" + 1"

PEMKO
ASSA ABLOY
Experience a safer and more open world

800-824-3018 | www.pemko.com
Check the web site for the up-to-date catalog

Copyright © 2015-2025, ASSA ABLOY Accessories and Door Controls Group, Inc., an ASSA ABLOY Group company. All rights reserved.
Reproduction in whole or in part without the express written permission of ASSA ABLOY Accessories and Door Controls Group, Inc. is prohibited.

FLEXIROL INTERIOR END FOLD SERIES

For Folding Doors and Room Dividers up to 275 lbs.
For Doors up to 48" Wide x 177" Tall
Manufactured by P.C. Henderson



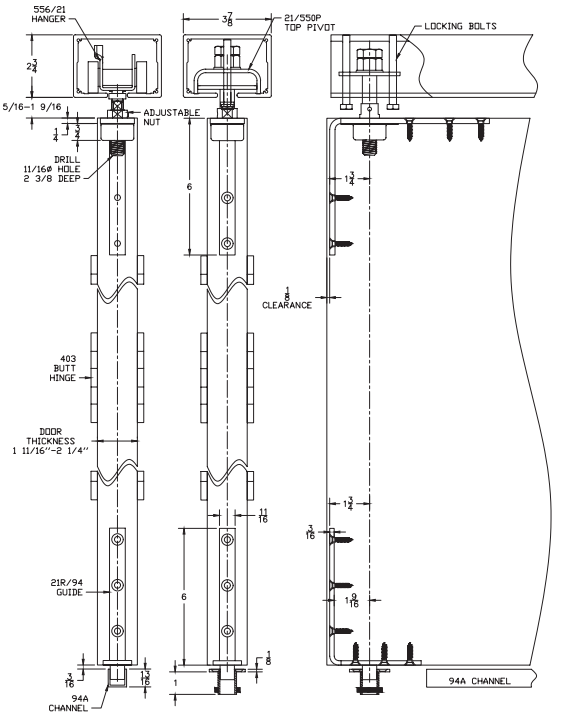

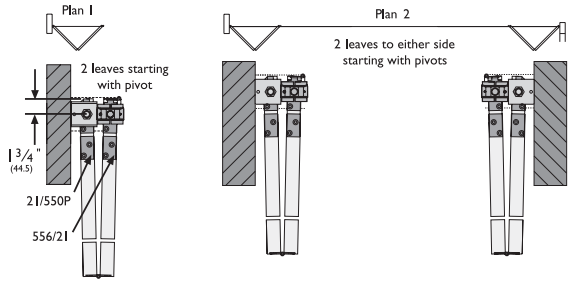

Features:

- For top-hung, heavy weight, interior, partition doors.
- Specifically designed for commercial applications requiring end folding doors
- 2 year warranty.

Two Panel: plan 1

FIF2/275A Kits Include:

1 ea **550A** Mill Finished Aluminum Track
1 ea **21/550/P** Top and Bottom Pivot Assembly
1 ea **556/21** Zinc Coated Steel Wheels, Pendant Bolt, Body, and Door Bracket
1 ea **21R/94** Bottom Guide
4 ea **403/2** Aluminum Alloy Butt Hinges
1 ea **94A** Aluminum Guide Channel

Four Panel: plan 2

FIF4/275A Kits Include:

1 ea **550A** Mill Finished Aluminum Track
2 ea **21/550/P** Top and Bottom Pivot Assembly
2 ea **556/21** Zinc Coated Steel Wheels, Pendant Bolt, Body, and Door Bracket
2 ea **21R/94** Bottom Guide
8 ea **403/2** Aluminum Alloy Butt Hinges
1 ea **94A** Aluminum Guide Channel

Standard Kit Sizes			
Part Number	Material	# of Panels	Track Length
FIF2/275A/8	Aluminum	2	96"
FIF4/275A/8	Aluminum	4	96"
FIF4/275A/12	Aluminum	4	2 @ 72"
FIF4/275A/16	Aluminum	4	2 @ 96"

Options:

Stainless Steel Flush Bolt **FB150SS**
Stainless Steel Flush Pull **503SF**

NOTE: Allow 3/8" clearance at pivot jambs and 1/8" in between hinged doors if hinges are mortised. Allow 7/16" between hinged doors if hinges are surface mounted. Allow 1/8" between doors meeting in the center of the opening on FIF4 kits and allow 1/8" between wall and end panel on FIF2 kits.

Copyright © 2015-2025, ASSA ABLOY Accessories and Door Controls Group, Inc., an ASSA ABLOY Group company. All rights reserved.
Reproduction in whole or in part without the express written permission of ASSA ABLOY Accessories and Door Controls Group, Inc. is prohibited.

PEMKO
ASSA ABLOY
Experience a safer and more open world

STAINLESS STEEL SLIDING TRACK HARDWARE SYSTEM

W60 SERIES FOR WOOD DOORS

For Sliding Panels up to 176 lbs.
Order Form Required

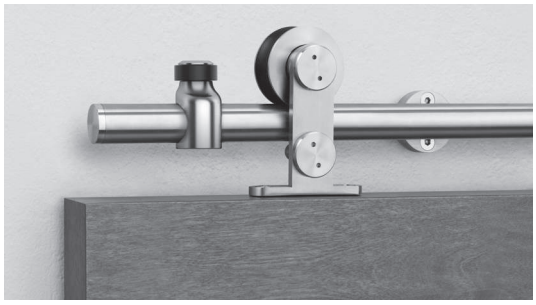

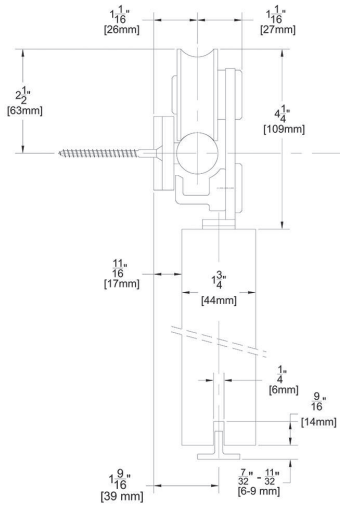

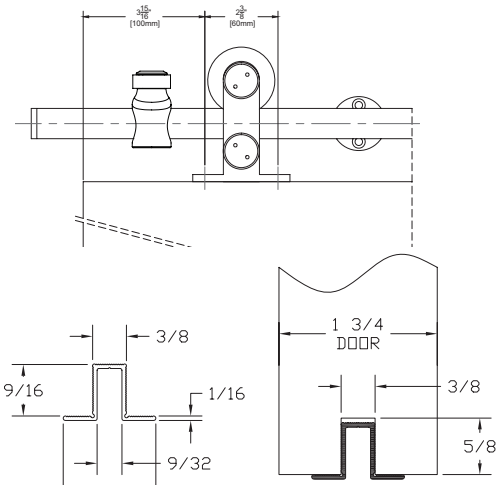

NOTE: Alternate route dimension when using optional EPD3BL

Configurations:
- Single
- Bi-parting

Installations:
- Side Wall Mount (only)

Features:
- Made of 304 stainless steel
- Nylon coated stainless steel wheel for smooth operation
- 176 lb. panel capacity
- 5 year warranty
- Meets ADA push force requirements

Finishes:
- Brushed Stainless Steel (W60)
- Black Powder Coated Stainless Steel (W60D)

W60 Kits Include:

1 ea **BAR/_** Stainless Steel Track
– **BRACKET2** Stainless Steel Wall Brackets
2 ea **62** Stainless Steel Hangers
1 ea **102SS-KIT** Stainless Steel Guide
2 ea **STOP3** Stainless Steel Stops Mounting Hardware
2 ea **SC-TRG** Soft Close Activators

NOTE: If ordering individual parts in the optional Black Powder Coat finish, be sure to include a prefix "D" for Black Powder Coat

Standard Kit Sizes

PART NUMBER	MATERIAL	TRACK LENGTH	DOOR WIDTH
W60/6	304 Stainless Steel	78 3/4"	36"
W60/8	304 Stainless Steel	98 7/16"	48"
W60D/6	Black Powder Coated 304 Stainless Steel	78 3/4"	36"
W60D/8	Black Powder Coated 304 Stainless Steel	98 7/16"	48"

Custom lengths are available.
Please use the order form available on the Pemko website..

Options:

Hardware Pack (One Door)	**W60_H/PACK**
Mortise Guides	**102N**
Polypropylene Guide Rail	**EPD3BL** For Use With 102N and 102SS-KIT
5/8" Spacer	**BLD-SPACER-58** Pack of 5 5/8" Spacer Recommended for use with 5/8" Gypsum Board When Mounting Track Directly to Gypsum Board
Bottom Guide	**138N-SG1KIT** Surface Mounted Bottom Guide for 1 3/8" door panels

PEMKO
ASSA ABLOY
Experience a safer and more open world

800-824-3018 | www.pemko.com
Check the web site for the up-to-date catalog

Copyright © 2015-2025, ASSA ABLOY Accessories and Door Controls Group, Inc., an ASSA ABLOY Group company. All rights reserved. Reproduction in whole or in part without the express written permission of ASSA ABLOY Accessories and Door Controls Group, Inc. is prohibited.

STAINLESS STEEL SLIDING TRACK HARDWARE SYSTEM WITH CUSHION STOP

CS-W60 SERIES FOR WOOD DOORS

For Sliding Panels up to 176 lbs.
Order Form Required

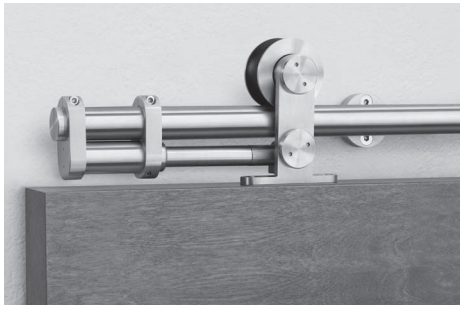

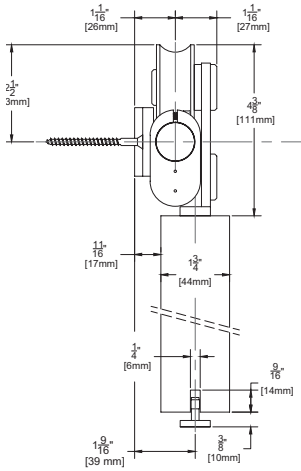

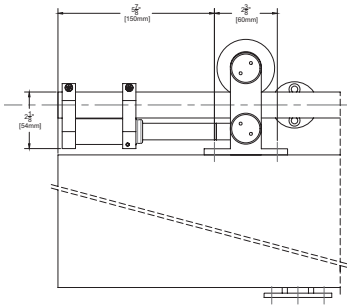

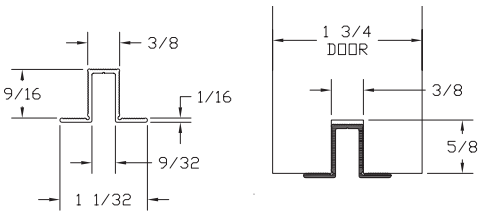

NOTE: Alternate route dimension when using optional EPD3BL

Configurations:

- Single
- Biparting (cushion stops recommended only when opening the door with hard stops in the middle where doors meet)

Installations:

- Side Wall Mount (only)

Features:

- Made of 304 stainless steel
- Prevents door racking and bounce back
- Extends life of upper hardware
- Nylon coated stainless steel wheel for smooth operation
- 176 lb. panel capacity
- 5 year warranty
- Meets ADA push force requirements

Finishes:

- Brushed Stainless Steel (CS-W60)
- Black Powder Coated Stainless Steel (CS-W60D)

CS-W60 Kits Include:

1 ea	**BAR/_** Stainless Steel Track
–	**BRACKET2** Stainless Steel Wall Brackets
2 ea	**62** Stainless Steel Hangers
1 ea	**102SS-KIT** Stainless Steel Guide
1 pr	**CS-001_** Stainless Steel Cushion Stops

NOTE: If ordering individual parts in the optional black powder coat, be sure to include a suffix 'D'.

Standard Kit Sizes

PART NUMBER	MATERIAL	TRACK LENGTH	DOOR WIDTH
CS-W60/6	304 Stainless Steel	78 3/4"	36"
CS-W60/8	304 Stainless Steel	98 7/16"	48"
CS-W60D/6	Black Powder Coated 304 Stainless Steel	78 3/4"	36"
CS-W60D/8	Black Powder Coated 304 Stainless Steel	98 7/16"	48"

Custom lengths are available.
Please use the order form available on the Pemko website.

Options:

Mortise Guides	**102N**
Polypropylene Guide Rail	**EPD3BL For Use With 102N and 102SS-KIT**
Cushion Stops	**CS-001SS, CS-001D** (sold as pair) For use with existing openings that have W60 hardware installed
5/8" Spacer	**BLD-SPACER-58** Pack of 5 5/8" Spacer Recommended for use with 5/8" Gypsum Board When Mounting Track Directly to Gypsum Board
Bottom Guide	**138N-SG1KIT** Surface Mounted Bottom Guide for 1 3/8" door panels

Copyright © 2015-2025, ASSA ABLOY Accessories and Door Controls Group, Inc., an ASSA ABLOY Group company. All rights reserved.
Reproduction in whole or in part without the express written permission of ASSA ABLOY Accessories and Door Controls Group, Inc. is prohibited.

PEMKO
ASSA ABLOY
Experience a safer and more open world

SOFT CLOSE STAINLESS STEEL SLIDING TRACK HARDWARE SYSTEM

SFT-W60 SERIES FOR WOOD DOORS

For Sliding Panels up to 176 lbs.
Order Form Required

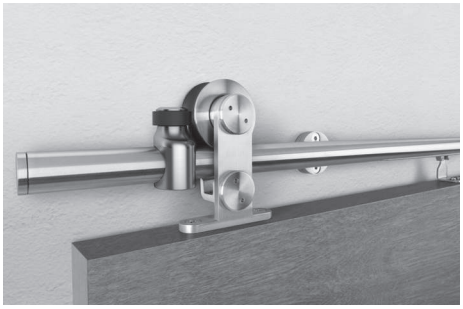

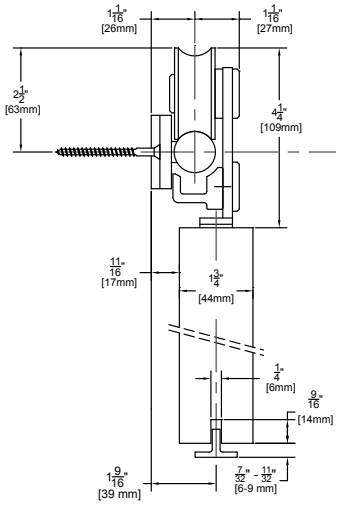

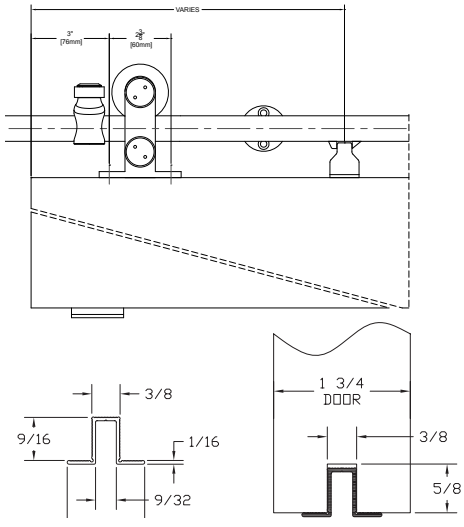

NOTE: Alternate route dimension when using optional EPD3BL

Configurations:
- Single

Installations:
- Side Wall Mount (only)

Features:
- Made of 304 stainless steel
- Soft Close
- Nylon coated stainless steel wheel for smooth operation
- 176 lb. panel capacity
- 5 year warranty
- Meets ADA push force requirements

Finishes:
- Brushed Stainless Steel

SFT-W60 Kits Include:

1 ea **SC-BAR/_** Stainless Steel Track with Two Soft Close Devices
– **BRACKET2** Stainless Steel Wall Brackets
2 ea **SC-62** Stainless Steel Hangers
1 ea **102SS-KIT** Stainless Steel Guide
2 ea **STOP3** Stainless Steel Stops Mounting Hardware
2 ea **SC-TRG** Soft Close Activators

Standard Kit Sizes			
PART NUMBER	MATERIAL	TRACK LENGTH	DOOR WIDTH
SFT-W60/6	304 Stainless Steel	78 3/4"	36"
SFT-W60/8	304 Stainless Steel	98 7/16"	48"

Custom lengths are not available.

Options:

Hardware Pack (One Door)	**W60H/PACK**
Mortise Guides	**102N**
Polypropylene Guide Rail	**EPD3BL** For Use With 102N and 102SS-KIT
5/8" Spacer	**BLD-SPACER-58** Pack of 5 5/8" Spacer Recommended for use with 5/8" Gypsum Board When Mounting Track Directly to Gypsum Board
Bottom Guide	**138N-SG1KIT** Surface Mounted Bottom Guide for 1 3/8" door panels

PEMKO
ASSA ABLOY
Experience a safer and more open world

800-824-3018 | www.pemko.com
Check the web site for the up-to-date catalog

Copyright © 2015-2025, ASSA ABLOY Accessories and Door Controls Group, Inc., an ASSA ABLOY Group company. All rights reserved. Reproduction in whole or in part without the express written permission of ASSA ABLOY Accessories and Door Controls Group, Inc. is prohibited.

STAINLESS STEEL SLIDING TRACK HARDWARE SYSTEM

W70 SERIES FOR WOOD DOORS

For Sliding Panels up to 240 lbs.
Order Form Required



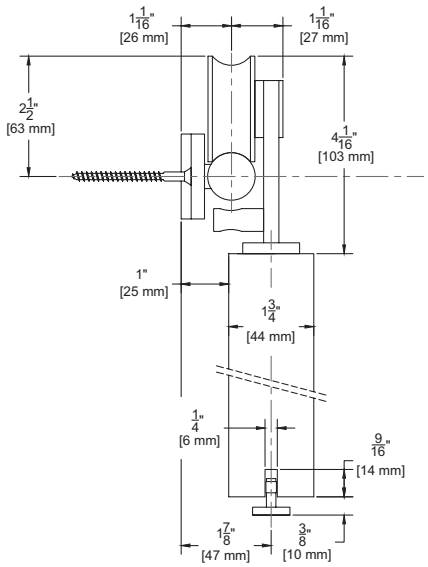

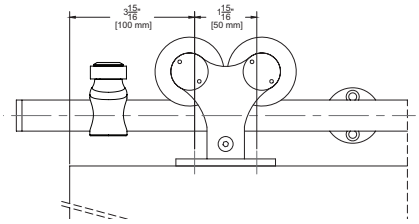

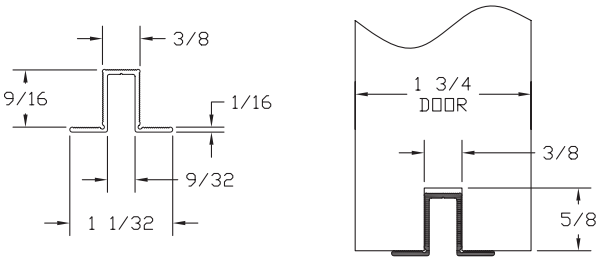

NOTE: Alternate route dimension when using optional EPD3BL

Configurations:
- Single
- Bi-parting

Installations:
- Side Wall Mount (only)

Features:
- Made of 304 stainless steel
- Nylon coated stainless steel wheel for smooth operation
- 240 lb. panel capacity
- 5 year warranty
- Meets ADA push force requirements

Finishes:
- Brushed Stainless Steel (W70)

W70 Kits Include:

1 ea	**BAR/_** Stainless Steel Track
–	**BRACKET2** Stainless Steel Wall Brackets
2 ea	**WD72** Stainless Steel Hangers
1 ea	**102SS-KIT** Stainless Steel Guide
2 ea	**STOP3** Stainless Steel Stops Mounting Hardware

Standard Kit Sizes			
PART NUMBER	MATERIAL	TRACK LENGTH	DOOR WIDTH
W70/6	304 Stainless Steel	78 3/4"	36"
W70/8	304 Stainless Steel	98 7/16"	48"

Custom lengths are available.
Please use the order form available on the Pemko website.

Options:

Hardware Pack (One Door)	**W70_H/PACK**
Mortise Guides	**102N**
Polypropylene Guide Rail	**EPD3BL** For Use With 102N and 102SS-KIT
5/8" Spacer	**BLD-SPACER-58** Pack of 5 5/8" Spacer Recommended for use with 5/8" Gypsum Board When Mounting Track Directly to Gypsum Board
Bottom Guide	**138N-SG1KIT** Surface Mounted Bottom Guide for 1 3/8" door panels

Copyright © 2015-2025, ASSA ABLOY Accessories and Door Controls Group, Inc., an ASSA ABLOY Group company. All rights reserved.
Reproduction in whole or in part without the express written permission of ASSA ABLOY Accessories and Door Controls Group, Inc. is prohibited.

PEMKO
ASSA ABLOY
Experience a safer and more open world

STAINLESS STEEL SLIDING TRACK HARDWARE SYSTEM

W80 SERIES FOR WOOD DOORS

For Sliding Panels up to 176 lbs.
Order Form Required

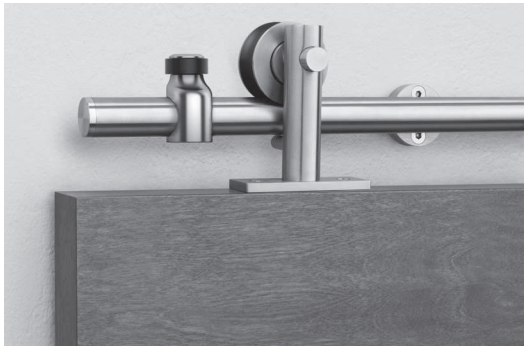

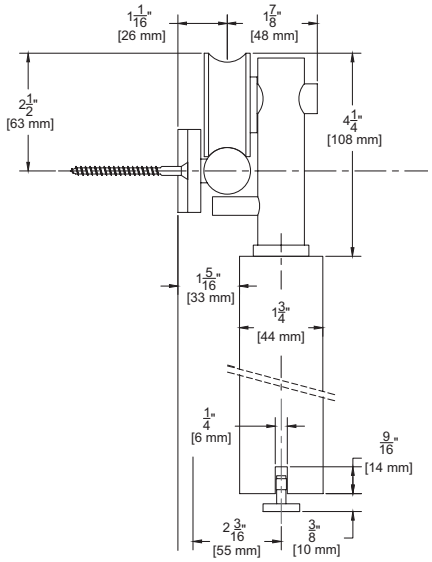

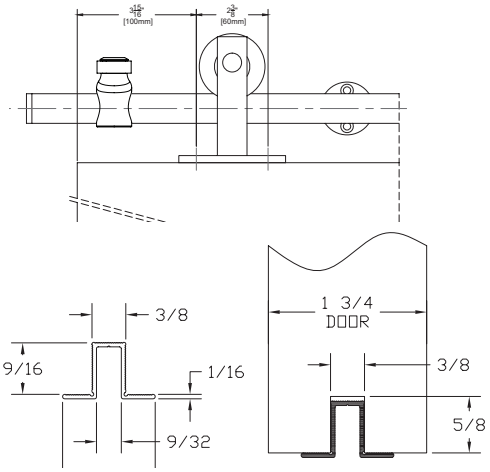

NOTE: Alternate route dimension when using optional EPD3BL

Configurations:
- Single
- Bi-parting

Installations:
- Side Wall Mount (only)

Features:
- Made of 304 stainless steel
- Nylon coated stainless steel wheel for smooth operation
- 176 lb. panel capacity
- 5 year warranty
- Meets ADA push force requirements

Finishes:
- Brushed Stainless Steel (W80)

W80 Kits Include:

1 ea	**BAR/_** Stainless Steel Track
–	**BRACKET2** Stainless Steel Wall Brackets
2 ea	**WD82** Stainless Steel Hangers
1 ea	**102SS-KIT** Stainless Steel Guide
2 ea	**STOP3** Stainless Steel Stops Mounting Hardware

Standard Kit Sizes			
PART NUMBER	MATERIAL	TRACK LENGTH	DOOR WIDTH
W80/6	304 Stainless Steel	78 3/4"	36"
W80/8	304 Stainless Steel	98 7/16"	48"

Custom lengths are available.
Please use the order form available on the Pemko website.

Options:

Hardware Pack (One Door)	**W80_H/PACK**
Mortise Guides	**102N**
Polypropylene Guide Rail	**EPD3BL** For Use With 102N and 102SS-KIT
5/8" Spacer	**BLD-SPACER-58** Pack of 5 5/8" Spacer Recommended for use with 5/8" Gypsum Board When Mounting Track Directly to Gypsum Board
Bottom Guide	138N-SG1KIT Surface Mounted Bottom Guide for 1 3/8" door panels

PEMKO
ASSA ABLOY
Experience a safer and more open world

Copyright © 2015-2025, ASSA ABLOY Accessories and Door Controls Group, Inc., an ASSA ABLOY Group company. All rights reserved. Reproduction in whole or in part without the express written permission of ASSA ABLOY Accessories and Door Controls Group, Inc. is prohibited.

STAINLESS STEEL SLIDING TRACK HARDWARE SYSTEM

W100 SERIES FOR WOOD DOORS

For Sliding Panels up to 198 lbs.
Order Form Required



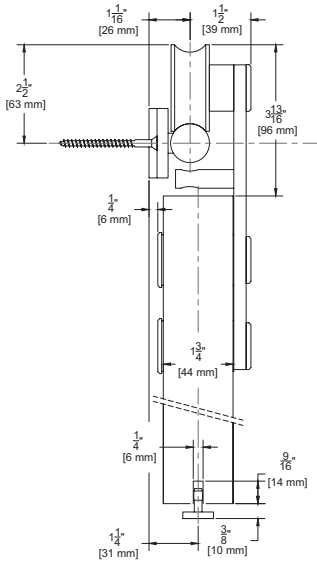

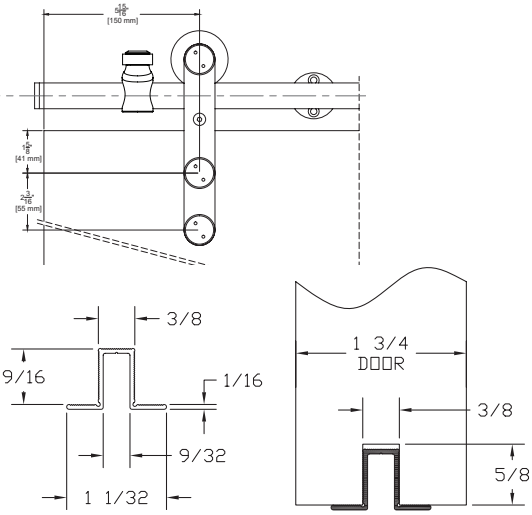

NOTE: Alternate route dimension when using optional EPD3BL

Configurations:
- Single
- Bi-parting

Installations:
- Side Wall Mount (only)

Features:
- Made of 304 stainless steel
- Nylon coated stainless steel wheel for smooth operation
- 198 lb. panel capacity
- 5 year warranty
- Meets ADA push force requirements

Finishes:
- Brushed Stainless Steel (W100)
- Black Powder Coated Stainless Steel (W100D)

W100 Kits Include:

1 ea	**BAR/_** Stainless Steel Track
–	**BRACKET2** Stainless Steel Wall Brackets
2 ea	**SC-111** Stainless Steel Hangers
1 ea	**102SS-KIT** Stainless Steel Guide
2 ea	**STOP3** Stainless Steel Stops Mounting Hardware
2 ea	**SC-TRG** Soft Close Activators

NOTE: If ordering individual parts in the optional Black Powder Coat finish, be sure to include a prefix "D" for Black Powder Coat

Standard Kit Sizes

PART NUMBER	MATERIAL	TRACK LENGTH	DOOR WIDTH
W100/6	304 Stainless Steel	78 3/4"	36"
W100/8	304 Stainless Steel	98 7/16"	48"
W100D/6	Black Powder Coated 304 Stainless Steel	78 3/4"	36"
W100D/8	Black Powder Coated 304 Stainless Steel	98 7/16"	48"

Custom lengths are available.
Please use the order form available on the Pemko website.

Options:

Hardware Pack (One Door)	**W100_H/PACK**
Mortise Guides	**102N**
Polypropylene Guide Rail	**EPD3BL** For Use With 102N and 102SS-KIT
5/8" Spacer	**BLD-SPACER-58** Pack of 5 5/8" Spacer Recommended for use with 5/8" Gypsum Board When Mounting Track Directly to Gypsum Board
Bottom Guide	**138N-SG1KIT** Surface Mounted Bottom Guide for 1 3/8" door panels

Copyright © 2015-2025, ASSA ABLOY Accessories and Door Controls Group, Inc., an ASSA ABLOY Group company. All rights reserved.
Reproduction in whole or in part without the express written permission of ASSA ABLOY Accessories and Door Controls Group, Inc. is prohibited.

PEMKO
ASSA ABLOY
Experience a safer and more open world

STAINLESS STEEL SLIDING TRACK HARDWARE SYSTEM WITH CUSHION STOP

CS-W100 SERIES FOR WOOD DOORS

For Sliding Panels up to 198 lbs.
Order Form Required

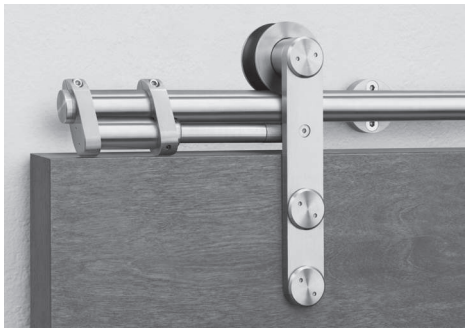

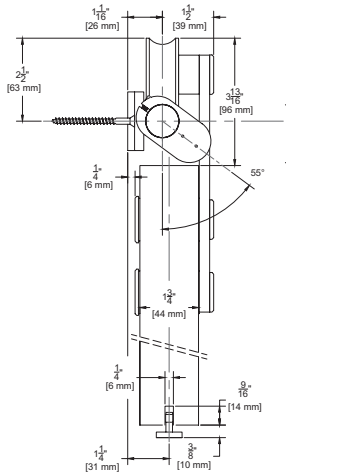

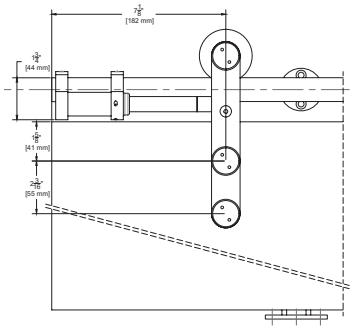

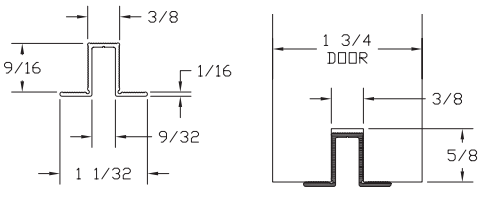

NOTE: Alternate route dimension when using optional EPD3BL

Configurations:

- Single
- Biparting (cushion stops recommended only when opening the door with hard stops in the middle where doors meet)

Installations:

- Side Wall Mount (only)

Features:

- Made of 304 stainless steel
- Prevents door racking and bounce back
- Extends life of upper hardware
- Nylon coated stainless steel wheel for smooth operation
- 198 lb. panel capacity
- 5 year warranty
- Meets ADA push force requirements

Finishes:

- Brushed Stainless Steel (CS-W100)
- Black Powder Coated Stainless Steel (CS-W100D)

CS-W100 Kits Include:

1 ea **BAR/_** Stainless Steel Track
– **BRACKET2** Stainless Steel Wall Brackets
2 ea **WD111** Stainless Steel Hangers
1 ea **102SS-KIT** Stainless Steel Guide
1 pr **CS-003_** Stainless Steel Cushion Stops

NOTE: If ordering individual parts in the optional black powder coat, be sure to include a suffix 'D'.

Standard Kit Sizes

PART NUMBER	MATERIAL	TRACK LENGTH	DOOR WIDTH
CS-W100/6	304 Stainless Steel	78 3/4"	36"
CS-W100/8	304 Stainless Steel	98 7/16"	48"
CS-W100D/6	Black Powder Coated 304 Stainless Steel	78 3/4"	36"
CS-W100D/8	Black Powder Coated 304 Stainless Steel	98 7/16"	48"

Custom lengths are available.
Please use the order form available on the Pemko website.

Options:

Mortise Guides	**102N**
Polypropylene Guide Rail	**EPD3BL For Use With 102N and 102SS-KIT**
Cushion Stops	**CS-003SS, CS-003D** (sold as pair) For use with existing openings that have W100 hardware installed
5/8" Spacer	**BLD-SPACER-58** Pack of 5 5/8" Spacer Recommended for use with 5/8" Gypsum Board When Mounting Track Directly to Gypsum Board
Bottom Guide	**138N-SG1KIT** Surface Mounted Bottom Guide for 1 3/8" door panels

PEMKO
ASSA ABLOY
Experience a safer and more open world

800-824-3018 | www.pemko.com
Check the web site for the up-to-date catalog

Copyright © 2015-2025, ASSA ABLOY Accessories and Door Controls Group, Inc., an ASSA ABLOY Group company. All rights reserved. Reproduction in whole or in part without the express written permission of ASSA ABLOY Accessories and Door Controls Group, Inc. is prohibited.

SOFT CLOSE STAINLESS STEEL SLIDING TRACK HARDWARE SYSTEM

SFT-W100 SERIES FOR WOOD DOORS

For Sliding Panels up to 198 lbs.
Order Form Required



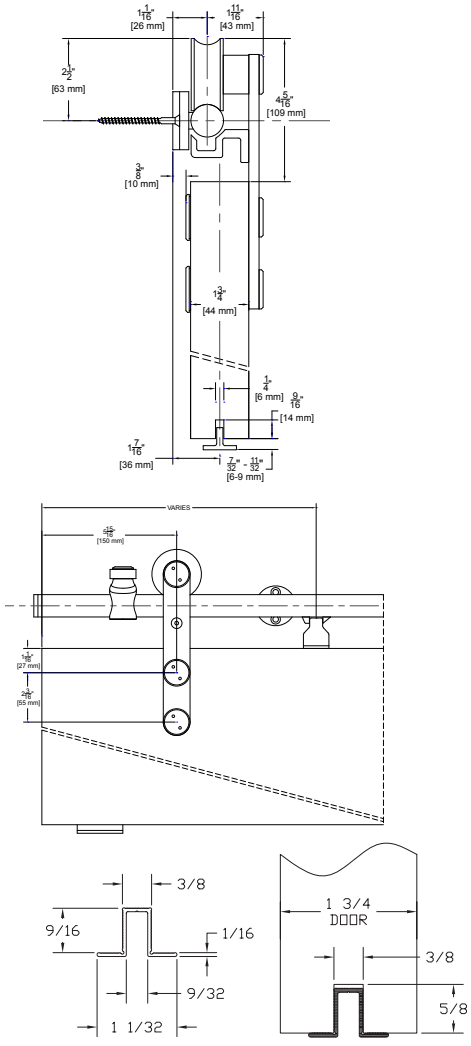

NOTE: Alternate route dimension when using optional EPD3BL

Configurations:
- Single

Installations:
- Side Wall Mount (only)

Features:
- Made of 304 stainless steel
- Soft Close
- Nylon coated stainless steel wheel for smooth operation
- 198 lb. panel capacity
- 5 year warranty
- Meets ADA push force requirements

Finishes:
- Brushed Stainless Steel

SFT-W100 Kits Include:

1 ea	**SC-BAR/_** Stainless Steel Track with Two Soft Close Devices
–	**BRACKET2** Stainless Steel Wall Brackets
2 ea	**SC-111** Stainless Steel Hangers
1 ea	**102SS-KIT** Stainless Steel Guide
2 ea	**STOP3** Stainless Steel Stops Mounting Hardware
2 ea	**SC-TRG** Soft Close Activators

Standard Kit Sizes			
PART NUMBER	MATERIAL	TRACK LENGTH	DOOR WIDTH
SFT-W100/6	304 Stainless Steel	78 3/4"	36"
SFT-W100/8	304 Stainless Steel	98 7/16"	48"

Options:

Hardware Pack (One Door)	**W100H/PACK**
Mortise Guides	**102N**
Polypropylene Guide Rail	**EPD3BL** For Use With 102N and 102SS-KIT
5/8" Spacer	**BLD-SPACER-58** Pack of 5 5/8" Spacer Recommended for use with 5/8" Gypsum Board When Mounting Track Directly to Gypsum Board
Bottom Guide	**138N-SG1KIT** Surface Mounted Bottom Guide for 1 3/8" door panels

Copyright © 2015-2025, ASSA ABLOY Accessories and Door Controls Group, Inc., an ASSA ABLOY Group company. All rights reserved.
Reproduction in whole or in part without the express written permission of ASSA ABLOY Accessories and Door Controls Group, Inc. is prohibited.

PEMKO
ASSA ABLOY
Experience a safer and more open world

BUILDERS SERIES FLAT TRACK SLIDING DOOR HARDWARE SYSTEM

BLD-FT-01 FOR WOOD DOORS

For Sliding Panels up to 240 lbs.

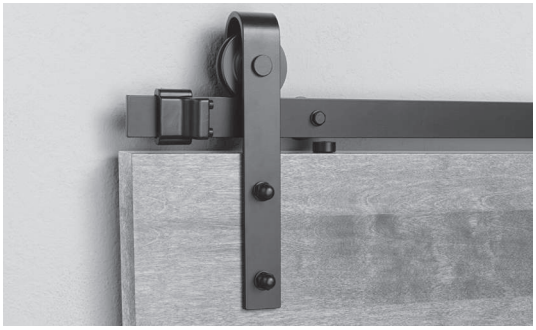

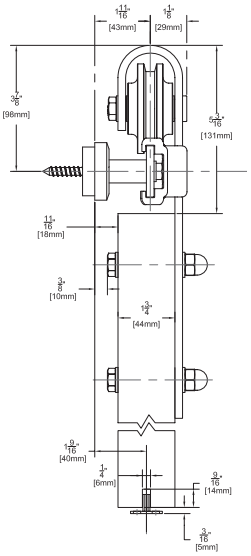

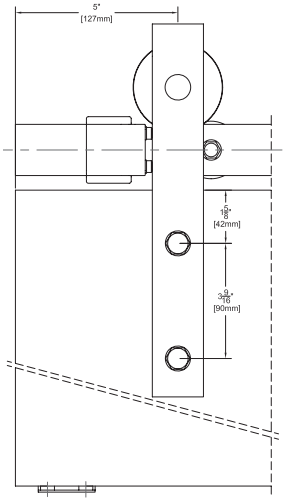

Configurations:
- Single
- Bi-parting

Installations:
- Side Wall Mount (only)

Features:
- Solid nylon wheel for smooth operation
- 240 lb. panel capacity
- Optional Soft Close
- 5 year warranty
- Meets ADA push force requirements

Finishes:
- Black Suede Powder Coated Steel (BLD-FT-01BSP)
- Industrial Steel Zinc Coated Steel (BLD-FT-01IS)

BLD-FT-01 Kits Include:

1 ea **BLD-FT_/_** Steel Flat Track
5 ea **BLD-99_** Steel Track Brackets
5 ea **BLD-88_** Steel Track Fasteners
2 ea **BLD-01-_** Steel Strap Mount Hangers
2 ea **BLD-77** Anti-Rise Discs
1 ea **102N** Mortised Type Nylon Guide
2 ea **BLD-11-_** Steel Track Stops Mounting Hardware

Standard Kit Sizes

PART NUMBER	MATERIAL	TRACK LENGTH	DOOR WIDTH
BLD-FT-01IS/6	Industrial Steel	72"	36"
BLD-FT-01IS/8	Industrial Steel	96"	48"
BLD-FT-01BSP/6	Black Suede Powder Coated Steel	72"	36"
BLD-FT-01BSP/8	Black Suede Powder Coated Steel	96"	48"

Custom lengths are available. Please contact the factory to order. Industrial Steel maximum track length is 8'. Lengths over 8' will be spliced by factory.

Options:

Thru-bolts for 1 3/8" thick doors 4 per door	**BLD-97-__**
Hardware Pack (One Door)	**BLD-FT01-__/PACK**
Side Wall Mortised Type Guide	**102WN-KIT**
Polypropylene Guide Rail	**EPD3BL** For Use With 102N
5/8" Spacer	**BLD-SPACER-58** Pack of 5 5/8" Spacer Recommended for use with 5/8" Gypsum Board When Mounting Track Directly to Gypsum Board

Soft Close available. See pages 256-258 for more information.

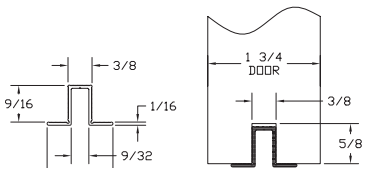

NOTE: Alternate route dimension when using optional EPD3BL

PEMKO
ASSA ABLOY
Experience a safer and more open world

Copyright © 2015-2025, ASSA ABLOY Accessories and Door Controls Group, Inc., an ASSA ABLOY Group company. All rights reserved. Reproduction in whole or in part without the express written permission of ASSA ABLOY Accessories and Door Controls Group, Inc. is prohibited.

BUILDERS SERIES FLAT TRACK SLIDING DOOR HARDWARE SYSTEM

BLD-FT-02 FOR WOOD DOORS

For Sliding Panels up to 240 lbs.

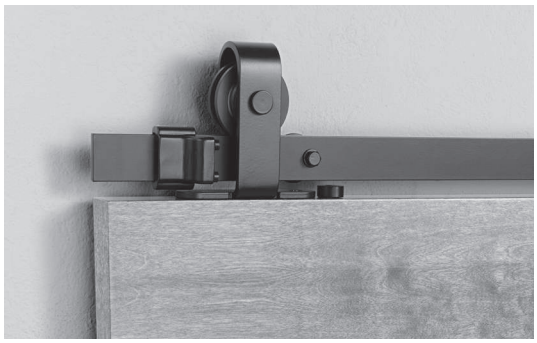

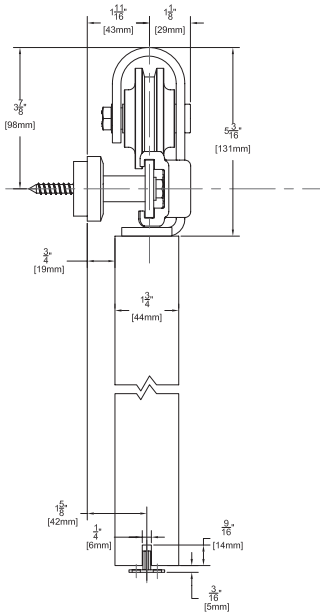

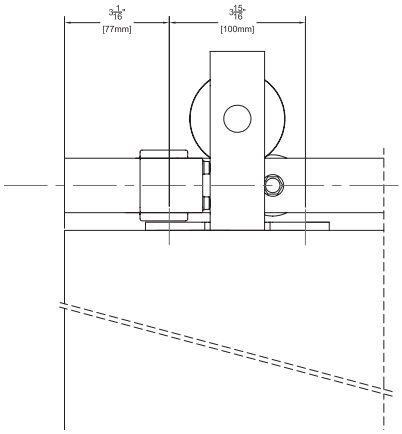

Configurations:
- Single
- Bi-parting

Installations:
- Side Wall Mount (only)

Features:
- Solid nylon wheel for smooth operation
- 240 lb. panel capacity
- Optional Soft Close
- 5 year warranty
- Meets ADA push force requirements

Finishes:
- Black Suede Powder Coated Steel (BLD-FT-02BSP)
- Industrial Steel Zinc Coated Steel (BLD-FT-02IS)

BLD-FT-02 Kits Include:

1 ea **BLD-FT_/_** Steel Flat Track
5 ea **BLD-99_** Steel Track Brackets
5 ea **BLD-88_** Steel Track Fasteners
2 ea **BLD-02-_** Steel Top Mount Hangers
2 ea **BLD-77** Anti-Rise Discs
1 ea **102N** Mortised Type Nylon Guide
2 ea **BLD-11-_** Steel Track Stops Mounting Hardware

Standard Kit Sizes

PART NUMBER	MATERIAL	TRACK LENGTH	DOOR WIDTH
BLD-FT-02IS/6	Industrial Steel	72"	36"
BLD-FT-02IS/8	Industrial Steel	96"	48"
BLD-FT-02BSP/6	Black Suede Powder Coated Steel	72"	36"
BLD-FT-02BSP/8	Black Suede Powder Coated Steel	96"	48"

Custom lengths are available. Please contact the factory to order. Industrial Steel maximum track length is 8'. Lengths over 8' will be spliced by factory.

Options: See page 278

Hardware Pack (One Door)	**BLD-FT02-__/PACK**
Side Wall Mortised Type Guide	**102WN-KIT**
Polypropylene Guide Rail	**EPD3BL** For Use With 102N
5/8" Spacer	**BLD-SPACER-58** Pack of 5 5/8" Spacer Recommended for use with 5/8" Gypsum Board When Mounting Track Directly to Gypsum Board
Bottom Guide	**138N-SG1KIT** Surface Mounted Bottom Guide for 1 3/8" door panels

Soft Close available. See pages 256-258 for more information.

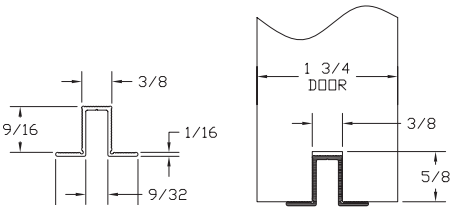

NOTE: Alternate route dimension when using optional EPD3BL

Copyright © 2015-2025, ASSA ABLOY Accessories and Door Controls Group, Inc., an ASSA ABLOY Group company. All rights reserved.
Reproduction in whole or in part without the express written permission of ASSA ABLOY Accessories and Door Controls Group, Inc. is prohibited.

PEMKO
ASSA ABLOY
Experience a safer and more open world

BUILDERS SERIES FLAT TRACK SLIDING DOOR HARDWARE SYSTEM

BLD-FT-HH FOR WOOD DOORS

For Sliding Panels up to 130 lbs.

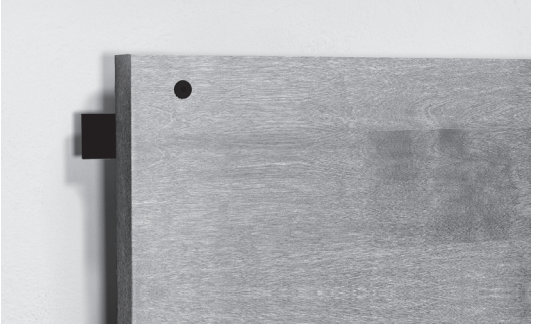

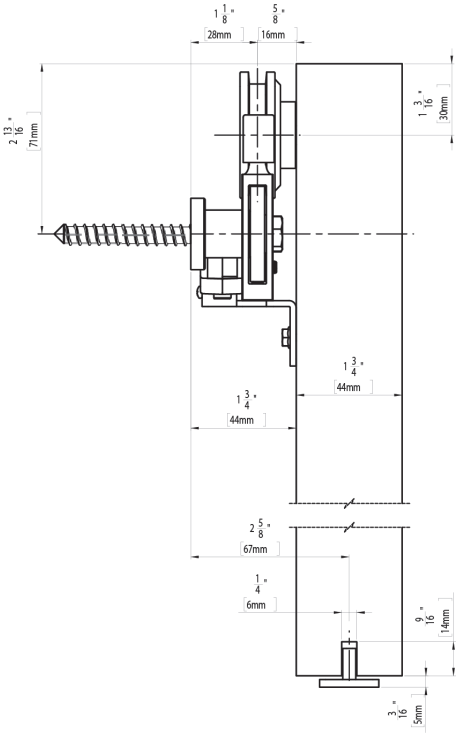

Configurations:
- Single
- Bi-parting

Installations:
- Side Wall Mount (only)

Features:
- Hidden hardware
- Solid nylon wheel for smooth operation
- 130 lbs. panel capacity
- Default soft close
- 5 year warranty
- Meets ADA push force requirements

Finishes:
- Black Suede Powder Coated Steel (BLD-FT-HHBSP)

BLD-FT-**HH** Kits Include:

1 ea	Steel Flat Track
5 ea	Steel Track Brackets
5 ea	Steel Track Fasteners
2 ea	Hangers assemblies
2 ea	Soft close devices
2 ea	Soft Close activator/Anti-rise
1 ea	Mortised type Guide
2 ea	Steel Track stops

Standard Kit Sizes

PART NUMBER	MATERIAL	TRACK LENGTH	DOOR WIDTH
BLD-FT-HHBSP/6-SC	Black Suede Powder Coated Steel	72"	36"
BLD-FT-HHBSP/8-SC	Black Suede Powder Coated Steel	96"	48"

Custom lengths are available. Please contact the factory to order. Maximum track length is 8'. Lengths over 8' will be spliced by factory.

Options:

Hardware Pack (One Door)	**BLD-FTHH-BS/PACK**
Polypropylene Guide Rail	**EPD3BL** For Use With 102N
5/8" Spacer	**BLD-SPACER-58** Pack of 5 5/8" Spacer Recommended for use with 5/8" Gypsum Board When Mounting Track Directly to Gypsum Board
Bottom Guide	**138N-SG1KIT** Surface Mounted Bottom Guide for 1 3/8" door panels

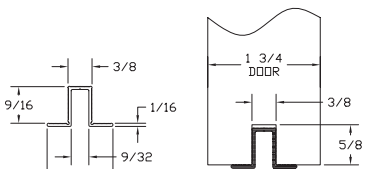

NOTE: Alternate route dimension when using optional EPD3BL

PEMKO
ASSA ABLOY
Experience a safer and more open world

800-824-3018 | www.pemko.com
Check the web site for the up-to-date catalog

Copyright © 2015-2025, ASSA ABLOY Accessories and Door Controls Group, Inc., an ASSA ABLOY Group company. All rights reserved. Reproduction in whole or in part without the express written permission of ASSA ABLOY Accessories and Door Controls Group, Inc. is prohibited.

DESIGNER SERIES FLAT TRACK SLIDING DOOR HARDWARE SYSTEM

DSG-FT-05 FOR WOOD DOORS

For Sliding Panels up to 500 lbs.



Shown in Industrial Steel finish

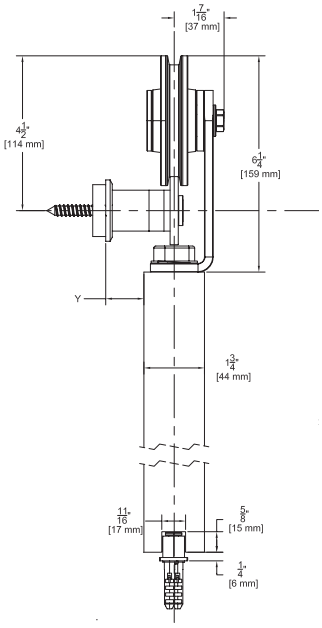

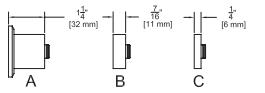

Wall Bracket Combination				
	A	A+C	A+B	A+B+C
"Y"	1/2"	3/4"	1"	1-1/4"

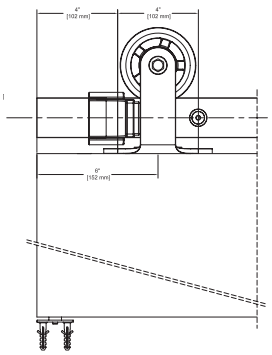

Configurations:

- Single
- Bi-parting

Installations:

- Side Wall Mount (only)

Features:

- Solid steel wheel with a polymer resin contact surface for smooth operation
- 500 lb. panel capacity
- 5 year warranty

Finishes:

- Black Suede Powder Coated Steel (DSG-FT-05BSP)
- Stainless Steel (DSG-FT-05SS)

DSG-FT-05 Kits include:

1 ea	**DSG-FT**_/_ Steel Flat Track
7 to 9 ea	**DSG-100**_ Steel Track Brackets
7 to 9 ea	**DSG-89**_ Steel Track Fasteners
2 ea	**DSG-05-**_ Steel Top Mount Hangers
2 ea	**DSG-78** Anti-Rise Blocks
1 ea	**DSG-106** Mortised Type Roller Guide
2 ea	**DSG-12-**_ Steel Track Stops Mounting Hardware

Standard Kit Sizes			
PART NUMBER	MATERIAL	TRACK LENGTH	DOOR WIDTH
DSG-FT-05BSP/6	Black Suede Powder Coated Steel	72"	36"
DSG-FT-05BSP/8	Black Suede Powder Coated Steel	96"	48"
DSG-FT-05SS/6	Stainless Steel	72"	36"
DSG-FT-05SS/8	Stainless Steel	96"	48"
DSG-FT-05IS/6	Industrial Steel	72"	36"
DSG-FT-05IS/8	Industrial Steel	96"	48"

Custom lengths are available. Please contact the factory to order. Industrial Steel maximum track length is 8'. Lengths over 8' will be spliced by factory.

Options:

Hardware Pack (One Door)	**DSG-FT05-__/PACK**
Side Wall Mortised Type Guide	**102WN-KIT**
5/8" Spacer	**BLD-SPACER-58** Pack of 5 5/8" Spacer Recommended for use with 5/8" Gypsum Board When Mounting Track Directly to Gypsum Board

Soft Close available. See pages 256-258 for more information.

Copyright © 2015-2025, ASSA ABLOY Accessories and Door Controls Group, Inc., an ASSA ABLOY Group company. All rights reserved.
Reproduction in whole or in part without the express written permission of ASSA ABLOY Accessories and Door Controls Group, Inc. is prohibited.

PEMKO
ASSA ABLOY
Experience a safer and more open world

DESIGNER SERIES FLAT TRACK SLIDING DOOR HARDWARE SYSTEM

DSG-FT-06 FOR WOOD DOORS

For Sliding Panels up to 500 lbs.
Only for doors 1 ½" to 2 ¼" thick.



Shown in Stainless Steel with a solid wheel. DGS-FT-06 in all other finishes have spoked wheels.

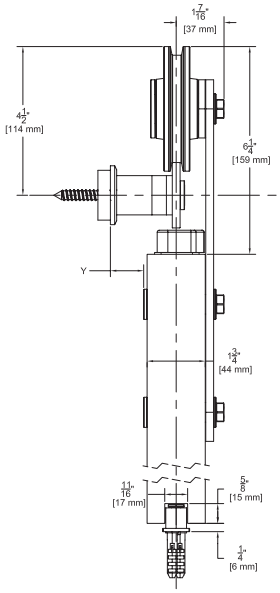

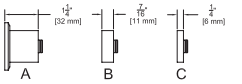

Wall Bracket Combination				
	A	A+C	A+B	A+B+C
"Y"	7/16"	11/16"	7/8"	1-1/8"

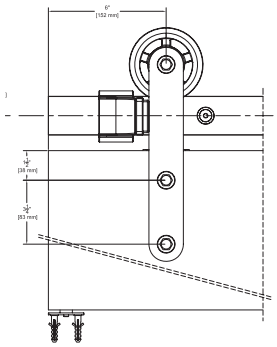

Configurations:
- Single
- Bi-parting

Installations:
- Side Wall Mount (only)

Features:
- Solid steel wheel with a polymer resin contact surface for smooth operation
- 500 lb. panel capacity
- 5 year warranty

Finishes:
- Black Black Suede Powder Coated Steel (DSG-FT-06BSP)
- Stainless Steel (DSG-FT-06SS)

DSG-FT-06 Kits include:

1 ea	**DSG-FT**_/_ Steel Flat Track
7 to 9 ea	**DSG-100**_ Steel Track Brackets
7 to 9 ea	**DSG-89**_ Steel Track Fasteners
2 ea	**DSG-06-**_ Steel Top Mount Hangers
2 ea	**DSG-78** Anti-Rise Blocks
1 ea	**DSG-106** Mortised Type Roller Guide
2 ea	**DSG-12-**_ Steel Track Stops Mounting Hardware

Standard Kit Sizes			
PART NUMBER	MATERIAL	TRACK LENGTH	DOOR WIDTH
DSG-FT-06BSP/6	Black Suede Powder Coated Steel	72"	36"
DSG-FT-06BSP/8	Black Suede Powder Coated Steel	96"	48"
DSG-FT-06SS/6	Stainless Steel	72"	36"
DSG-FT-06SS/8	Stainless Steel	96"	48"

Custom lengths are available. Please contact the factory to order. Industrial Steel maximum track length is 8'. Lengths over 8' will be spliced by factory.

Options:

Hardware Pack (One Door)	**DSG-FT06-__/PACK**
Side Wall Mortised Type Guide	**102WN-KIT**
5/8" Spacer	**BLD-SPACER-58** Pack of 5 5/8" Spacer Recommended for use with 5/8" Gypsum Board When Mounting Track Directly to Gypsum Board

Soft Close available. See pages 256-258 for more information.

PEMKO
ASSA ABLOY
Experience a safer and more open world

Copyright © 2015-2025, ASSA ABLOY Accessories and Door Controls Group, Inc., an ASSA ABLOY Group company. All rights reserved. Reproduction in whole or in part without the express written permission of ASSA ABLOY Accessories and Door Controls Group, Inc. is prohibited.

SIMULTANEOUS ACTING SLIDING DOOR SYSTEM

SIM 150 FOR 2 DOOR SYSTEMS

For Sliding Panels up to 176 lbs.

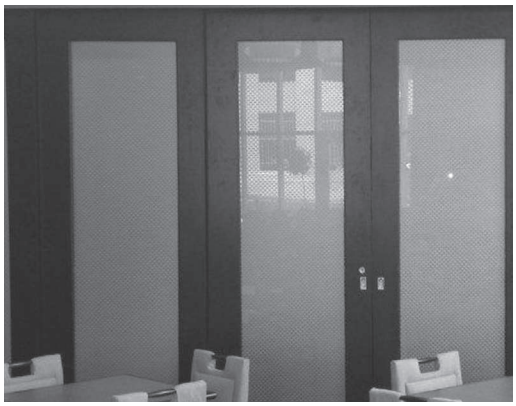

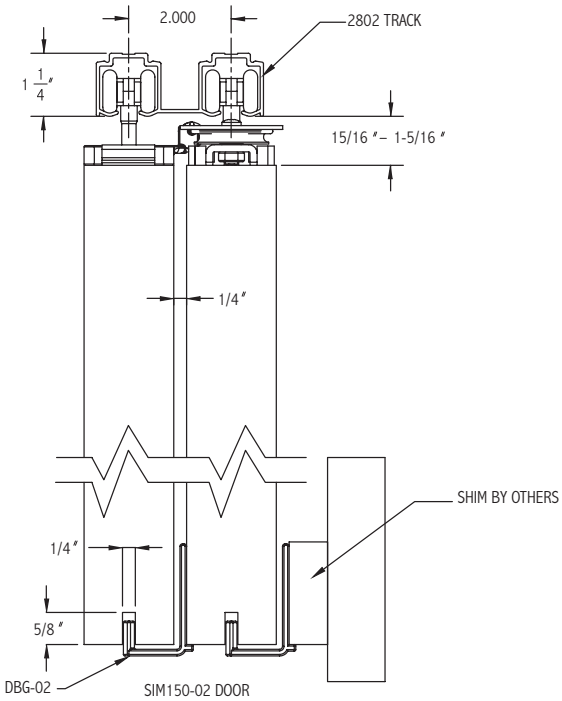

Alternate Route for EPD3BL

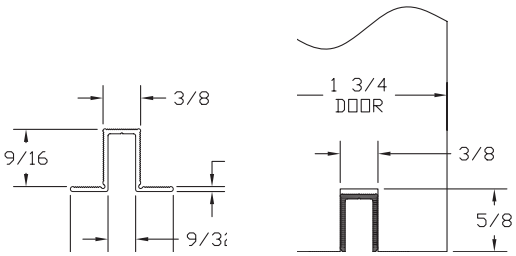

Configurations:
- Bi-part Telescoping

Installations:
- Overhead Mount

Features:
- Easy to install with self aligning components
- Telescoping panels glide along the track
- Doors retract into storage pockets when not in use
- 5 year warranty

Finishes:
- Clear (C)
- Dark Bronze (D)

Pulley System Kit Includes:

Pre-Assembled Pulley System
In-Track Stops and Hangers
Door Bottom Guides
Floor Stops, Back Stop and End Plates
Installation Fasteners

Single Extrusion Aluminum Track must be ordered separately.

Specify door width when ordering. Default door overlap is 3". Any other overlap must be specified (Min. overlap is 2").

Note: All doors must be of equal width.

Pulley System Kits	
PART NUMBER	DOOR WIDTH
SIM150-2-LH/25-32	25" - 32"
SIM150-2-LH/33-40	33" - 40"
SIM150-2-LH/41-48	41" - 48"
SIM150-2-RH/25-32	25" - 32"
SIM150-2-RH/33-40	33" - 40"
SIM150-2-RH/41-48	41" - 48"

System Track Ordered Separately		
TRACK	FINISH	TRACK LENGTH
2802C	Clear	up to 147"
2802D	Dark	up to 185"

Options:

Lock Kit- includes lock with edge pull, and cup pull, **SIM150-LOCKKIT**

Bolt Kit- includes surface bolt, dust-proof strike, cup pull, and edge pull, **SIM150-BOLTKIT**

Snap-on Fascia Available **F134**

Polypropylene Guide Rail **EPD3BL**

Copyright © 2015-2025, ASSA ABLOY Accessories and Door Controls Group, Inc., an ASSA ABLOY Group company. All rights reserved.
Reproduction in whole or in part without the express written permission of ASSA ABLOY Accessories and Door Controls Group, Inc. is prohibited.

PEMKO
ASSA ABLOY
Experience a safer and more open world

SIMULTANEOUS ACTING SLIDING DOOR SYSTEM
SIM 150 FOR 3 DOOR SYSTEMS

For Sliding Panels up to 176 lbs.



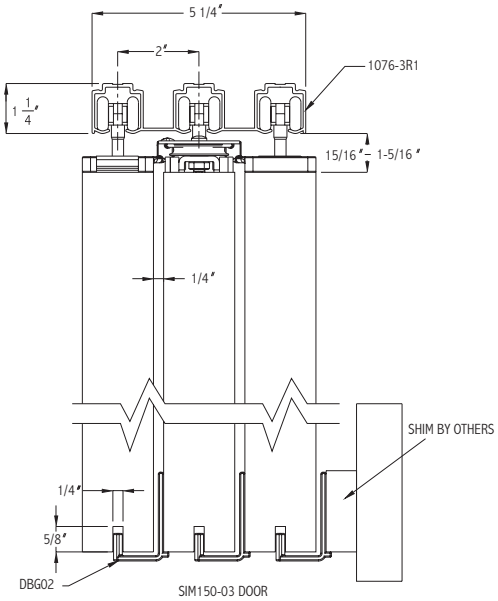

Alternate Route for EPD3BL

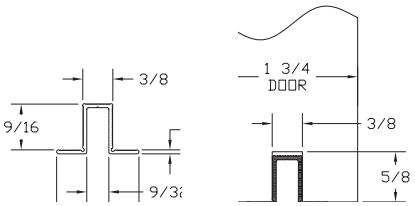

Configurations:
- Bi-part Telescoping

Installations:
- Overhead Mount

Features:
- Easy to install with self aligning components
- Telescoping panels glide along the track
- Doors retract into storage pockets when not in use
- 5 year warranty

Finishes:
- Clear (C)
- Dark Bronze (D)

Pulley System Kit Includes:

Pre-Assembled Pulley System
In-Track Stops and Hangers
Door Bottom Guides
Floor Stops, Back Stop and End Plates
Installation Fasteners

Single Extrusion Aluminum Track must be ordered separately.

Specify door width when ordering. Default door overlap is 3". Any other overlap must be specified (Min. overlap is 2").
Note: All doors must be of equal width.

Pulley System Kits	
PART NUMBER	DOOR WIDTH
SIM150-3-LH/25-32	25" - 32"
SIM150-3-LH/33-40	33" - 40"
SIM150-3-LH/41-48	41" - 48"
SIM150-3-RH/25-32	25" - 32"
SIM150-3-RH/33-40	33" - 40"
SIM150-3-RH/41-48	41" - 48"

System Track Ordered Separately		
TRACK	FINISH	TRACK LENGTH
2803C and 280C	Clear	up to 144"
2803D and 280D	Dark	up to 144"

Options:

Lock Kit- includes lock with edge pull, and cup pull, **SIM150-LOCKKIT**

Bolt Kit- includes surface bolt, dust-proof strike, cup pull, and edge pull, **SIM150-BOLTKIT**

Snap-on Fascia Available **F134**

Polypropylene Guide Rail **EPD3BL**

PEMKO
ASSA ABLOY
Experience a safer and more open world

800-824-3018 | www.pemko.com
Check the web site for the up-to-date catalog

Copyright © 2015-2025, ASSA ABLOY Accessories and Door Controls Group, Inc., an ASSA ABLOY Group company. All rights reserved. Reproduction in whole or in part without the express written permission of ASSA ABLOY Accessories and Door Controls Group, Inc. is prohibited.

CASCADING SLIDING DOOR SYSTEM

For Sliding Panels up to 200 lbs. each.



Note: All doors must be of equal width.
Minimum overlap between doors is 2".

Cased Opening



Pocket

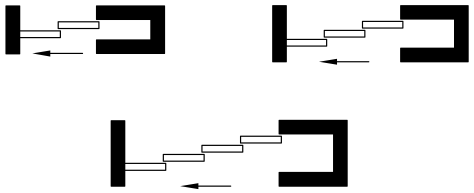

Side Wall Mount

NOTE: Side Wall track Brackets Shown Under Options Must be Ordered Separately for Side Wall Mount Openings



Configurations:

- Bi-part Telescoping
- Single Direction Telescoping

Features:

- Opening and closing of lead door results in the trailing doors to follow because of interlocking hardware at door top edges
- Easy to install with self aligning components on 1 3/4" and 1 3/8" thick doors
- Telescoping panels glide along the track
- Solid steel catches with rubber bumpers ensure durable yet quiet operation
- 200 lb. per door weight capacity
- 5 year warranty

Cascading Kit Includes:

CAS-05 Catches - Mechanical Catch system - 2 Per Door
601H - Track Stops - 2 Per Door
H222R1 - Hangers - 2 Per Door
DBG-02R1 - Door Bottom Guides - 1 Per Door
TELS-23 - End Plates - 2 Per Door
2802C - Single Extrusion - Dual Track
280C - Single Extrusion - Single Track
C1076-TC - Track Connector for CAS200A-4/_ Kits
EPD3-BL - Polypropylene Guide Rails - 1 Per Door
WRENCH14 - 1 Hanger Wrench Hardware Fasteners

Cascading System Kits			
PART NUMBER	TRACK LENGTH	# OF DOORS	INSTALLATION
CAS200A-2/6	6'	2	Pocket Side Wall
CAS200A-2/8	8'	2	
CAS200A-2/10	10'	2	
CAS200A-2/12	12'	2	
CAS200A-3/8	8'	3	Pocket Cased Opening Side Wall
CAS200A-3/10	10'	3	
CAS200A-3/12	12'	3	
CAS200A-3/16	16'	3	
CAS200A-4/8	8'	4	Pocket Cased Opening
CAS200A-4/10	10'	4	
CAS200A-4/12	12'	4	
CAS200A-4/16	16'	4	

For special number of doors and for dark bronze track, please contact Technical Support for more information

Options:

Lock Kit	**SIM150-LOCKKIT** includes lock with edge pull and cup pull
Bolt Kit	**SIM150-BOLTKIT** includes surface bolt, dust-proof strike, cup pull, and edge pull
Fascia	**F134C** Snap-on Fascia
Splice Kit	**C1076-2SPLKIT** for use withBi-Parting systems and 2802C Track **C1076-3SPLKIT** for use with Bi-Parting systems and 2803C Track
Back Stop	**TELS-25** for use with pocket systems when no access to in track stops in pocket
Side Wall Track Bracket	**2812KIT** for use with 2802C Track (1 for every 12" of track) **2813KIT** for use with 2803C Track (1 for every 12" of track)
Side Wall Joining Bracket	**2813-5KIT** for use with Side Wall Bi-Parting systems and **2803C** Track

Copyright © 2015-2025, ASSA ABLOY Accessories and Door Controls Group, Inc., an ASSA ABLOY Group company. All rights reserved.
Reproduction in whole or in part without the express written permission of ASSA ABLOY Accessories and Door Controls Group, Inc. is prohibited.

PEMKO
ASSA ABLOY
Experience a safer and more open world

PEMKOMATIC™ SLIDING DOOR OPERATOR

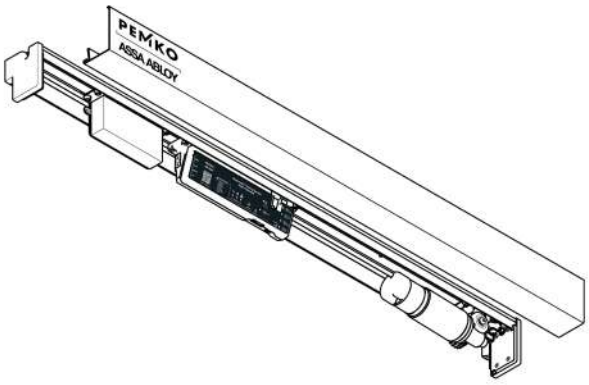

Automates Sliding Doors

Our PemkoMatic™ (PSLIDE) low energy automatic door operating system offers versatile electromechanical solutions for manual sliding doors, featuring convenient multi-access options including a wave-to-open sensor, push button, or keypad. Designed to fit seamlessly with both pocket and sliding doors, it is ideal for new installations as well as retrofitting existing openings. The system features a sleek cover, combining functionality with a clean, aesthetically pleasing design.

Installations:

- Overhead Mounted Sliding Systems
- Side Wall Mounted Sliding Systems

Features:

- Sliding Door Types: Barn Door and Pocket Doors
- 36" L x 2.5" W x 3" H
- Mounts to header
- Optional adapter bracket available for non-header installations
- Recess into the wall for full-opening width access
- Cover and track can be cut to size
- 330 lb. per door weight capacity, supports door widths up to the maximum door weight capacity
- Easy-to-use controls
- New construction or retrofit
- Designed for smooth and silent door movement
- Two 20" tracks, additional tracks are needed for doors wider than 40"
- Field Reversible (Left-hand supplied)
- Customizable settings
  - Green/Auto Mode: Ideal for everyday use with open-assist enabled and the door unlocked
  - Blue/Hold Open Mode: Keeps the door fully open by default for convenience
  - Red/Lock Mode: Open-assist is disabled, the door is locked, and access is only available through a keypad or door activator

Finishes:

- Black
- White
- Clear Anodized Aluminum

Inside The Device:

2 ea	End Caps
1 ea	Base
1 ea	Cover
1 ea	Power Adaptor
1 ea	Control Panel
2 ea	Brush
1 ea	Motor

Features - Electrical, Certifications and Standards:

- Input for Power Adapter - 120V, 50/60HZ, 2.7A
- Adjustable 0-24 second open time
- Customizable DIP Switches
- Power level for lightweight or heavy doors, beeper alerts
- Reverts to a manual sliding door in the event of power failure
- Operator certified to ANSI/UL standard 325 for automatic closing doors
- Tested to ANSI BHMA A156.38
- Door activators have a 12 month battery life and power supplies of 3V – two CR2032 batteries
- Can be installed and adjusted to conform with ADA regulations
- Door activators comply with part 15 of FCC Rules

PemkoMatic™ Kits Include:

1 ea	Sliding Operator (PSLIDE)
2 ea	Slim Track (ST-PSLIDE)
1 ea	Keypad (KP-PSLIDE)
1 ea	Wave Sensors (WP-PSLIDE)
1 ea	Mode Pad (MP-PSLIDE)
16 ea	(#8 x 1") Wood Screws
8 ea	(#8 x 1") Sheet Metal Screws
1 ea	Hex Key, Screwdriver, Wrench
4	Motor Wheels in Differen Lengths
	Fasteners and double-sided tapes for mounting activators
	Cable retaining clips
	Cable for hardwiring Wave Sensors and Mode Pad
	'Wave to Open' Sticker
	'Automatic Door' Sticker

Standard Kit Sizes

PART NUMBER	DESCRIPTION	PRODUCT SIZE (L X W X H)
PSLIDE-BSP/36	Black Automatic System	5.5" x 1.5" x 0.5"
PSLIDE-WSP/36	White Automatic System	5" x 1.5" x. 0.5"
PSLIDE-C/36	Clear Aluminum Automatic System	3.5" x 3" x. 1.5"

Options:

Wave Sensor	**WS-PSLIDE**
Push Button	**PB-PSLIDE**
Keypad	**KP-PSLIDE**

PEMKO
ASSA ABLOY
Experience a safer and more open world

800-824-3018 | www.pemko.com
Check the web site for the up-to-date catalog

Copyright © 2015-2025, ASSA ABLOY Accessories and Door Controls Group, Inc., an ASSA ABLOY Group company. All rights reserved. Reproduction in whole or in part without the express written permission of ASSA ABLOY Accessories and Door Controls Group, Inc. is prohibited.

PEMPASS™ HEALTHCARE SPLIT TRACK SLIDING DOOR SYSTEM



Configuration:

- Dual Track

Installation:

- Side Wall Mount

Features:

- Healthcare environments requiring a center gap for ceiling-mounted lift systems.
- Allows the door to smoothly cross a center gap of up to 12 inches
- Top-mounted hangers for wood doors (W60) or face-mounted hangers for wood or metal doors (W100).
- 304 stainless steel construction for durability and corrosion resistance

Finish:

- US32D Brushed Stainless Steel

PemPass™ Kit Includes:

- Short Track and Long Track segments
- Door Stops and Hangers
- Wall Brackets
- Floor Guide
- Dry Wall Spacers
- Fasteners, Wrench and Hex Key

PEMPASS-W60: Wood Door

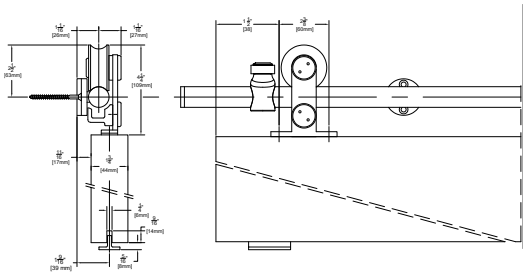

Standard Kit Sizes			
PART NUMBER	MATERIAL	DOOR WIDTH	TRACK LENGTH
PEMPASS-W60	Wood	36" - 72"	67" - 144"
PEMPASS-W100	Wood or Metal	36" - 72"	67" - 144"

PEMPASS-W100: Wood Door

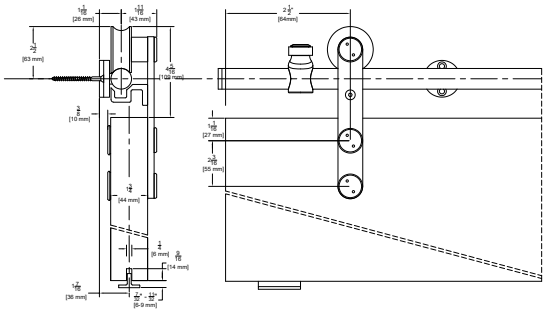

PEMPASS-W100: Metal Door

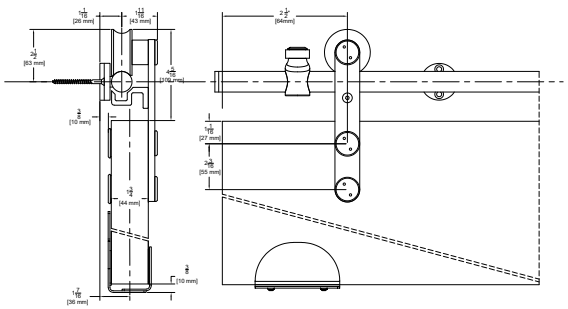

Copyright © 2015-2025, ASSA ABLOY Accessories and Door Controls Group, Inc., an ASSA ABLOY Group company. All rights reserved.
Reproduction in whole or in part without the express written permission of ASSA ABLOY Accessories and Door Controls Group, Inc. is prohibited.

PEMKO
ASSA ABLOY
Experience a safer and more open world

PRIVACY BARN DOOR LOCK

PEMKO SDL SERIES FOR SURFACE MOUNTED SLIDING DOORS



Configurations:

- Single

Installations:

- Side Wall Mount (only)
- For Side Wall Mounted Sliding Door Openings only
- New Construction
- Retro
- ADA

Features:

- Quick and easy installation
- Handing is reversible in the field
- ADA option available
- Privacy Function
- Includes Emergency Release Key
- Doors can be prepped in the field
- 5 year warranty

Finishes:

- Brushed Stainless Steel
- Polished Stainless Steel
- Black Graphite
- Contact factory if custom finish is required for more information

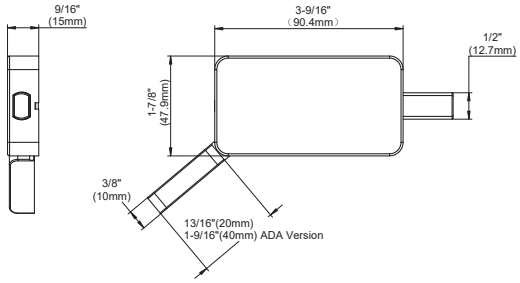

Standard Kit Sizes		
PART NUMBER	MATERIAL	ADA COMPLIANT
SDL32D	Brushed Stainless	
SDL32	Polished Stainless	
SDL32D-ADA	Brushed Stainless	•
SDL32-ADA	Polished Stainless	•
SDL19-ADA	Black Graphite	•

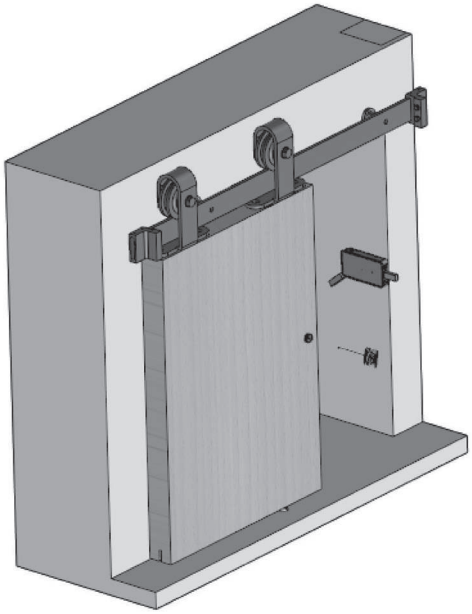

NOTE: For doors with 3/8" - 3/4" clearance between the wall or frame & door face

Compatible with the following Pemko sliding door kits:
W60 Series
W70 Series (with 3/8" to 3/4" clearance)
W80 Series (with 3/8" to 3/4" clearance)
W90 Series (with 3/8" to 3/4" clearance)
W100 Series
Side Wall Box Track Series (SWT)
BLD Flat Track Series
DSG Flat Track Series (with 3/8" to 3/4" clearance)

PEMKO
ASSA ABLOY
Experience a safer and more open world

Copyright © 2015-2025, ASSA ABLOY Accessories and Door Controls Group, Inc., an ASSA ABLOY Group company. All rights reserved. Reproduction in whole or in part without the express written permission of ASSA ABLOY Accessories and Door Controls Group, Inc. is prohibited.

OPTIONS & ACCESSORIES

A visual guide to various parts

Mounting Brackets



281
(Sold in 5 packs, PC2815)



2812

Fascia

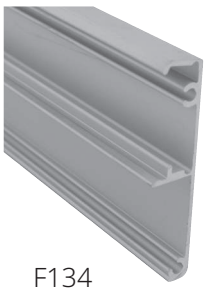

F134

End plates



K134EP

Stops



TELS-14KIT



PFBS

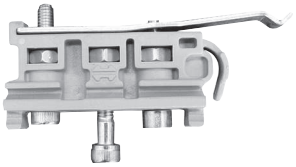

601H

Guides



102N



PFBG-4



106R/94



102WA



PFBG-8



106N/94

Pulls and Flush Bolts



503SF



FB150SS

Hardware Kits

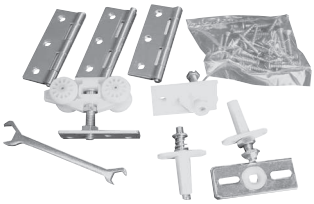

Folding
HF2/100 Pack

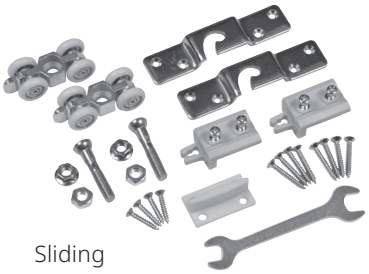

Sliding
H200PACK

Bottom Channel



94A



2802BT

Privacy Seals



PEMKOSFSET1



PEMKOSFSET2



PEMKOSFSET3



PEMKOSFSET4



PEMKOSFSET5

For more information, see page 196

Copyright © 2015-2025, ASSA ABLOY Accessories and Door Controls Group, Inc., an ASSA ABLOY Group company. All rights reserved.
Reproduction in whole or in part without the express written permission of ASSA ABLOY Accessories and Door Controls Group, Inc. is prohibited.

PEMKO
ASSA ABLOY
Experience a safer and more open world

SOFT CLOSE FOR PEMKO BOX TRACK SYSTEMS

For Pemko H200, SHS80, HBP200, and Side Wall Track (SWT) systems

Minimum Door Width 28" When Using Dual or Single Devices.

Please Note: The warranty is void if door weight does not match the rated capacity of the soft-close mechanism.

For doors weighing 88-132 lbs.	
ITEM #	DESCRIPTION
SHS80_/6-1411-1	SHS80_ 6' Single Device
SHS80_/8-1411-1	SHS80_ 8' Single Device
SHS80_/6-1411-2	SHS80_ 6' Dual Devices
SHS80_/8-1411-2	SHS80_ 8' Dual Devices
H200_/6-1411-1	H200_ 6' Single Device
H200_/8-1411-1	H200_ 8' Single Device
H200_/10-1411-1	H200_ 10' Single Device
H200_/12-1411-1	H200_ 12' Single Device
H200_/6-1411-2	H200_ 6' Dual Devices
H200_/8-1411-2	H200_ 8' Dual Devices
H200_/10-1411-2	H200_ 10' Dual Devices
H200_/12-1411-2	H200_ 12' Dual Devices
280_-SWTKIT/6-1411-1	280_-SWTKIT 6' Single Device
280_-SWTKIT/8-1411-1	280_-SWTKIT 8' Single Device
280_-SWTKIT/12-1411-1	280_-SWTKIT 12' One Device Per Door
280_-SWTKIT/6-1411-2	280_-SWTKIT 6' Dual Devices
280_-SWTKIT/8-1411-2	280_-SWTKIT 8' Dual Devices
280_-SWTKIT/12-1411-2	280_-SWTKIT 12' Two Devices Per Door
RF280_-SWTK/6-1411-1	RF280_-SWTK 6' Single Device
RF280_-SWTK/8-1411-1	RF280_-SWTK 8' Single Device
RF280_-SWTK/12-1411-1	RF280_-SWTK 12' One Device Per Door
RF280_-SWTK/6-1411-2	RF280_-SWTK 6' Dual Devices
RF280_-SWTK/8-1411-2	RF280_-SWTK 8' Dual Devices
RF280_-SWTK/12-1411-2	RF280_-SWTK 12' Two Devices Per Door
SF280_-SWTK/6-1411-1	SF280_-SWTK 6' Single Device
SF280_-SWTK/8-1411-1	SF280_-SWTK 8' Single Device
SF280_-SWTK/12-1411-1	SF280_-SWTK 12' One Device Per Door
SF280_-SWTK/6-1411-2	SF280_-SWTK 6' Dual Devices
SF280_-SWTK/8-1411-2	SF280_-SWTK 8' Dual Devices
SF280_-SWTK/12-1411-2	SF280_-SWTK 12' Two Devices Per Door
HBP200_/6-1411-1	HBP200_ 6' One Device Per Door
HBP200_/8-1411-1	HBP200_ 8' One Device Per Door
HBP200_/10-1411-1	HBP200_ 10' One Device Per Door
HBP200_/12-1411-1	HBP200_ 12' One Device Per Door
HBP200_/6-1411-2	HBP200_ 6' Two Devices Per Door
HBP200_/8-1411-2	HBP200_ 8' Two Devices Per Door
HBP200_/10-1411-2	HBP200_ 10' Two Devices Per Door
HBP200_/12-1411-2	HBP200_ 12' Two Devices Per Door

For doors weighing 133-176 lbs.	
ITEM #	DESCRIPTION
SHS80_/6-1413-1	SHS80_ 6' Single Device
SHS80_/8-1413-1	SHS80_ 8' Single Device
SHS80_/6-1413-2	SHS80_ 6' Dual Devices
SHS80_/8-1413-2	SHS80_ 8' Dual Devices
H200_/6-1413-1	H200_ 6' Single Device
H200_/8-1413-1	H200_ 8' Single Device
H200_/10-1413-1	H200_ 10' Single Device
H200_/12-1413-1	H200_ 12' Single Device
H200_/6-1413-2	H200_ 6' Dual Devices
H200_/8-1413-2	H200_ 8' Dual Devices
H200_/10-1413-2	H200_ 10' Dual Devices
H200_/12-1413-2	H200_ 12' Dual Devices
280_-SWTKIT/6-1413-1	280_-SWTKIT 6' Single Device
280_-SWTKIT/8-1413-1	280_-SWTKIT 8' Single Device
280_-SWTKIT/12-1413-1	280_-SWTKIT 12' One Device per Door
280_-SWTKIT/6-1413-2	280_-SWTKIT 6' Dual Devices
280_-SWTKIT/8-1413-2	280_-SWTKIT 8' Dual Devices
280_-SWTKIT/12-1413-2	280_-SWTKIT 12' Two Devices per Door
RF280_-SWTK/6-1413-1	RF280_-SWTK 6' Single Device
RF280_-SWTK/8-1413-1	RF280_-SWTK 8' Single Device
RF280_-SWTK/12-1413-1	RF280_-SWTK 12' One Device per Door
RF280_-SWTK/6-1413-2	RF280_-SWTK 6' Dual Devices
RF280_-SWTK/8-1413-2	RF280_-SWTK 8' Dual Devices
RF280_-SWTK/12-1413-2	RF280_-SWTK 12' Two Devices per Door
SF280_-SWTK/6-1413-1	SF280_-SWTK 6' Single Device
SF280_-SWTK/8-1413-1	SF280_-SWTK 8' Single Device
SF280_-SWTK/12-1413-1	SF280_-SWTK 12' One Device per Door
SF280_-SWTK/6-1413-2	SF280_-SWTK 6' Dual Devices
SF280_-SWTK/8-1413-2	SF280_-SWTK 8' Dual Devices
SF280_-SWTK/12-1413-2	SF280_-SWTK 12' Two Devices per Door
HBP200_/6-1413-1	HBP200_ 6' One Device Per Door
HBP200_/8-1413-1	HBP200_ 8' One Device Per Door
HBP200_/10-1413-1	HBP200_ 10' One Device Per Door
HBP200_/12-1413-1	HBP200_ 12' One Device Per Door
HBP200_/6-1413-2	HBP200_ 6' Two Devices Per Door
HBP200_/8-1413-2	HBP200_ 8' Two Devices Per Door
HBP200_/10-1413-2	HBP200_ 10' Two Devices Per Door
HBP200_/12-1413-2	HBP200_ 12' Two Devices Per Door

Copyright © 2015-2025, ASSA ABLOY Accessories and Door Controls Group, Inc., an ASSA ABLOY Group company. All rights reserved. Reproduction in whole or in part without the express written permission of ASSA ABLOY Accessories and Door Controls Group, Inc. is prohibited.

SOFT CLOSE FOR PEMKO BOX TRACK SYSTEMS *(Continued)*

For Pemko H200, SHS80, HBP200, and Side Wall Track (SWT) systems

Minimum Door Width 28" When Using Dual or Single Devices.

For doors weighing 177-200 lbs.	
ITEM #	DESCRIPTION
SHS80_/6-1418-1	SHS80_ 6' Single Device
SHS80_/8-1418-1	SHS80_ 8' Single Device
SHS80_/6-1418-2	SHS80_ 6' Dual Devices
SHS80_/8-1418-2	SHS80_ 8' Dual Devices
H200_/6-1418-1	H200_ 6' Single Device
H200_/8-1418-1	H200_ 8' Single Device
H200_/10-1418-1	H200_ 10' Single Device
H200_/12-1418-1	H200_ 12' Single Device
H200_/6-1418-2	H200_ 6' Dual Devices
H200_/8-1418-2	H200_ 8' Dual Devices
H200_/10-1418-2	H200_ 10' Dual Devices
H200_/12-1418-2	H200_ 12' Dual Devices
280_-SWTKIT/6-1418-1	280_-SWTKIT 6' Single Device
280_-SWTKIT/8-1418-1	280_-SWTKIT 8' Single Device
280_-SWTKIT/12-1418-1	280_-SWTKIT 12' One Device Per Door
280_-SWTKIT/6-1418-2	280_-SWTKIT 6' Dual Devices
280_-SWTKIT/8-1418-2	280_-SWTKIT 8' Dual Devices
280_-SWTKIT/12-1418-2	280_-SWTKIT 12' Two Devices Per Door
RF280_-SWTK/6-1418-1	RF280_-SWTK 6' Single Device
RF280_-SWTK/8-1418-1	RF280_-SWTK 8' Single Device
RF280_-SWTK/12-1418-1	RF280_-SWTK 12' One Device Per Door
RF280_-SWTK/6-1418-2	RF280_-SWTK 6' Dual Devices
RF280_-SWTK/8-1418-2	RF280_-SWTK 8' Dual Devices
RF280_-SWTK/12-1418-2	RF280_-SWTK 12' Two Devices Per Door
SF280_-SWTK/6-1418-1	SF280_-SWTK 6' Single Device
SF280_-SWTK/8-1418-1	SF280_-SWTK 8' Single Device
SF280_-SWTK/12-1418-1	SF280_-SWTK 12' One Device Per Door
SF280_-SWTK/6-1418-2	SF280_-SWTK 6' Dual Devices
SF280_-SWTK/8-1418-2	SF280_-SWTK 8' Dual Devices
SF280_-SWTK/12-1418-2	SF280_-SWTK 12' Two Devices Per Door
HBP200_/6-1418-1	HBP200_ 6' One Device Per Door
HBP200_/8-1418-1	HBP200_ 8' One Device Per Door
HBP200_/10-1418-1	HBP200_ 10' One Device Per Door
HBP200_/12-1418-1	HBP200_ 12' One Device Per Door
HBP200_/6-1418-2	HBP200_ 6' Two Devices Per Door
HBP200_/8-1418-2	HBP200_ 8' Two Devices Per Door
HBP200_/10-1418-2	HBP200_ 10' Two Devices Per Door
HBP200_/12-1418-2	HBP200_ 12' Two Devices Per Door

SOFT CLOSE FOR PEMKO FLAT TRACK SYSTEMS

For Pemko Designer Series Flat Track Sliding Door Hardware

Minimum Door Width Using Single Device 15".
22" Minimum Door Width When Using Dual Devices.

For doors weighing 88 - 132 lbs.	
ITEM #	DESCRIPTION
DSG-FT-05_/6-1411-1	DSG-FT-05_ 6' Single Soft Close Device
DSG-FT-05_/8-1411-1	DSG-FT-05_ 8' Single Soft Close Device
DSG-FT-05_/6-1411-2	DSG-FT-05_ 6' Dual Soft Close Devices
DSG-FT-05_/8-1411-2	DSG-FT-05_ 8' Dual Soft Close Devices
DSG-FT-06_/6-1411-1	DSG-FT-06_ 6' Single Soft Close Device
DSG-FT-06_/8-1411-1	DSG-FT-06_ 8' Single Soft Close Device
DSG-FT-06_/6-1411-2	DSG-FT-06_ 6' Dual Soft Close Devices
DSG-FT-06_/8-1411-2	DSG-FT-06_ 8' Dual Soft Close Devices

For doors weighing 133-176 lbs.	
ITEM #	DESCRIPTION
DSG-FT-05_/6-1413-1	DSG-FT-05_ 6' Single Soft Close Device
DSG-FT-05_/8-1413-1	DSG-FT-05_ 8' Single Soft Close Device
DSG-FT-05_/6-1413-2	DSG-FT-05_ 6' Dual Soft Close Devices
DSG-FT-05_/8-1413-2	DSG-FT-05_ 8' Dual Soft Close Devices
DSG-FT-06_/6-1413-1	DSG-FT-06_ 6' Single Soft Close Device
DSG-FT-06_/8-1413-1	DSG-FT-06_ 8' Single Soft Close Device
DSG-FT-06_/6-1413-2	DSG-FT-06_ 6' Dual Soft Close Devices
DSG-FT-06_/8-1413-2	DSG-FT-06_ 8' Dual Soft Close Devices

For doors weighing 177-240 lbs.	
ITEM #	DESCRIPTION
DSG-FT-05_/6-1418-1	DSG-FT-05_ 6' Single Soft Close Device
DSG-FT-05_/8-1418-1	DSG-FT-05_ 8' Single Soft Close Device
DSG-FT-05_/6-1418-2	DSG-FT-05_ 6' Dual Soft Close Devices
DSG-FT-05_/8-1418-2	DSG-FT-05_ 8' Dual Soft Close Devices
DSG-FT-06_/6-1418-1	DSG-FT-06_ 6' Single Soft Close Device
DSG-FT-06_/8-1418-1	DSG-FT-06_ 8' Single Soft Close Device
DSG-FT-06_/6-1418-2	DSG-FT-06_ 6' Dual Soft Close Devices
DSG-FT-06_/8-1418-2	DSG-FT-06_ 8' Dual Soft Close Devices

Copyright © 2015-2025, ASSA ABLOY Accessories and Door Controls Group, Inc., an ASSA ABLOY Group company. All rights reserved.
Reproduction in whole or in part without the express written permission of ASSA ABLOY Accessories and Door Controls Group, Inc. is prohibited.

SOFT CLOSE FOR PEMKO FLAT TRACK SYSTEMS

For Pemko Builders Series Flat Track Sliding Door Hardware

Minimum Door Width Using Single Device 15".
22" Minimum Door Width When Using Dual Devices.

For doors weighing 88 - 132 lbs.	
ITEM #	DESCRIPTION
BLD-FT-01_/6-1411-1	BLD-FT-01_ 6' Single Device
BLD-FT-01_/8-1411-1	BLD-FT-01_ 8' Single Device
BLD-FT-01_/6-1411-2	BLD-FT-01_ 6' Dual Devices
BLD-FT-01_/8-1411-2	BLD-FT-01_ 8' Dual Devices
BLD-FT-02_/6-1411-1	BLD-FT-02_ 6' Single Device
BLD-FT-02_/8-1411-1	BLD-FT-02_ 8' Single Device
BLD-FT-02_/6-1411-2	BLD-FT-02_ 6' Dual Devices
BLD-FT-02_/8-1411-2	BLD-FT-02_ 8' Dual Devices

For doors weighing 133-176 lbs.	
ITEM #	DESCRIPTION
BLD-FT-01_/6-1413-1	BLD-FT-01_ 6' Single Device
BLD-FT-01_/8-1413-1	BLD-FT-01_ 8' Single Device
BLD-FT-01_/6-1413-2	BLD-FT-01_ 6' Dual Devices
BLD-FT-01_/8-1413-2	BLD-FT-01_ 8' Dual Devices
BLD-FT-02_/6-1413-1	BLD-FT-02_ 6' Single Device
BLD-FT-02_/8-1413-1	BLD-FT-02_ 8' Single Device
BLD-FT-02_/6-1413-2	BLD-FT-02_ 6' Dual Devices
BLD-FT-02_/8-1413-2	BLD-FT-02_ 8' Dual Devices

For doors weighing 177-240 lbs.	
ITEM #	DESCRIPTION
BLD-FT-01_/6-1418-1	BLD-FT-01_ 6' Single Device
BLD-FT-01_/8-1418-1	BLD-FT-01_ 8' Single Device
BLD-FT-01_/6-1418-2	BLD-FT-01_ 6' Dual Devices
BLD-FT-01_/8-1418-2	BLD-FT-01_ 8' Dual Devices
BLD-FT-02_/6-1418-1	BLD-FT-02_ 6' Single Device
BLD-FT-02_/8-1418-1	BLD-FT-02_ 8' Single Device
BLD-FT-02_/6-1418-2	BLD-FT-02_ 6' Dual Devices
BLD-FT-02_/8-1418-2	BLD-FT-02_ 8' Dual Devices

SOFT CLOSE RETROFIT KITS

For Designer Series Systems	
ITEM #	DESCRIPTION
DSG1411-1_	Single Device 88-132 lbs.
DSG1411-2_	Dual Devices 88-132 lbs.
DSG1413-1_	Single Device 133-176 lbs.
DSG1413-2_	Dual Devices 133-176 lbs.
DSG1418-1_	Single Device 177-240 lbs.
DSG1418-2_	Dual Devices 177-240 lbs.

Finishes: add IS for Industrial Steel finish
add BSP for Black Suede finish
add SS for Stainless Steel finish

For Builders Series Systems	
ITEM #	DESCRIPTION
BLD1411-1_	Single Device 88-132 lbs.
BLD1411-2_	Dual Devices 88-132 lbs.
BLD1413-1_	Single Device 133-176 lbs.
BLD1413-2_	Dual Devices 133-176 lbs.
BLD1418-1_	Single Device 177-240 lbs.
BLD1418-2_	Dual Devices 177-240 lbs.

Finishes: add C for IS finish
add D for BSP finish

For Box Track Systems	
ITEM #	DESCRIPTION
SC1411-1	Single Device 88-132 lbs.
SC1411-2	Dual Devices 88-132 lbs.
SC1413-1	Single Device 133-176 lbs.
SC1413-2	Dual Devices 133-176 lbs.
SC1418-1	Single Device 177-240 lbs.
SC1418-2	Dual Devices 177-240 lbs.

SOFT CLOSE POCKET FRAME KIT

2x4 Wood or Metal Stud Constructed Walls	2x6 Wood Stud Constructed Walls	2x6 Metal Stud Constructed Walls	Net Door Size/s (The Kits can be trimmed in field)	Options
SC-PF28200A7284	SC-PF28200A7284-2X6	SC-PF28200A7284-SP6	2'6" x 6'8" - 3'0" x 7'0"	PFCD For Bi-Parting door openings
SC-PF28200A9696	SC-PF28200A9696-2X6	SC-PF28200A9696-SP6	4'0" x 7'0" - 4'0" x 8'0"	PFCD For Bi-Parting door openings

For Soft Close Kits	
ITEM #	DESCRIPTION
PFKIT-SC	Replacement Hardware for Soft close Kits

PEMKO
ASSA ABLOY
Experience a safer and more open world

800-824-3018 | www.pemko.com
Check the web site for the up-to-date catalog

Copyright © 2015-2025, ASSA ABLOY Accessories and Door Controls Group, Inc., an ASSA ABLOY Group company. All rights reserved. Reproduction in whole or in part without the express written permission of ASSA ABLOY Accessories and Door Controls Group, Inc. is prohibited.

RESIDENTIAL THRESHOLDS

CONTENTS:

Interlocking Thresholds and Caps 264
Interlocking Thresholds - Water Return 265
Interlocking Hooks 265
Adjustable Eco-V™ Top Thresholds 266
Eco-V™ Top Thresholds 266
Residential Saddles 266
Bumper Thresholds for Outswing Doors 267
Squareback Thresholds 267
Sill Nosings 268
Adjustable Aluminum Top Sills 269
Adjustable Oak Top Sills 270
Outswing Adjustable Oak Top Sills 271
Residential All-Aluminum Adjustable Sills 271
Fixed Eco-V™ Top Residential Sills 272
Residential All-Aluminum Fixed Sills 272
Outswing Fixed Bumper Sills 273
Extenders For All Residential Sills 273

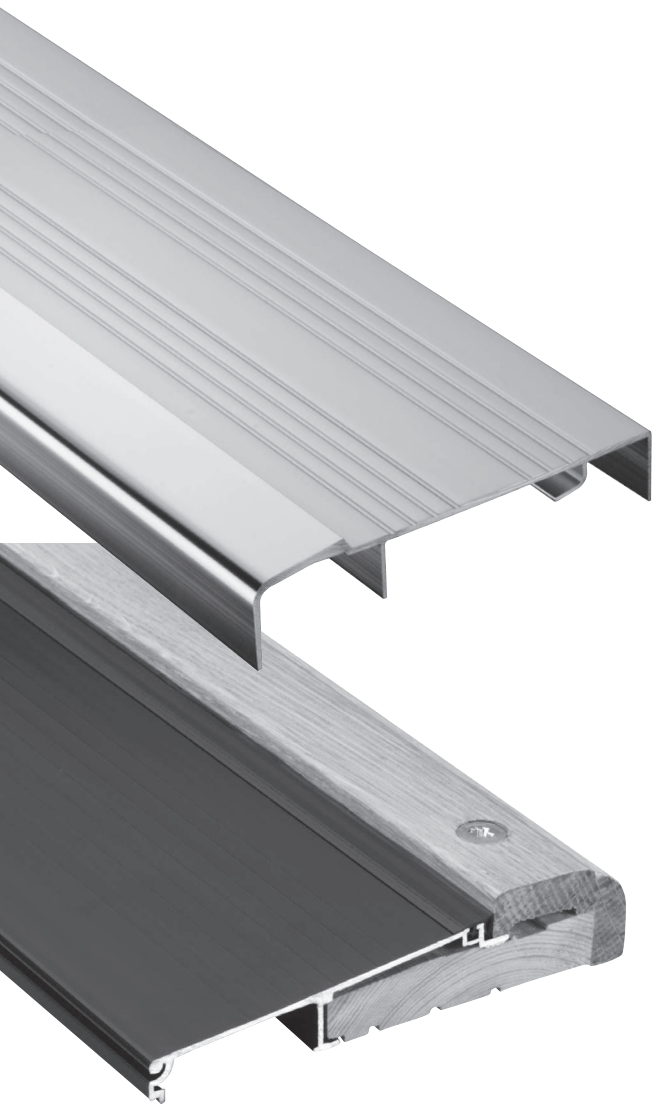

INDEX:

PRODUCT	PAGE
61	265
66	265
101	264
108	264
110	264
114	264
120	264
136	265
142	265
145	265
146	265
149	267
206	266
208	266
212	266
218	266
219	266
249	266
250	266
324	268
326	268
327	268
2051	267
2052	267
2053	267
2054	267
3261	268
8451	273
8452	273
74518	271
75518	271
84514	272
85514	272
94518	269
94518_W	270
95518	269
95518_W	270
EXT2	273
EXT3	273
EXT3/4	273
N85518	272
OS95518	271

Copyright © 2015-2025, ASSA ABLOY Accessories and Door Controls Group, Inc., an ASSA ABLOY Group company. All rights reserved.
Reproduction in whole or in part without the express written permission of ASSA ABLOY Accessories and Door Controls Group, Inc. is prohibited.

PEMKO
ASSA ABLOY
Experience a safer and more open world

INTERLOCKING THRESHOLDS

- All interlocking thresholds (including water return types) and caps are furnished with #61 hooks and nails
- For alternate hooks, see following page

114_

AVAILABLE FINISHES: A, B, D

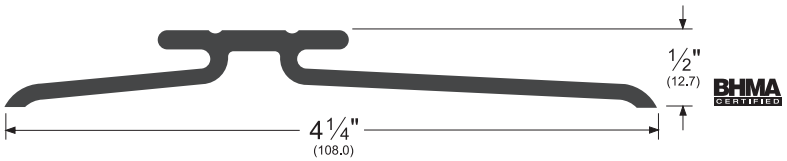

110_

AVAILABLE FINISHES: A, B, D

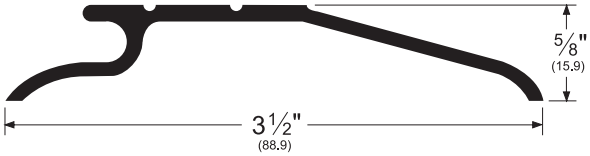

120_

AVAILABLE FINISHES: B

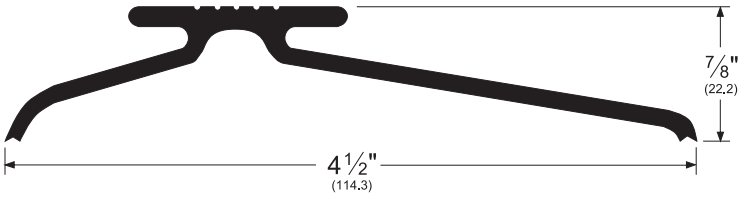

THRESHOLD CAPS

- Typically mounted on an existing saddle-type threshold to create an interlock with a J-hook or L-hook

101_

AVAILABLE FINISHES: A, B, D
ANSI: J34170

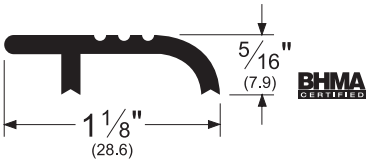

108_

AVAILABLE FINISH: B
ANSI: J14170

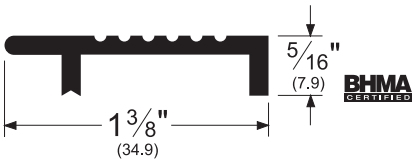

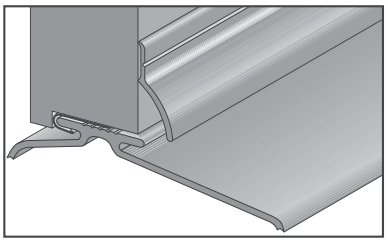

NOTE: Products shown in this section may not be drawn to scale.

AVAILABLE FINISHES FOR PRODUCTS SHOWN ON THIS PAGE
A (Mill Finish Aluminum) B (Mill Finish Extruded Bronze [Brass]) D (Dark Bronze Anodized)

Copyright © 2015-2025, ASSA ABLOY Accessories and Door Controls Group, Inc., an ASSA ABLOY Group company. All rights reserved. Reproduction in whole or in part without the express written permission of ASSA ABLOY Accessories and Door Controls Group, Inc. is prohibited.

INTERLOCKING THRESHOLDS - WATER RETURN

- Water return thresholds are designed to catch water which may blow or run under the door and return it to the outside through interior weep holes, down the sloped drain pan, and out exterior weep holes
- Product number for the aluminum water return pan is **PAN**
- Products are furnished with #61 hooks and nails

142_

AVAILABLE FINISHES: A, D

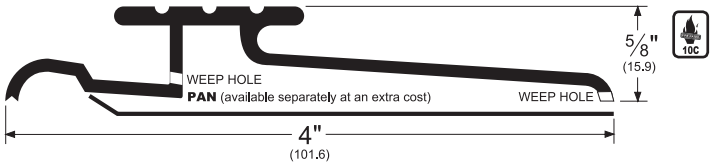

145_

AVAILABLE FINISHES: A, B, D

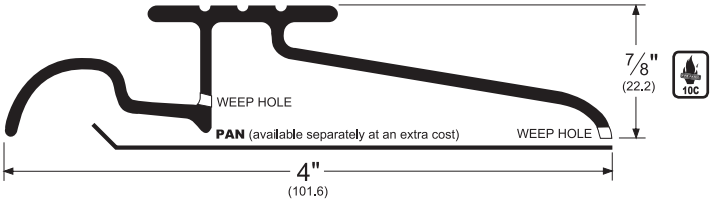

146_

AVAILABLE FINISHES: B

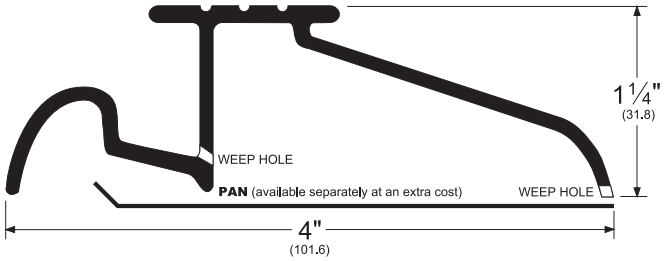

136_

AVAILABLE FINISHES: A, B, D

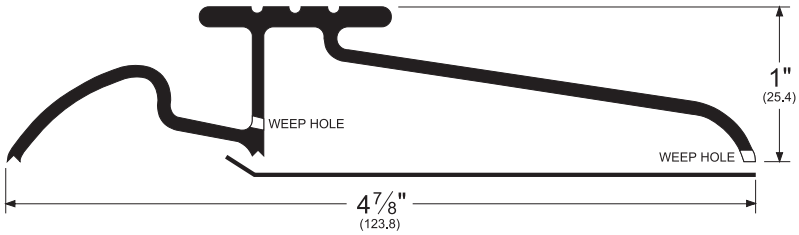

Hooks

- When installed properly on bottom of door, hooks interlock with threshold for a superior seal
- When substituting #66 hook for #61 hooks, price will be increased accordingly. Contact Pemko Customer Service

66_

AVAILABLE FINISHES: A

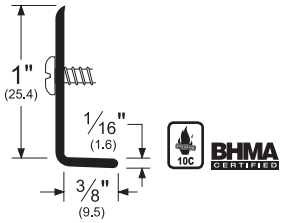

_61

AVAILABLE FINISHES: B, Z

.018 bronze

.015 steel

NOTE: B61 is roll form bronze metal

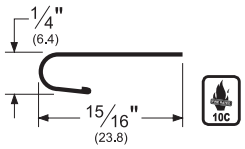

NOTE: Products shown in this section may not be drawn to scale.

AVAILABLE FINISHES FOR PRODUCTS SHOWN ON THIS PAGE
A (Mill Finish Aluminum) B (Mill Finish Extruded Bronze [Brass]) D (Dark Bronze Anodized)
For Hooks: B (Bronze) Z (Steel)

Copyright © 2015-2025, ASSA ABLOY Accessories and Door Controls Group, Inc., an ASSA ABLOY Group company. All rights reserved.
Reproduction in whole or in part without the express written permission of ASSA ABLOY Accessories and Door Controls Group, Inc. is prohibited.

PEMKO
ASSA ABLOY
Experience a safer and more open world

ADJUSTABLE ECO-V™ TOP THRESHOLDS

- Furnished with concealed, weather-sealed mounting screws and adjustment mechanism
- Eco-V™ seal adjusts to overcome swelling and/or shrinking of door and floor and eliminates need for shoe or sweep
- Furnished with Eco-V™ (**V**) insert. Gray replacement Eco-V™ is **PV64GR** (see Weatherization Products section)
- Eco-V™ replacement "foot" insert is **EV63GR**
- Pre-assembled for easy installation and adjustment

249_V

AVAILABLE FINISHES: A, D
AVAILABLE LENGTHS: **36", 72"**

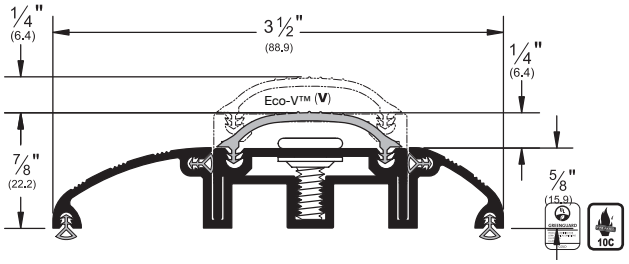

250_V

AVAILABLE FINISHES: A, D
AVAILABLE LENGTHS: **36", 72"**

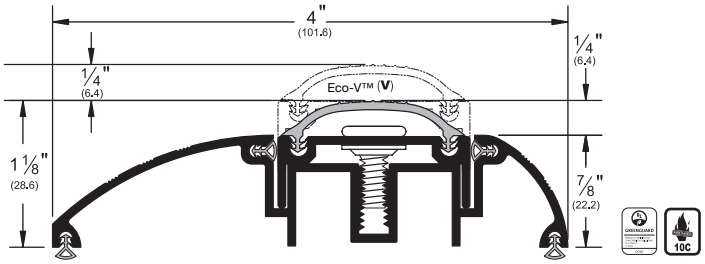

ECO-V™ TOP THRESHOLDS

- Eco-V™ (V) top creates a seal at the bottom of the door, eliminating the need for door sweeps or door shoes
- Eco-V™ feet replacement insert is **EV12GR**

206_V

AVAILABLE FINISHES: A, D
Gray replacement Eco-V™ is **EV22GR**
Black replacement Eco-V™ is **EV22BL**

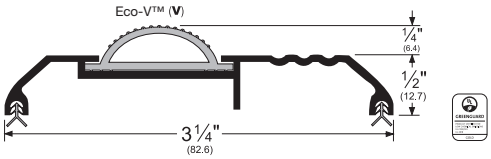

208_V

AVAILABLE FINISHES: A, D
Replacement Eco-V™ is **EV15BL or EV15GR**

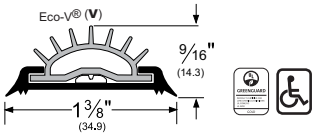

RESIDENTIAL SADDLES

- Use a door bottom shoe or sweep with these thresholds to seal out the elements
- Made of sturdy extruded aluminum
- Replacement Eco-V™ feet (where applicable) is **EV12GR**

212_

AVAILABLE FINISHES: A, D

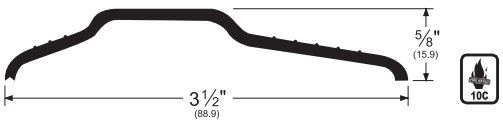

218_

AVAILABLE FINISHES: A, D, SN

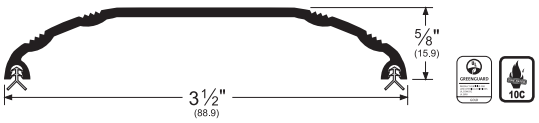

219_

AVAILABLE FINISHES: A, D, SN

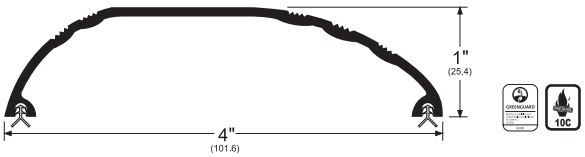

NOTE: Products shown in this section may not be drawn to scale.

AVAILABLE FINISHES FOR PRODUCTS SHOWN ON THIS PAGE
A (Mill Finish Aluminum) D (Dark Bronze Anodized) SN (Satin Nickel Anodized)

PEMKO
ASSA ABLOY
Experience a safer and more open world

800-824-3018 | www.pemko.com
Check the web site for the up-to-date catalog

Copyright © 2015-2025, ASSA ABLOY Accessories and Door Controls Group, Inc., an ASSA ABLOY Group company. All rights reserved. Reproduction in whole or in part without the express written permission of ASSA ABLOY Accessories and Door Controls Group, Inc. is prohibited.

BUMPER THRESHOLDS FOR OUTSWING DOORS

- In the closed position, the door butts up to bumper seal on threshold creating a seal against the elements

149_T

AVAILABLE FINISHES: A, D
REPLACEMENT INSERT: T5 (BL)

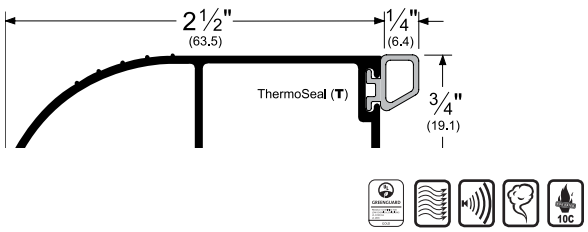

Alternate Insert For 149

149_P

AVAILABLE FINISHES: A, D
REPLACEMENT INSERT: P2 (BL, GR)

pile (P)

149_V

AVAILABLE FINISHES: A, D
REPLACEMENT INSERT: EV41 (BL, GR, W)

Eco-V™ (V)

2051_T

AVAILABLE FINISHES: A, D
REPLACEMENT INSERT: T5 (BL)

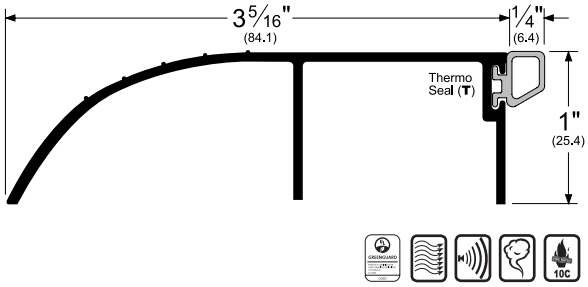

Alternate Insert For 2051

2051_P

AVAILABLE FINISHES: A, D
REPLACEMENT INSERT: P2 (BL, GR)

pile (P)

2051_V

AVAILABLE FINISHES: A, D
REPLACEMENT INSERT: EV41 (BL, GR, W)

Eco-V™ (V)

SQUAREBACK THRESHOLDS

- Replacement Eco-V™ feet (where applicable) is **EV12GR**
- Interior support leg flushes with interior jamb in application, allowing flooring to squarely abut threshold
- Ideal for tall terra cotta, plush carpet or stone paver entry applications for smooth transition
- Gently sloping and ribbed exterior ramp eliminates trip hazard while providing maximum rain guard. (Be sure to caulk all support legs or lay in mastic for best seal)
- Center support leg provides for engineered threshold stability

2052_

AVAILABLE FINISHES: A, D

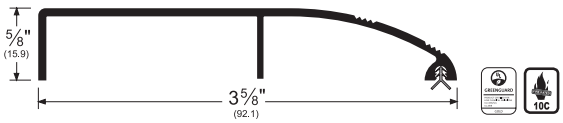

2053_

AVAILABLE FINISHES: A, D

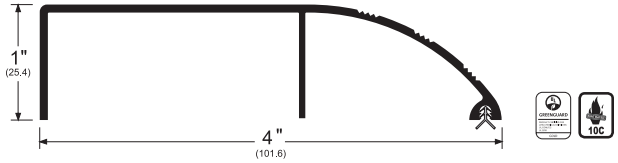

2054_

AVAILABLE FINISHES: A, D

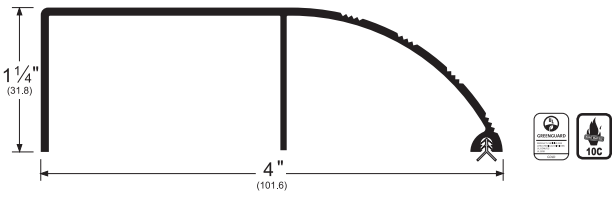

NOTE: Products shown in this section may not be drawn to scale.

AVAILABLE FINISHES FOR PRODUCTS SHOWN ON THIS PAGE
A (Mill Finish Aluminum) D (Dark Bronze Anodized)

Copyright © 2015-2025, ASSA ABLOY Accessories and Door Controls Group, Inc., an ASSA ABLOY Group company. All rights reserved.
Reproduction in whole or in part without the express written permission of ASSA ABLOY Accessories and Door Controls Group, Inc. is prohibited.

PEMKO
ASSA ABLOY
Experience a safer and more open world

SILL NOSINGS

- Used to cover concrete or wood sill
- Provides an attractive finished look to new and old door openings, covering defects in existing sill
- Sill nosings are held in place with mastic and pressure from threshold placement

324_

AVAILABLE FINISHES: A, B, D

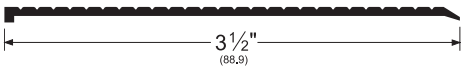

326_

AVAILABLE FINISHES: A, B, D, SN

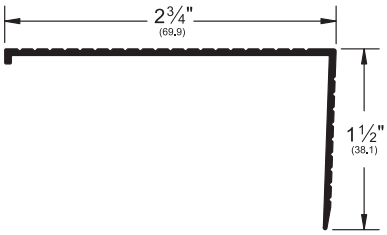

3261_

AVAILABLE FINISHES: A, D, SN

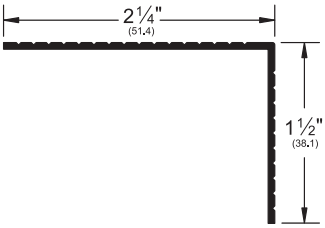

327_

AVAILABLE FINISHES: A, D, SN

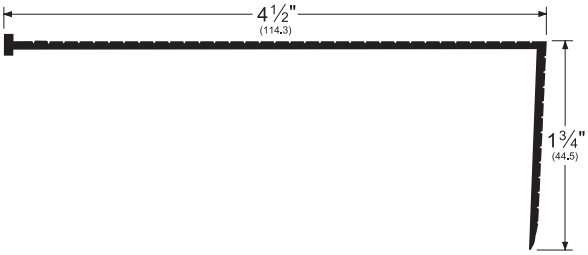

NOTE: Products shown in this section may not be drawn to scale.

AVAILABLE FINISHES FOR PRODUCTS SHOWN ON THIS PAGE

A (Mill Finish Aluminum) B (Mill Finish Extruded Bronze [Brass]) D (Dark Bronze Anodized Aluminum) PW (Painted White Aluminum) SN (Satin Nickel Anodized Aluminum) OAK (Natural Unfinished Oak) W (Solid Oak)

Copyright © 2015-2025, ASSA ABLOY Accessories and Door Controls Group, Inc., an ASSA ABLOY Group company. All rights reserved. Reproduction in whole or in part without the express written permission of ASSA ABLOY Accessories and Door Controls Group, Inc. is prohibited.

RESIDENTIAL MILLWORK SILLS

- Sills for use with standard 4⅝" jamb width with easy snap-on extention for jambs as wide as 8¾"
- For fabrication options for adjustable or fixed substrate sills, such as horning or sidelite mullion notching, contact Pemko Customer Service
- Residential Sills are designed specifically for the pre-hung door market. They are furnished un-drilled and without screws or nails
- Adjustable up to ¼" to compensate for uneven door bottoms and sub-sill level changes. Two-part zinc plated steel stud shoulder screw joins a long-barreled, zinc plated steel T-nut for superior stability and long-lasting reliability
- PemkoPrene (**PK**) moisture barrier prevents water intrusion. Design of PemkoPrene (**PK**) bulb configuration keeps constant pressure between aluminum cap and aluminum extrusion at any level of adjustment (bulb shown compressed). Replacement insert is **PK74BL**
- Available in standard sizes 32.5", 36.5", and 73.75"

ADJUSTABLE ALUMINUM TOP SILLS

94518_

AVAILABLE FINISHES: A, D

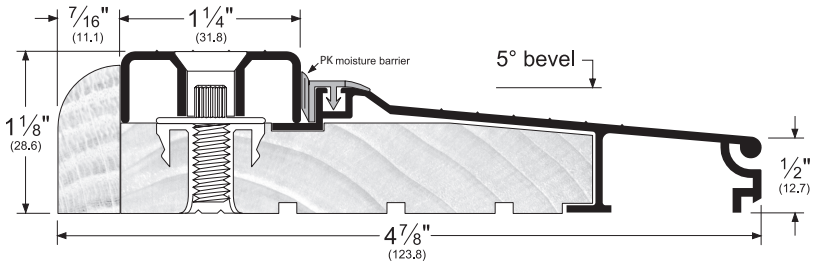

Add "NT" to the end of product number to order narrow trim (i.e. **94518A36.5NT**).

Full width of sill changes from 4⅞" to 4¹¹/₁₆".

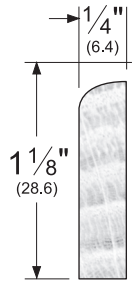

95518_

AVAILABLE FINISHES: A, D

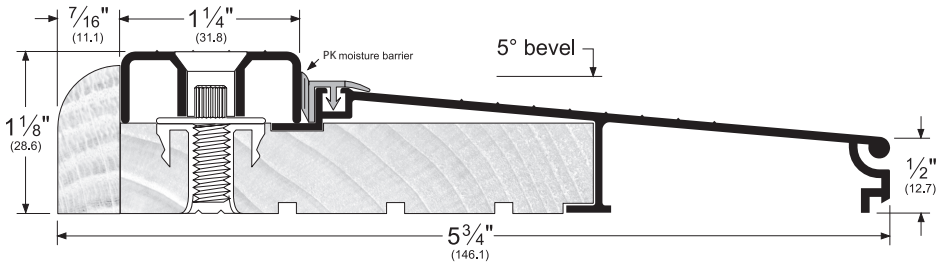

Add "NT" to the end of product number to order narrow trim (i.e. **95518A36.5NT**). Full width of sill changes from 5¾" to 5⁹/₁₆".

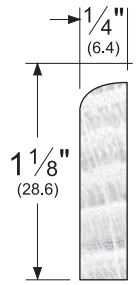

NOTE: Products shown in this section may not be drawn to scale.

AVAILABLE FINISHES FOR PRODUCTS SHOWN ON THIS PAGE
A (Mill Finish Aluminum) D (Dark Bronze Anodized)

Copyright © 2015-2025, ASSA ABLOY Accessories and Door Controls Group, Inc., an ASSA ABLOY Group company. All rights reserved.
Reproduction in whole or in part without the express written permission of ASSA ABLOY Accessories and Door Controls Group, Inc. is prohibited.

PEMKO
ASSA ABLOY
Experience a safer and more open world

ADJUSTABLE OAK TOP SILLS

94518_W

AVAILABLE FINISHES: A, D

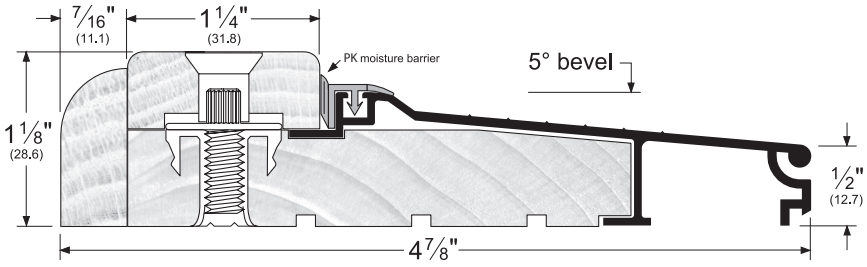

Add "NT" to the end of product number to order narrow trim (i.e. **94518AW36.5NT**).

Full width of sill changes from $4\frac{7}{8}$" to $4\frac{11}{16}$".

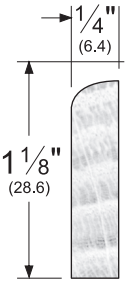

95518_W

AVAILABLE FINISHES: A, D

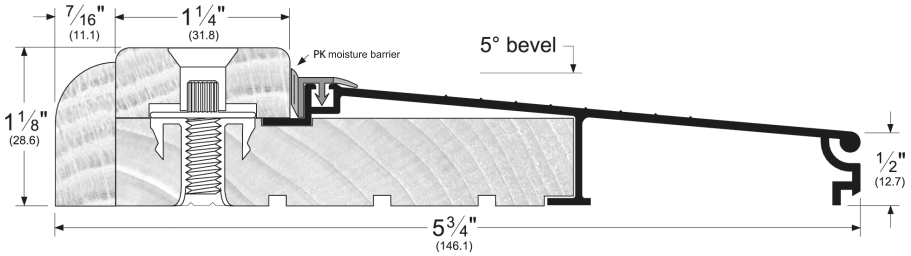

Add "NT" to the end of product number to order narrow trim (i.e. **95518AW36.5NT**).

Full width of sill changes from $5\frac{3}{4}$" to $5\frac{9}{16}$".

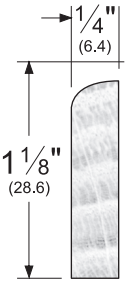

NOTE: Products shown in this section may not be drawn to scale.

AVAILABLE FINISHES FOR PRODUCTS SHOWN ON THIS PAGE
A (Mill Finish Aluminum) D (Dark Bronze Anodized)

PEMKO
ASSA ABLOY
Experience a safer and more open world

Copyright © 2015-2025, ASSA ABLOY Accessories and Door Controls Group, Inc., an ASSA ABLOY Group company. All rights reserved. Reproduction in whole or in part without the express written permission of ASSA ABLOY Accessories and Door Controls Group, Inc. is prohibited.

OUTSWING ADJUSTABLE OAK TOP SILLS

OS95518_W

AVAILABLE FINISHES: A, D

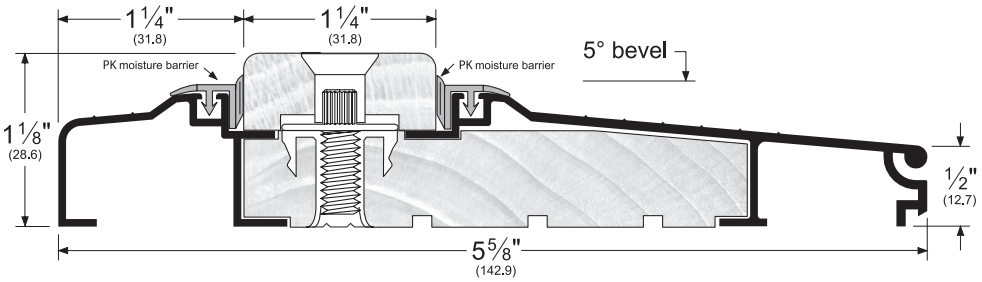

RESIDENTIAL ALL-ALUMINUM ADJUSTABLE SILLS

74518_

AVAILABLE FINISHES: A, D

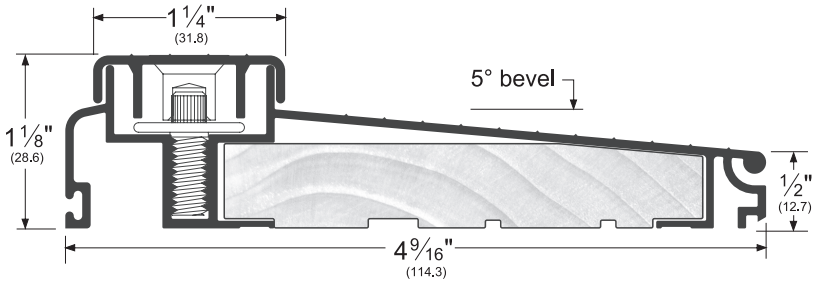

75518_

AVAILABLE FINISHES: A, D

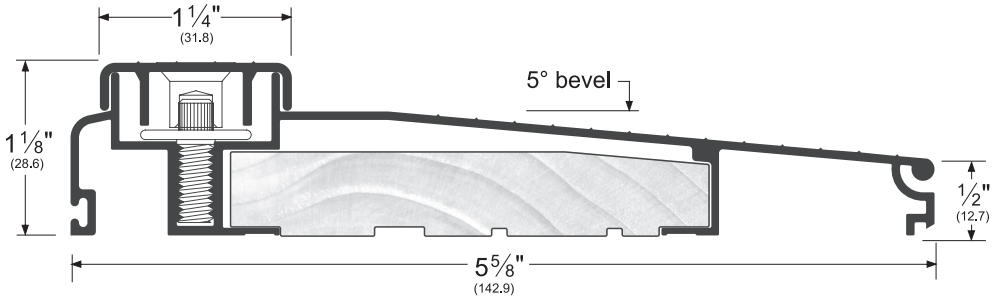

NOTE: Products shown in this section may not be drawn to scale.

AVAILABLE FINISHES FOR PRODUCTS SHOWN ON THIS PAGE
A (Mill Finish Aluminum) D (Dark Bronze Anodized)

Copyright © 2015-2025, ASSA ABLOY Accessories and Door Controls Group, Inc., an ASSA ABLOY Group company. All rights reserved.
Reproduction in whole or in part without the express written permission of ASSA ABLOY Accessories and Door Controls Group, Inc. is prohibited.

PEMKO
ASSA ABLOY
Experience a safer and more open world

FIXED ECO-V™ TOP RESIDENTIAL SILLS

- Fixed rigid Eco-V™ (V) cap includes ratchet lock feature which prevents moisture penetration and securely fastens Eco-V™ to aluminum extrusion

N85518_V

AVAILABLE FINISHES: A

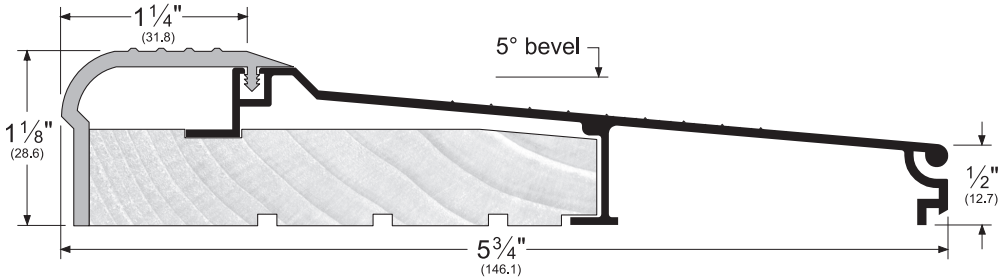

RESIDENTIAL ALL-ALUMINUM FIXED SILLS

84514_

AVAILABLE FINISHES: A, D

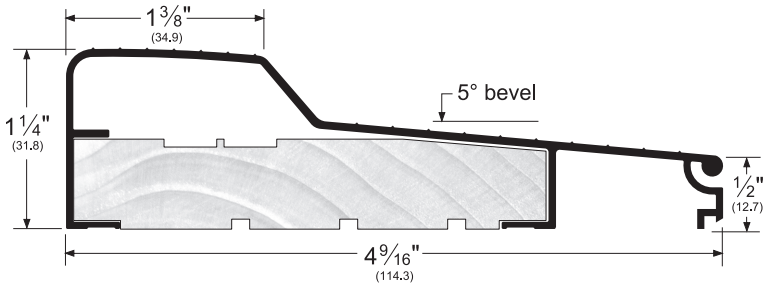

85514_

AVAILABLE FINISHES: A, D

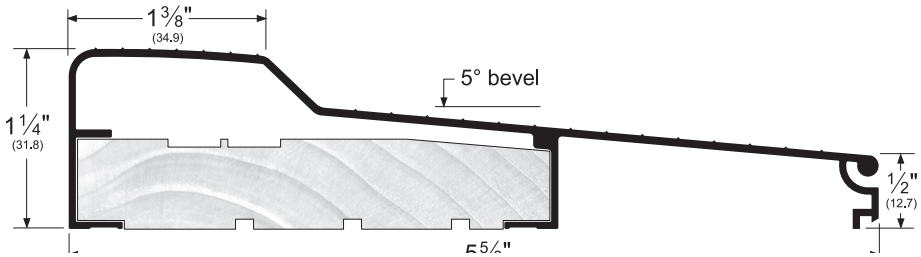

NOTE: Products shown in this section may not be drawn to scale.

AVAILABLE FINISHES FOR PRODUCTS SHOWN ON THIS PAGE
A (Mill Finish Aluminum) D (Dark Bronze Anodized)

Copyright © 2015-2025, ASSA ABLOY Accessories and Door Controls Group, Inc., an ASSA ABLOY Group company. All rights reserved. Reproduction in whole or in part without the express written permission of ASSA ABLOY Accessories and Door Controls Group, Inc. is prohibited.

OUTSWING FIXED BUMPER SILLS

- High dam design restricts water intrusion
- Supplied with high quality Q103 (Q) kerf-in seal
- 8452_Q is extendable to interior

8451_Q

AVAILABLE FINISHES: A, D

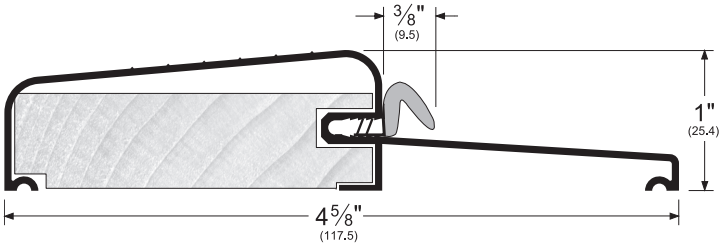

8452_Q

AVAILABLE FINISHES: A, D

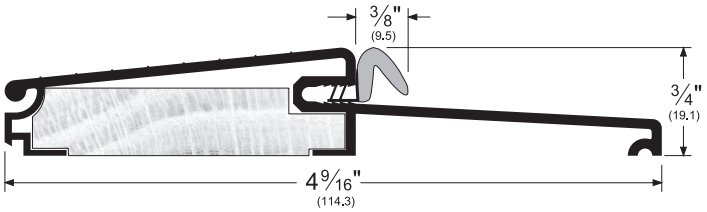

EXTENDERS FOR ALL RESIDENTIAL SILLS

- Extenders fit all 4 7/8" wide and 5 3/4" wide extrusions
- Extenders are available for jambs as wide as 8 3/4"
- Not for use with 8451_Q

EXT3/4_

AVAILABLE FINISHES
A, D

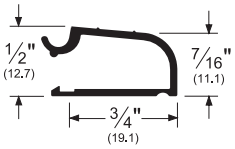

EXT2_

AVAILABLE FINISHES:
A, D

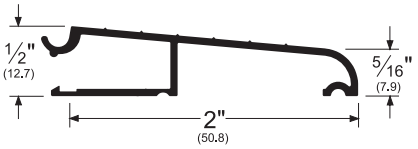

EXT3_

AVAILABLE FINISHES:
A, D

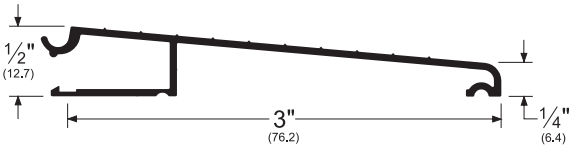

NOTE: Products shown in this section may not be drawn to scale.

AVAILABLE FINISHES FOR PRODUCTS SHOWN ON THIS PAGE
A (Mill Finish Aluminum) D (Dark Bronze Anodized)
For Kerf Gasket: BL (Black) W (White)

Copyright © 2015-2025, ASSA ABLOY Accessories and Door Controls Group, Inc., an ASSA ABLOY Group company. All rights reserved.
Reproduction in whole or in part without the express written permission of ASSA ABLOY Accessories and Door Controls Group, Inc. is prohibited.

PEMKO
ASSA ABLOY
Experience a safer and more open world

800-824-3018 | www.pemko.com
Check the web site for the up-to-date catalog

Copyright © 2015-2025, ASSA ABLOY Accessories and Door Controls Group, Inc., an ASSA ABLOY Group company. All rights reserved.
Reproduction in whole or in part without the express written permission of ASSA ABLOY Accessories and Door Controls Group, Inc. is prohibited.

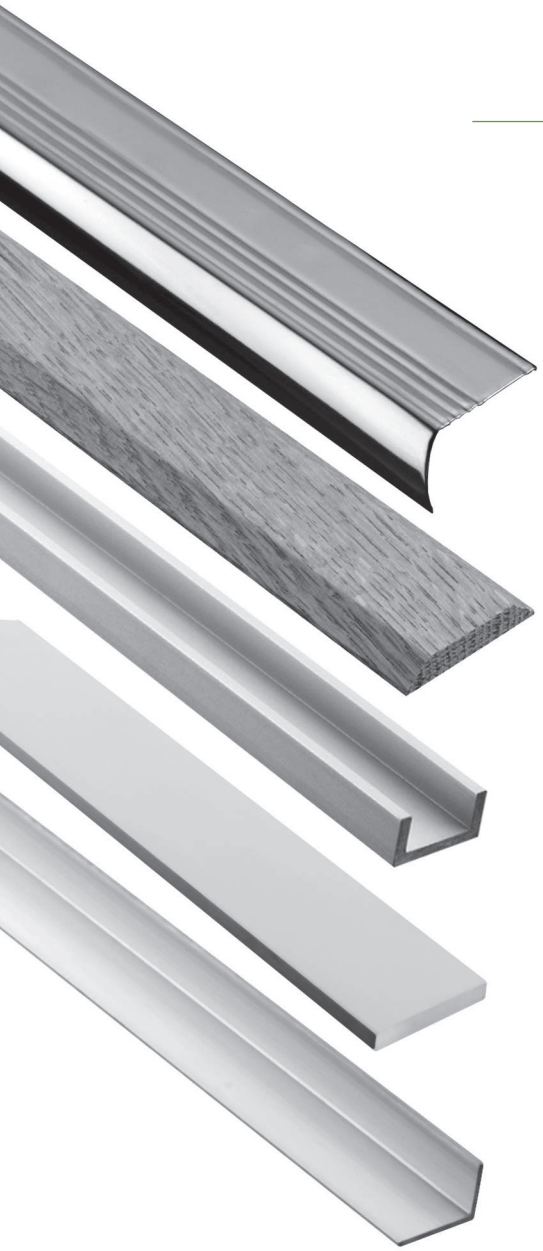

FLOOR MOLDING, TRIM & HANDYSHAPES™

CONTENTS:

Carpet Bar and Seam Binding.....276
Stair Nosing.....276
Oak Seam Binding, Floor Edging, and Carpet Trim.....276

INDEX:

PRODUCT	PAGE	PRODUCT	PAGE
2120	276	2219	276
2132W	276	2219W	276
2134	276		

800-824-3018 | www.pemko.com

Check the web site for the up-to-date catalog

Copyright © 2015-2025, ASSA ABLOY Accessories and Door Controls Group, Inc., an ASSA ABLOY Group company. All rights reserved.
Reproduction in whole or in part without the express written permission of ASSA ABLOY Accessories and Door Controls Group, Inc. is prohibited.

PEMKO
ASSA ABLOY

Experience a safer and more open world

CARPET BAR - STANDARD

- Carpet Bars protect and provide a neat trim for the edge of carpet

2134_

AVAILABLE FINISHES: **A, G**
AVAILABLE LENGTHS: **36", 72"**
Provided with drive nails

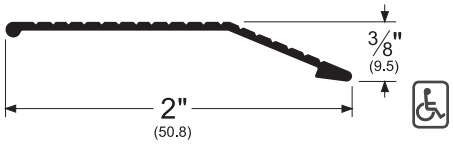

Typical Installation

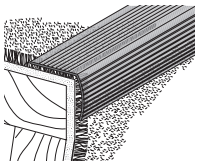

2120_ shown installed

SEAM BINDING

- Covers seams and joins in linoleum, tile, carpet, and other floor coverings

2219_

AVAILABLE FINISHES: **A, G**
AVAILABLE LENGTHS: **36", 72"**
Provided with drive nails

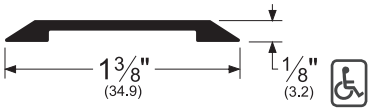

OAK CARPET TRIM

- Covers and protects carpet edges or seams between two surfaces
- Oak is provided unfinished with countersunk holes and brass plated screws

2132W

AVAILABLE FINISH: **W**
AVAILABLE LENGTHS: **36", 72"**

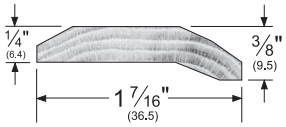

STAIR NOSING

- Protects and improves the appearance of stair edges

2120_

AVAILABLE FINISHES: **A, G**
AVAILABLE LENGTHS: **36", 72"**
Provided with drive nails
Ribbed top surface and fluted face

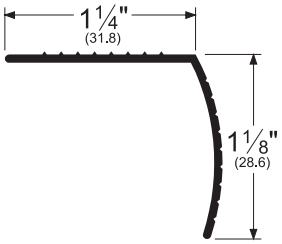

OAK SEAM BINDING

- Oak Seam Binding covers seams between wood, tile, linoleum and other surfaces
- Oak is provided unfinished with countersunk holes and brass plated screws

2219W

AVAILABLE LENGTHS: **36", 72"**

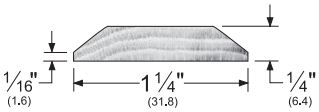

AVAILABLE FINISHES FOR PRODUCTS SHOWN ON THIS PAGE
A (Mill Finish Aluminum) **G** (Gold Anodized) **W** (Solid Oak)

Copyright © 2015-2025, ASSA ABLOY Accessories and Door Controls Group, Inc., an ASSA ABLOY Group company. All rights reserved. Reproduction in whole or in part without the express written permission of ASSA ABLOY Accessories and Door Controls Group, Inc. is prohibited.

PEMKO WEATHERIZATION PRODUCTS

CONTENTS:

Foam Tape 278
Neoprene Tape 278
Miscellaneous Tape 279
Spring Bronze Weatherstrip 279
Garage Door Weatherstrip 279

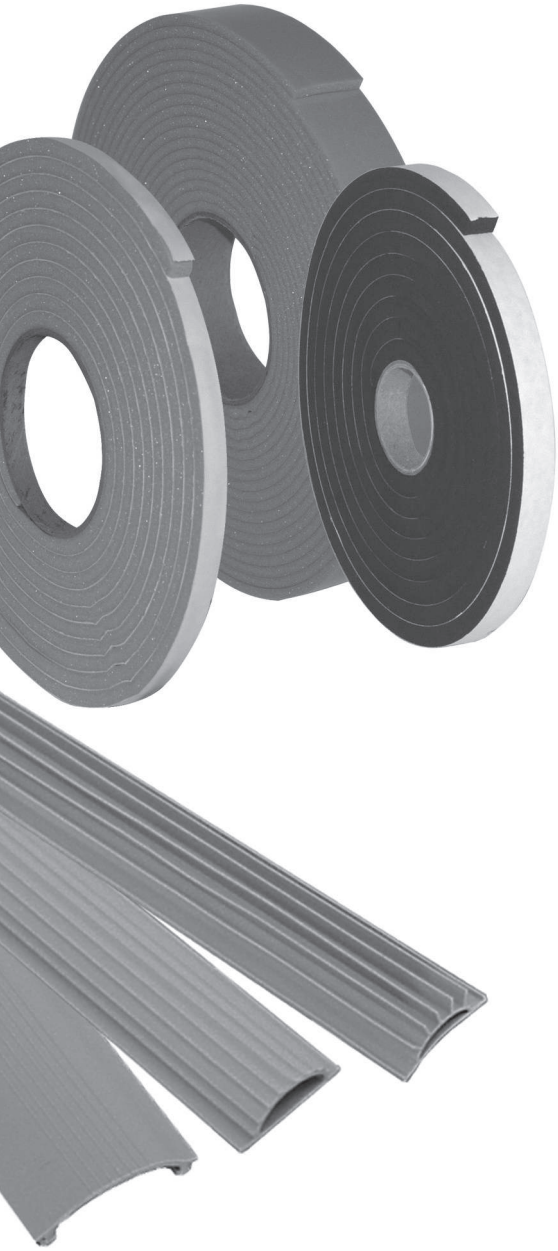

INDEX:

PRODUCT	PAGE
P51B17	279
P240	278
P241	278
P241-30	278
P242	278
P243	278
P244	278
P260	278
P261	278
P262	278
P263	278
P265	278
P266	278

PRODUCT	PAGE
P364R16	279
P365V16	279
P380	279
P381	279
P382	279
P384	279
P385	278
P386	278
P387	279
P388	279
P390	278
P391	278
P392	278

PRODUCT	PAGE
P393	278
P396	278
P397	278
P480	279
P484	279
P490	278
P491	278
P493	278
P497	278

800-824-3018 | www.pemko.com

Check the web site for the up-to-date catalog

Copyright © 2015-2025, ASSA ABLOY Accessories and Door Controls Group, Inc., an ASSA ABLOY Group company. All rights reserved.
Reproduction in whole or in part without the express written permission of ASSA ABLOY Accessories and Door Controls Group, Inc. is prohibited.

PEMKO
ASSA ABLOY

Experience a safer and more open world

OPEN CELL POLYURETHANE FOAM TAPE

- Easily compressible self-adhesive weatherstrip

Product #	Color	Thickness (T)		Width (W)		Length
P390	Gray	3/16"	x	3/8"	x	17'
P391	White	1/4"	x	3/8"	x	17'
P392	Gray	3/8"	x	3/8"	x	17'
P393	Gray	1/2"	x	1/2"	x	17'
P396	Charcoal	1/4"	x	1/2"	x	17'
P397	White	1/8"	x	3/8"	x	17'

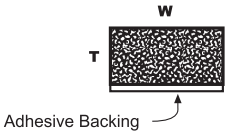

Suggested Installation

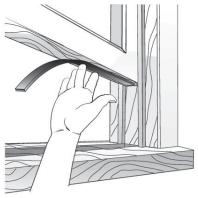

Open Cell Foam Tape installed on casement window.

CLOSED CELL SOFT PVC FOAM TAPE

- Flexible, conformable, and softly compressible self-adhesive weatherstrip
- Highly resilient: resists ultraviolet, oxygen and moture degradation
- Seals against air and water, around doors and windows

Product #	Color	Thickness (T)		Width (W)		Length
P240	Gray	1/8"	x	1/4"	x	17'
P241	Gray	3/16"	x	3/8"	x	17'
P241-30	Gray	3/16"	x	3/8"	x	30'
P242	Gray	1/4"	x	3/8"	x	17'
P243	Gray	3/8"	x	3/8"	x	17'
P244	Gray	3/8"	x	3/4"	x	17'

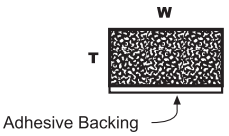

Suggested Installation

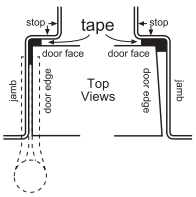

Top view of **Closed Cell PVC Soft Foam Tape** installed on door opening.

CLOSED CELL FIRM PVC FOAM TAPE

- Moderately compressible self-adhesive weatherstrip

Product #	Color	Thickness (T)		Width (W)		Length
P260	Black	1/8"	x	1/4"	x	17'
P261	Black	3/16"	x	3/8"	x	17'
P262	Black	3/16"	x	3/4"	x	17'
P263	Black	5/16"	x	3/8"	x	10'
P265	Black	7/16"	x	3/8"	x	10'
P266	Black	7/16"	x	3/4"	x	10'
P385	Gray	1/4"	x	1/2"	x	10'
P386	Gray	1/4"	x	3/4"	x	10'

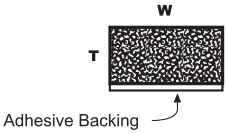

Suggested Installation

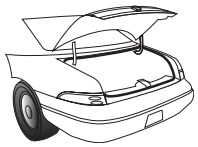

Closed Cell PVC Firm Foam Tape installed as car trunk weatherstrip.

EPDM SPONGE NEOPRENE TAPE

- Slightly compressible self-adhesive weatherstrip
- Resists deterioration and remains flexible at sub-zero temperatures
- Superior product for weatherstripping doors, windows, hatchways, lids and covers

Product #	Color	Thickness (T)		Width (W)		Length
P490	Gray	1/8"	x	3/8"	x	10'
P491	Gray	1/4"	x	3/8"	x	10'
P493	Gray	1/4"	x	1/2"	x	10'
P497	Gray	1/4"	x	3/4"	x	10'

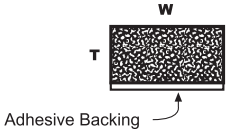

Suggested Installation

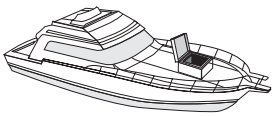

EPDM Sponge Neoprene Tape installed as boat hatch weatherstrip

PEMKO
ASSA ABLOY

Experience a safer and more open world

800-824-3018 | www.pemko.com
Check the web site for the up-to-date catalog

Copyright © 2015-2025, ASSA ABLOY Accessories and Door Controls Group, Inc., an ASSA ABLOY Group company. All rights reserved. Reproduction in whole or in part without the express written permission of ASSA ABLOY Accessories and Door Controls Group, Inc. is prohibited.

CLOSED CELL SPONGE NEOPRENE TAPE

- Superior product for weatherstripping homes, cars, trucks and boats
- Resists deterioration from oily substances
- Remains flexible at high and low temperatures

Product #	Color	Thickness (T)		Width (W)		Length
P380	Black	3/16"	x	3/8"	x	10'
P381	Black	5/16"	x	3/8"	x	10'
P382	Black	5/16"	x	3/4"	x	10'
P384	Black	7/16"	x	3/4"	x	10'
P387	Black	3/16"	x	3/4"	x	10'
P388	Black	5/16"	x	1/2"	x	10'
P484	Black	7/16"	x	3/8"	x	10'

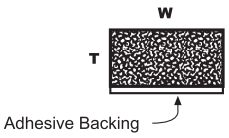

Suggested Installation

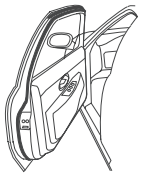

Closed Cell Sponge Neoprene Tape installed as car door weatherstrip.

CLOSED CELL SPONGE VINYL CAMPER TAPE

- Mylar-backed tape cushions between camper and truck

Product #	Color	Thickness (T)		Width (W)		Length
P480	Gray	3/16"	x	1 1/4"	x	30'

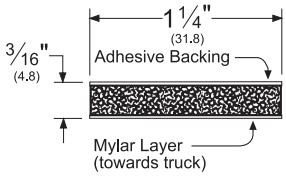

Suggested Installation

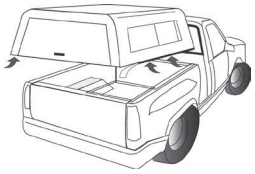

Sponge Vinyl Camper Tape installed as seal between camper and truck bed

SPRING BRONZE WEATHERSTRIP

- For use on wood doors and wood casement windows
- .008" hemmed spring bronze (brass)
- Packaged with nails. Nails should be approximately 1 1/2" on center

Product #	Material	Width		Length
P51B17	Bronze	1 1/8"	x	17'

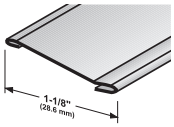

GARAGE DOOR WEATHERSTRIP

- All garage door weatherstrips are furnished with roofing nails

Product #	Color	Height		Width		Length
P364R16	Black	3/4"	x	2 1/4"	x	16'
P365V16	Gray	1 3/4"	x	5/8"	x	16'

P364R16

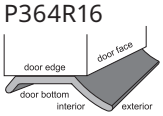

- Nails to door bottom, closing gaps up to 5/8"

P365V16

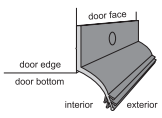

- Nails to door edge, bottom or face, closing gaps up to 1 3/4"

Copyright © 2015-2025, ASSA ABLOY Accessories and Door Controls Group, Inc., an ASSA ABLOY Group company. All rights reserved.
Reproduction in whole or in part without the express written permission of ASSA ABLOY Accessories and Door Controls Group, Inc. is prohibited.

PEMKO
ASSA ABLOY
Experience a safer and more open world

800-824-3018 | www.pemko.com
Check the web site for the up-to-date catalog

Copyright © 2015-2025, ASSA ABLOY Accessories and Door Controls Group, Inc., an ASSA ABLOY Group company. All rights reserved.
Reproduction in whole or in part without the express written permission of ASSA ABLOY Accessories and Door Controls Group, Inc. is prohibited.

PEMKO FIRE GLAZING TAPE



CONTENTS:

Fire Glazing Tape 282
Fire Glazing Tape Applications 283

INDEX:

PRODUCT	PAGE	PRODUCT	PAGE
FG3000S45	282	FG3000S90	282
FG3000S45	283	FG3000S90	286
FG3000S45	284	FG3000S90	287
FG3000S45	285	HSS2000	287
FG3000S45	288		

800-824-3018 | www.pemko.com

Check the web site for the up-to-date catalog

Copyright © 2015-2025, ASSA ABLOY Accessories and Door Controls Group, Inc., an ASSA ABLOY Group company. All rights reserved.
Reproduction in whole or in part without the express written permission of ASSA ABLOY Accessories and Door Controls Group, Inc. is prohibited.

PEMKO
ASSA ABLOY

Experience a safer
and more open world

FIRE GLAZING TAPE

- Verify all applications with your door and/or frame manufacturer
- **FG3000S45** and **FG3000S90** are specially formulated high-performance fire glazing tapes
- For exterior fire-rated applications, seal against moisture using standard industry methods

FG3000S45

AVAILABLE LENGTHS: **7', 8', 14', 16'**

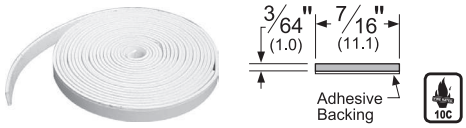

Color: White

FG3000S90

AVAILABLE LENGTHS: **8', 16'**

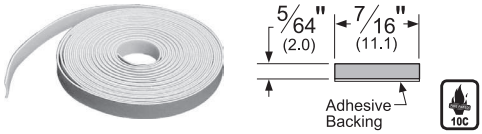

Color: White

Fire Glazing Tape in Larger Lite Applications

Single Vision Lites (Wood/Hollow Metal Door) 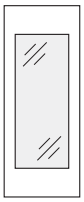	Maximum Height: 84" Maximum Width: 34" Maximum Total Square Inches (Visible Glass Area): 2,856	• In 20-, 45-, 60- and 90-minute rated wood and hollow metal doors with metal vision frames, the use of FG3000 fire glazing tape allows for much larger vision lites • In 20- and 45-minute rated hollow metal screens, the use of FG3000 fire glazing tape allows for much larger sidelites, borrowed lites and glass transoms • New allowable visible glass areas for vision lites in 20- and 45-minute rated wood and hollow metal doors with FG3000S45 is 2,856 square inches with a maximum height of 84" and a maximum width of 34"
Multiple Vision Lites (Hollow Metal Door) 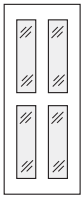	Maximum Height (Each Lite): 12" Maximum Width (Each Lite): 46" Maximum Combined Square Inches (All Visible Glass Areas): 2,208	• For 90-minute hollow metal doors with **FG3000** fire glazing tape, 12" x 46" vision lites are allowed, but the total number of lites must not exceed four (4) per door. The combined total visible glass area allowed is 2208 square inches

Copyright © 2015-2025, ASSA ABLOY Accessories and Door Controls Group, Inc., an ASSA ABLOY Group company. All rights reserved. Reproduction in whole or in part without the express written permission of ASSA ABLOY Accessories and Door Controls Group, Inc. is prohibited.

FG3000S45 FIRE GLAZING TAPE IN 20- AND 45-MINUTE HOLLOW METAL FRAME (SCREEN)

Sidelite/Borrowed Lite/Transom Lite Applications

- Verify all applications with your door and/or frame manufacturer
- For exterior fire-rated applications, a clear silicone caulk is recommended for water proofing

FG3000S45

AVAILABLE LENGTHS: **7', 8', 14', 16'**

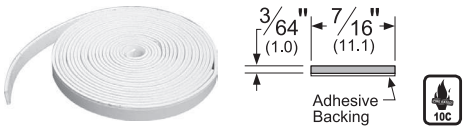

Color: White

Sectional View of Application

Hollow metal frame for a sidelite, borrowed lite or transom condition.

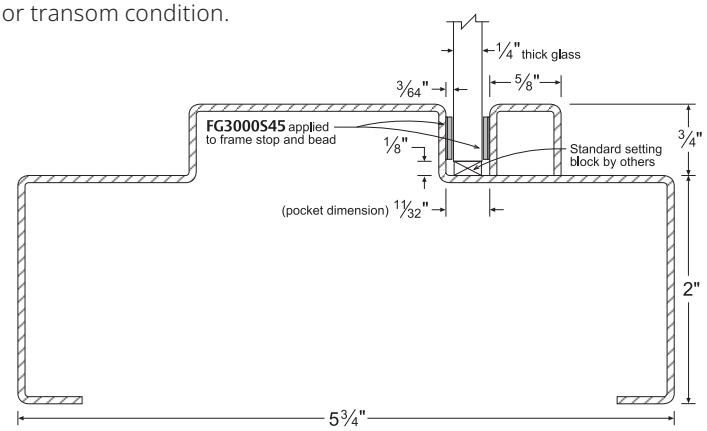

Technical Data for 20- And 45-Minute Hollow Metal Screens Equipped with FG3000S45 (Sidelite/Borrowed Lite/Transom Lite Applications)

Lite Configurations

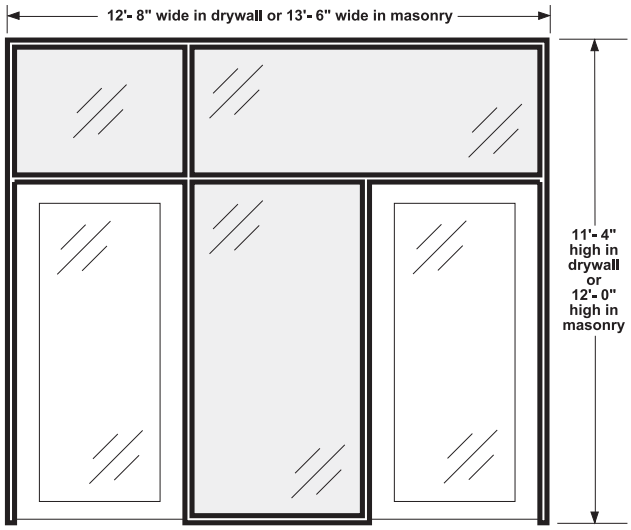

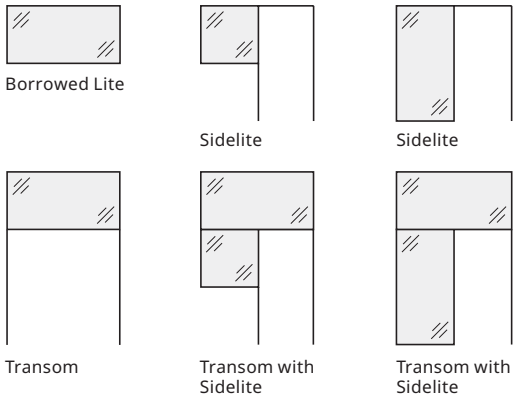

The maximum visible glass area allowed for side lites, borrowed lites, and glass transoms is 4,704 square inches with a maximum length of 106" in any one direction.

Lite Specifications	Hollow Metal Screen Specifications	Listing/Labeling Specifications
Maximum Lite Size: 106" In Any One Direction **Maximum Lite Combined Square Inches:** Not To Exceed 4,704	**Maximum Dimensions (Drywall):** 12'8" X 11'4" **Maximum Dimensions (Masonry):** 13'6" X 12'0" **Metal Requirements:** Frames are restricted to a minimum of 16-gauge with 5/8" high stops and 18-gauge glazing bead with #8 fasteners at 9" maximum centers	• Door and frame must be manufactured by companies that are classified by **Underwriters Laboratories Inc.®** for the manufacturing and labeling of hollow metal fire doors. **Warnock Hersey (I.T.S.)** listings are also available through participating hollow metal manufacturers • Listed Glazing Products include: – **Wire Glazing:** Pilkington, Asahi and Central Glass • All vision lite kits must be listed fire door glass frames, packaged with **FG3000S45** or **FG3000S90** • Individual door and frame manufacturers' modification procedures may vary slightly from the size listings shown

Copyright © 2015-2025, ASSA ABLOY Accessories and Door Controls Group, Inc., an ASSA ABLOY Group company. All rights reserved.
Reproduction in whole or in part without the express written permission of ASSA ABLOY Accessories and Door Controls Group, Inc. is prohibited.

PEMKO
ASSA ABLOY
Experience a safer and more open world

FG3000S45 FIRE GLAZING TAPE IN 20- AND 45-MINUTE HOLLOW METAL DOOR

Metal Vision Frame Applications

- Maximum hollow metal door size: 48" x 120" single, pairs approved
- Door and frame must be manufactured by companies that are classified by Underwriters Laboratories Inc.® for the manufacturing and labeling of hollow metal fire doors and frames. Warnock-Hersey (I.T.S.) listings are also available through participating hollow metal manufacturers
- For exterior fire rated applications, seal against moisture using standard industry methods
- Verify all applications with your door and/or frame manufacturer

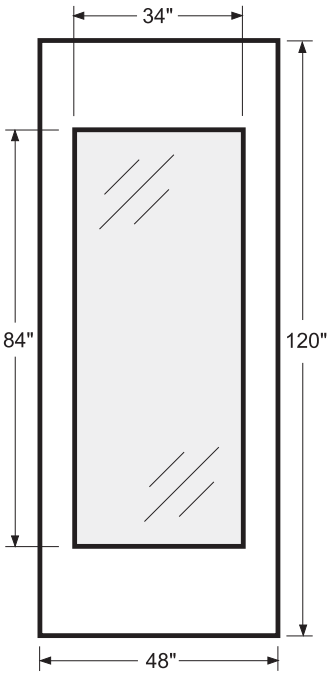

For 20 minute and 45 minute the maximum visible glass size allowed is 34" wide x 84" high or 2,856 square inches per vision lite.

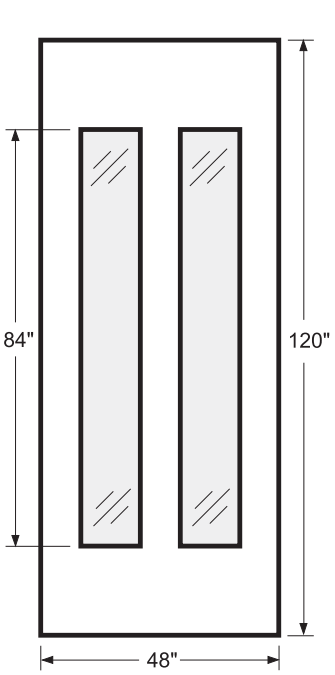

Multiple vision lites are allowed in both the 20 minute and 45 minute, but the combined total visible glass area allowed is 2,856 square inches per door.

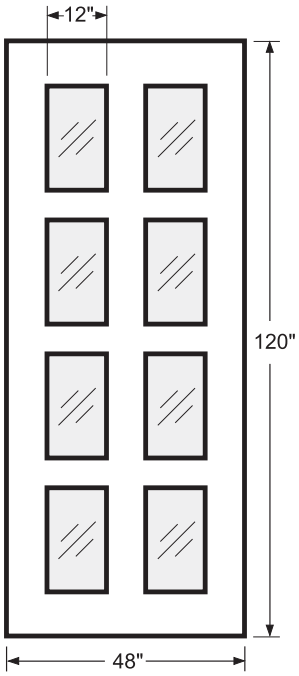

FG3000S45

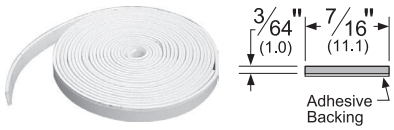

Color: White

Sectional View of Applications

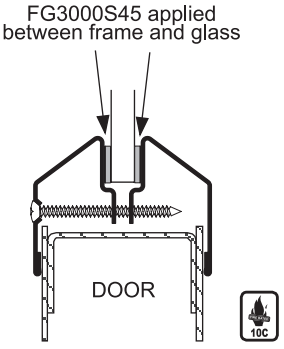

Beveled

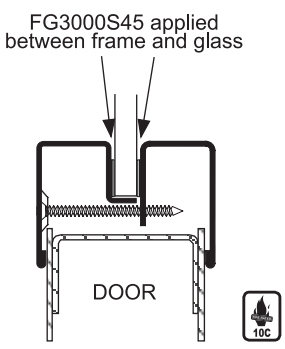

Square

PEMKO
ASSA ABLOY
Experience a safer and more open world

800-824-3018 | www.pemko.com
Check the web site for the up-to-date catalog

Copyright © 2015-2025, ASSA ABLOY Accessories and Door Controls Group, Inc., an ASSA ABLOY Group company. All rights reserved. Reproduction in whole or in part without the express written permission of ASSA ABLOY Accessories and Door Controls Group, Inc. is prohibited.

FG3000S45 FIRE GLAZING TAPE IN 20- AND 45-MINUTE WOOD DOOR

Metal Vision Frame Applications

FG3000S45



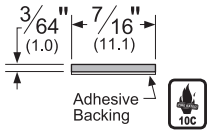

Color: White

Sectional View of Applications

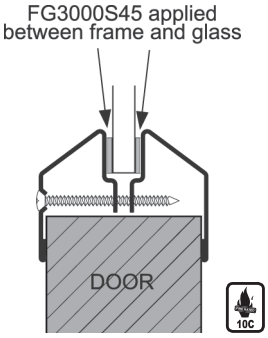

Beveled

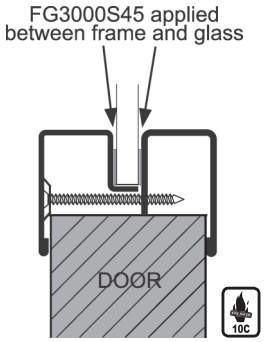

Square

Technical Data for 20- And 45-Minute Wood Doors Equipped with FG3000S45 (Metal Vision Frame, Single and Multiple Lite Applications)

Lite Configurations

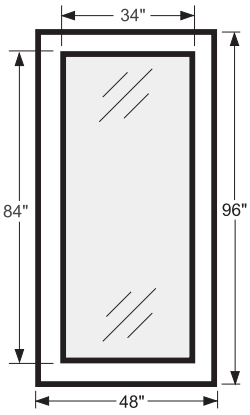

Single Vision Lite

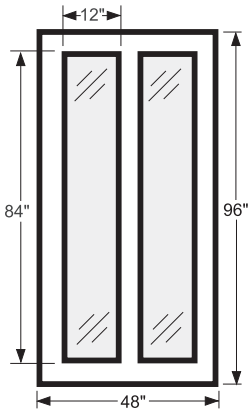

Multiple Vision Lites

The maximum visible glass area allowed for single lites is 34" wide x 84" high; for single and multiple lites, the total visible glass area allowed is 2,856 square inches per door.

Lite Specifications	Door Specification	Listing/Labeling Specifications
Maximum Dimensions (Single Lite): 34" wide x 84" high, 2,856 square inches per lite **Maximum Combined Dimensions (Multiple Lites):** Multiple vision lites are allowed in both the 20- and 45-minute doors, but the combined total visible glass area allowed is 2,856 square inches per door.	**Maximum Dimensions:** Or both 20- and 45-minute doors, the maximum wood door size is 48" x 96" single, pairs approved	• Door and frame must be manufactured by companies that are classified by Underwriters Laboratories Inc.® for the manufacturing and labeling of hollow metal fire doors. Warnock Hersey (I.T.S.) listings are also available through participating hollow metal manufacturers • Listed Glazing Products include: – **Wire Glazing:** Pilkington, Asahi and Central Glass • Individual door and frame manufacturers' modification procedures may vary slightly from the size listings shown

Copyright © 2015-2025, ASSA ABLOY Accessories and Door Controls Group, Inc., an ASSA ABLOY Group company. All rights reserved.
Reproduction in whole or in part without the express written permission of ASSA ABLOY Accessories and Door Controls Group, Inc. is prohibited.

PEMKO
ASSA ABLOY
Experience a safer and more open world

FG3000S90 FIRE GLAZING TAPE IN 90-MINUTE HOLLOW METAL DOOR METAL VISION FRAME APPLICATIONS

- Verify all applications with your door and/or frame manufacturer
- For exterior fire-rated applications, seal against moisture using industry standard methods

FG3000S90

AVAILABLE LENGTHS: **8', 16'**

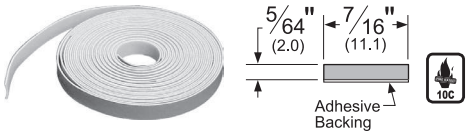

Color: White

Sectional View of Applications

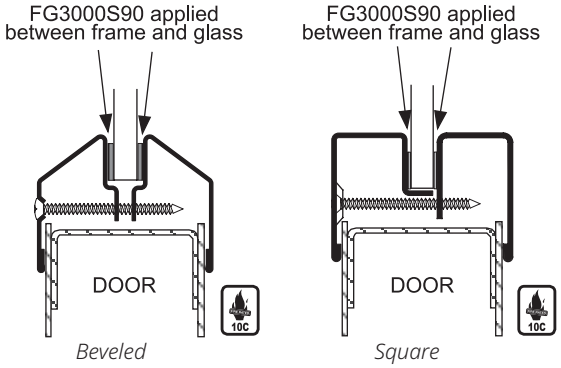

Beveled *Square*

Technical Data for 90-Minute Hollow Metal Doors Equipped with FG3000S90 (Metal Vision Frame, Single And Multiple Lite Applications)

Lite Configurations

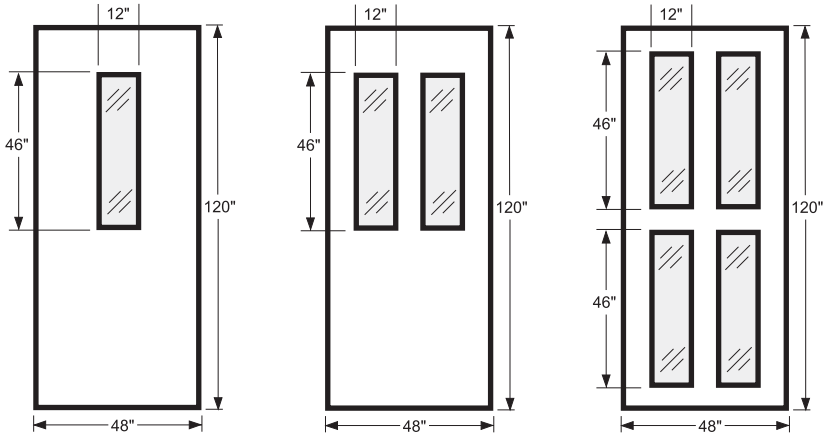

Single Vision Lite *Multiple Vision Lite* *Multiple Vision Lites*

The maximum visible glass area allowed for single lites is 12" wide x 46" high or 552 square inches per vision lite; for multiple lites, the largest approved door configuration is two (2) vision lites at 12" wide x 46" high above two (2) vision lites at 12" wide x 46" high (as shown at far right). No more than four (4) lites are allowed per door, and the combined total visible glass area allowed is 2,208 square inches per door.

Lite Specifications	Door Specification	Listing/Labeling Specifications
Maximum Dimensions (Single Lite): 12" wide x 46" high, 552 square inches per lite **Maximum Combined Dimensions (Multiple Lites):** Multiple vision lites are allowed in 90-minute doors, but the combined total visible glass area allowed is 2,208 square inches per door. No more than four (4) lites are allowed per door. The largest approved configuration is above two (2) vision lites at 12" wide x 46" high above two vision lites at 12" wide x 46" high.	**Maximum Dimensions:** For 90-minute doors, the maximum hollow metal door size is 48" x 120" single, pairs approved.	• Door and frame must be manufactured by companies that are classified by Underwriters Laboratories Inc.® for the manufacturing and labeling of hollow metal fire doors. Warnock Hersey (I.T.S.) listings are also available through participating hollow metal manufacturers • Listed Glazing Products include: – Wire Glazing: Pilkington, Asahi and Central Glass • Individual door and frame manufacturers' modification procedures may vary slightly from the size listings shown.

PEMKO
ASSA ABLOY
Experience a safer and more open world

800-824-3018 | www.pemko.com
Check the web site for the up-to-date catalog

Copyright © 2015-2025, ASSA ABLOY Accessories and Door Controls Group, Inc., an ASSA ABLOY Group company. All rights reserved. Reproduction in whole or in part without the express written permission of ASSA ABLOY Accessories and Door Controls Group, Inc. is prohibited.

FG3000S90 FIRE GLAZING TAPE IN 60- AND 90-MINUTE WOOD DOORS

Metal Vision Frame Applications

- Verify all applications with your door and/or frame manufacturer
- For exterior fire-rated applications, a clear silicone caulk is recommended for water proofing

FG3000S90

AVAILABLE LENGTHS: **8', 16'**

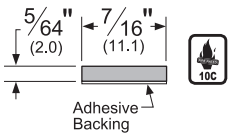

HSS2000

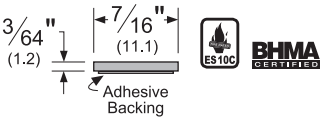

HSS2000 *is required to be installed with* FG3000S90 *for positive pressure applications only. For more information about* HSS2000*, please see the Adhesive Gasketing section.*

Sectional View of Applications

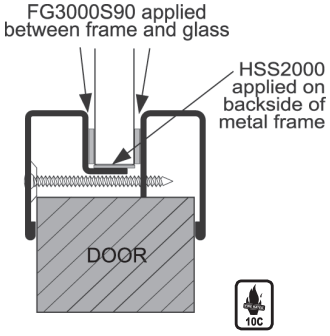

Technical Data for 60- and 90-Minute Wood Doors Equipped with FG3000S90 & HSS2000 (Metal Vision Frame, Single and Multiple Lite Applications)

Lite Configurations

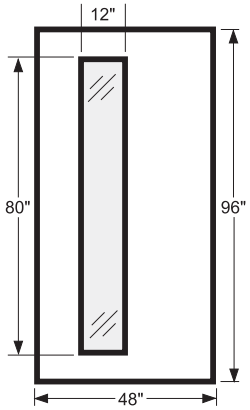

Single Vision Lite, 60-Minute Door

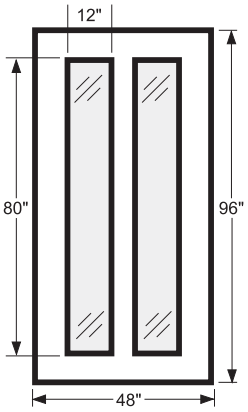

Multiple Vision Lites, 60-Minute Door

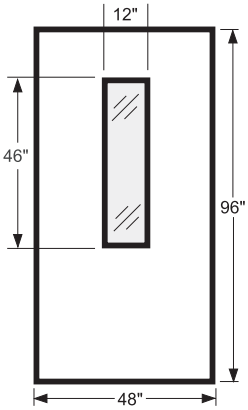

Single Vision Lite, 90-Minute Door

The maximum visible glass area allowed for 60-minute single lites is 12" wide x 80" high or 960 square inches per vision lite; 90-minute doors are allowed a maximum visible glass area of 12" wide x 46" high or 552 square inches per vision lite. Multiple lites (allowed on 60-minute doors only) have a maximum combined visible glass area of 1,920 square inches per door.

Lite Specifications	Door Specification	Listing/Labeling Specifications
Maximum Dimensions (Single Lite, 60-Minute): 12" wide x 80" high; 960 square inches per lite **Maximum Dimensions (Single Lite, 90-Minute):** 12" wide x 46" high; 552 square inches per lite **Maximum Combined Dimensions (Multiple Lites, 60-Minute):** Multiple vision lites are allowed in 60-minute doors only; the combined total visible glass area allowed is 1,920 square inches per door	**Maximum Dimensions:** For both 60- and 90-minute doors, the maximum wood door size is 48" x 96" single, pairs approved	• Door must be manufactured by companies that are classified by Underwriters Laboratories Inc.® for the manufacturing and labeling of hollow metal fire doors. Warnock Hersey (I.T.S.) listings are also available through participating hollow metal manufacturers. • Listed Glazing Products include: – Wire Glazing: Pilkington, Asahi and Central Glass • Individual door and frame manufacturers' modification procedures may vary slightly from the size listings shown • HSS2000 is required on Positive Pressure applications only

Copyright © 2015-2025, ASSA ABLOY Accessories and Door Controls Group, Inc., an ASSA ABLOY Group company. All rights reserved.
Reproduction in whole or in part without the express written permission of ASSA ABLOY Accessories and Door Controls Group, Inc. is prohibited.

PEMKO
ASSA ABLOY
Experience a safer and more open world

FG3000S45 FIRE GLAZING TAPE IN 20- AND 45-MINUTE WOOD DOORS AND FRAMES

FG3000S45

AVAILABLE LENGTHS:
7', 8', 14', 16'

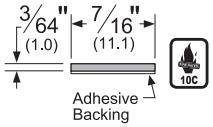

- Verify all applications with your door and/or frame manufacturer
- For exterior fire-rated applications, seal against moisture using standard industry methods
- Wood vision frames rated 20-minute and 45-minute
- Wood sidelite frames rated 20-minute and 45-minute
- Wood borrowed lite frames rated 20-minute and 45-minute

Technical Data for 20-Minute Wood Sidelite Frame/Wood Lite Bead/Clear Tempered Glass

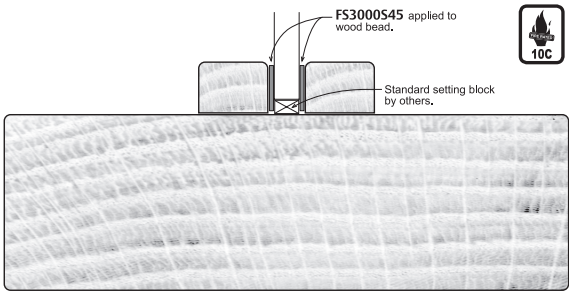

Maximum Visible Glazing Dimensions (Sidelite):
32 7/8" x 87 13/16"
Glazing Materials (Sidelite):
- PyroEdge 20™ by Interedge Technologies
- Fireglass 20™ by Technical Glass Products

Listing/Labeling Specifications:
- Positive Pressure Tested and Listed
- Verify availability with door and frame manufacturer

Technical Data For 20-Minute Full Lite Wood Door/Wood Lite Frame/Clear Tempered Glass

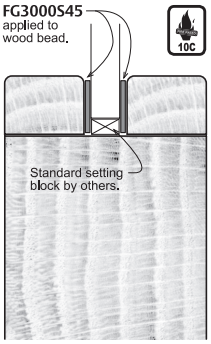

Maximum Visible Glazing Dimensions (Lite):
- (4'0" x 8'0" Door): 32 7/8"x 75 13/16"
- (4'0" x 8'0" Door): 32 7/8" x 75 13/16"

Glazing Materials (Sidelite):
- PyroEdge 20™ by Interedge Technologies
- Fireglass 20™ by Technical Glass Products

Listing/Labeling Specifications:
- Positive Pressure Tested and Listed
- Verify availability with door and frame manufacturer

Technical Data for: 20- and 45-Minute Full Lite Wood Door/Wood Lite Frame With Wire Glass or FireLite™, 20- and 45-Minute Wood Sidelite Frame/Borrowed Lite Frame/Transom Lite Frame with Wire Glass or FireLite™

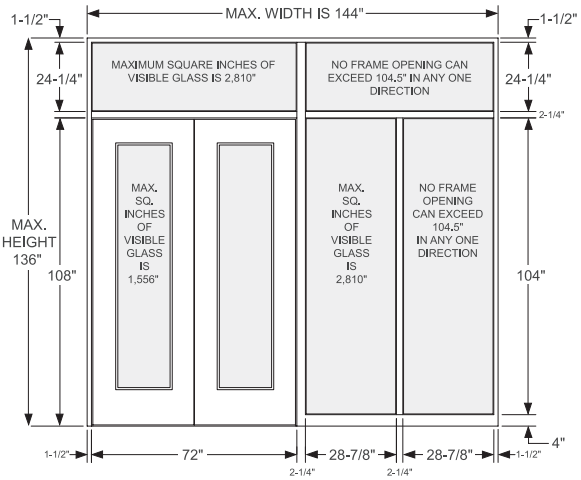

Lite Specifications (see diagram at left):
- Positive Pressure Tested and Listed
- Large visible glazing areas
- Wire Glass and FireLite™
- Verify availability with door and frame manufacturer.

Contact These Manufacturers:

Navy Island, Inc.
275 Marie Ave East, West St. Paul, MN 55118
Phone: 651.451.4454, Fax: 651.451.4484

Eggers Industries - Frame Plant
1819 East River Street, Two Rivers, WI 54241
Phone: 920.793.1351, Fax: 920.793.2958

PEMKO
ASSA ABLOY
Experience a safer and more open world

800-824-3018 | www.pemko.com
Check the web site for the up-to-date catalog

Copyright © 2015-2025, ASSA ABLOY Accessories and Door Controls Group, Inc., an ASSA ABLOY Group company. All rights reserved. Reproduction in whole or in part without the express written permission of ASSA ABLOY Accessories and Door Controls Group, Inc. is prohibited.

PEMKO DOOR & FRAME ACCESSORIES



CONTENTS:

Glazing Bead/Spreader Bar 290
Reinforcements - Fillers 290
Reinforcements - Misc 291

INDEX:

PRODUCT	PAGE
CB1-50PK	290
CR2-5PK	291
GS2-20PK	290
GS3-20PK	290
GS4-20PK	290
HF3-25PK	290

800-824-3018 | www.pemko.com

Check the web site for the up-to-date catalog

Copyright © 2015-2025, ASSA ABLOY Accessories and Door Controls Group, Inc., an ASSA ABLOY Group company. All rights reserved.
Reproduction in whole or in part without the express written permission of ASSA ABLOY Accessories and Door Controls Group, Inc. is prohibited.

PEMKO
ASSA ABLOY

Experience a safer and more open world

GLAZING BEAD/SPREADER BAR

Glazing Bead

- Sold in 20 packs only
- No fasteners supplied

GS2-20PK
- 5/8" H x 3/4" W x 10'0" L (Outer Dimension)
- Punched and countersunk for #8 screw
- Hole spacings are 6" from ends and 12" on center
- .049 18 gauge A40 galvannealed steel

GS3-20PK
- 5/8" H x 3/4" W x 10'0" L (Outer Dimension)
- Blank (no holes)
- .049 18 gauge A40 galvannealed steel

GS4-20PK
- 5/8" H x 3/4" W x 3'0" L (Outer Dimension)
- Blank (no holes)
- .049 18 gauge A40 galvannealed steel

GS2

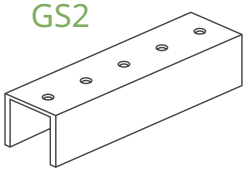

GS3

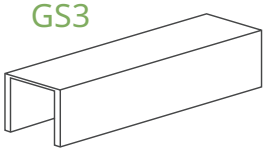

GS4

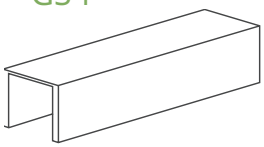

REINFORCEMENTS - FILLERS

Corner Fillers

- Holes in one side for anchoring 1 5/8" x 1 5/8"
- .065 - 16 gauge galvannealed steel
- Sold in 50 packs only

CB1-50PK
- 2" face frame corner filler.
- 5/8"x 7/16" lip x 1 13/16" wide

CB1

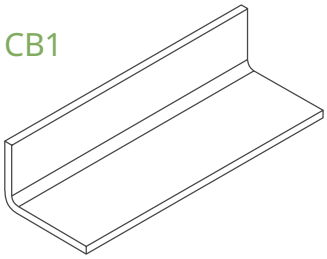

Frame Hinge Filler Plate

- For 1 3/4" rabbeted frames
- Two (2) #12-24 x 1/2" F.H.M.S.
- Sold in 25 packs only

HF3-25PK
- 4 1/2" hinge filler for frames.
- 1 5/8" x 4 1/2" x .134 HRPO

HF3

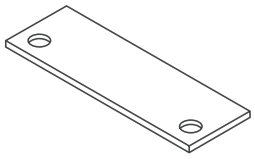

Copyright © 2015-2025, ASSA ABLOY Accessories and Door Controls Group, Inc., an ASSA ABLOY Group company. All rights reserved. Reproduction in whole or in part without the express written permission of ASSA ABLOY Accessories and Door Controls Group, Inc. is prohibited.

REINFORCEMENTS - MISC.

Weld-In Reinforcements

- Weld-in closer reinforcement
- CR2 sold in 5 packs only
- CR3 sold in 20 packs only

CR2-5PK

- 12" flat closer reinforcement for standard and PA mount closers
- 1¾" x 12" x .134 - 10 gauge HRPO

CR2

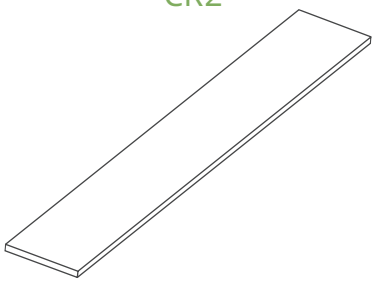

Copyright © 2015-2025, ASSA ABLOY Accessories and Door Controls Group, Inc., an ASSA ABLOY Group company. All rights reserved.
Reproduction in whole or in part without the express written permission of ASSA ABLOY Accessories and Door Controls Group, Inc. is prohibited.

PEMKO
ASSA ABLOY
Experience a safer and more open world

The ASSA ABLOY Group is the global leader in access solutions. Every day, we help billions of people experience a more open world.

ASSA ABLOY Opening Solutions leads the development within door openings and products for access solutions in homes, businesses and institutions. Our offering includes doors, frames, door and window hardware, mechanical and smart locks, access control and service.

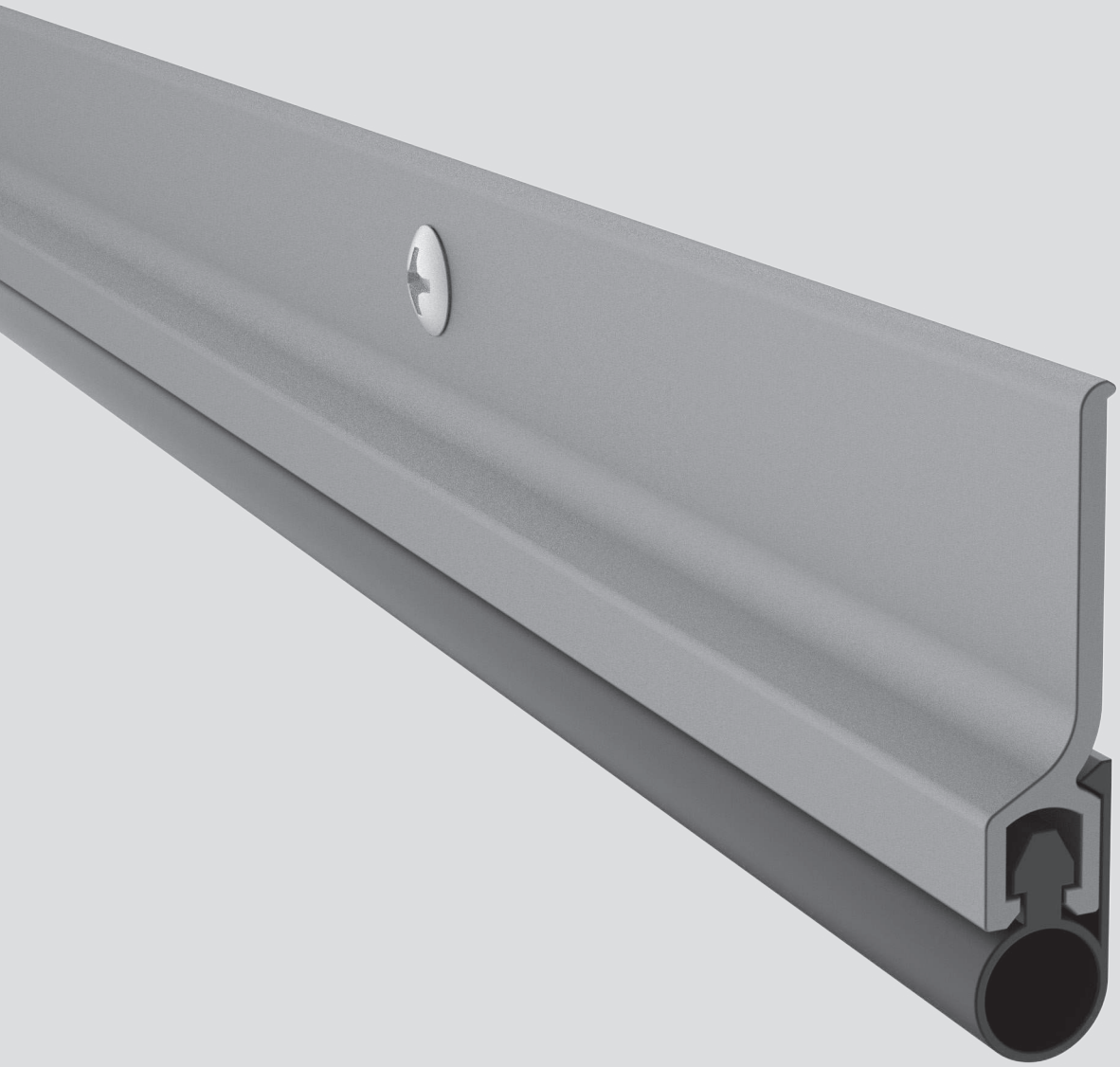

Pemko
5535 Distribution Dr.
Memphis, TN 38141
www.pemko.com
orders.pemko@assaabloy.com

Memphis, TN USA
P: 800 824 3018
F: 800 243 3656

Ventura, CA USA
P: 800 283 9988
F: 800 283 4050

Vaughan, ON CA
P: 800 461 3007
F: 800 461 8989

Copyright © 2015-2026, ASSA ABLOY Accessories and Door Controls Group, Inc. All rights reserved. Reproduction in whole or in part without the express written permission of ASSA ABLOY Accessories and Door Controls Group, Inc. is prohibited. Printed in the U.S.A.

80071 4861 09/26