8000 Series Door Closer

Regular, Top Jamb, or Parallel Arms
Non-Hold Open
Installation Instructions

NORTON RIXSON

ASSA ABLOY

WARNING

This product can expose you to lead which is known to the state of California to cause cancer and birth defects or other reproductive harm.
For more information go to: www.P65warnings.ca.gov.

Non-Hold Open Arm Models
8101, 8301, 8501

READ AND FOLLOW ALL INSTRUCTIONS.
SAVE THESE INSTRUCTIONS.

CAUTION An incorrectly installed or improperly adjusted door closer can cause property damage or personal injury. These instructions should be followed to avoid the possibility of misapplication or misadjustment. **CAUTION**

Regular Arm

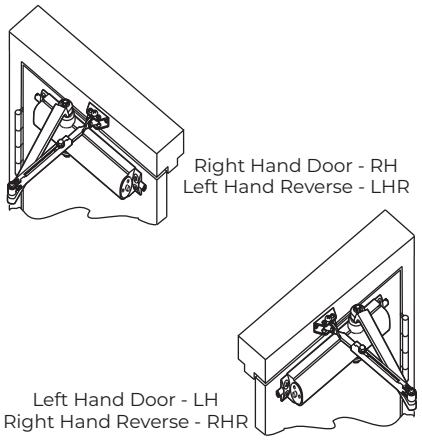

Top Jamb Mount

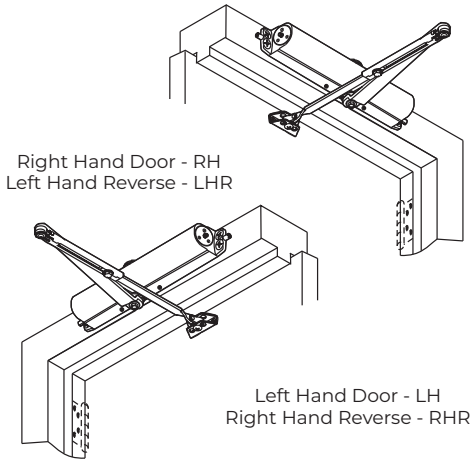

Parallel Arm

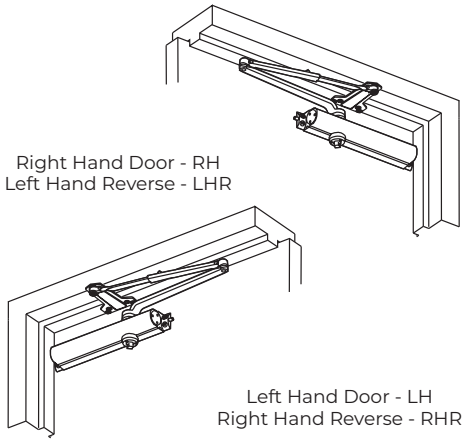

NOTE: "DA" sufflix (Delayed Action) is an optional feature.

To Determine Date Code:

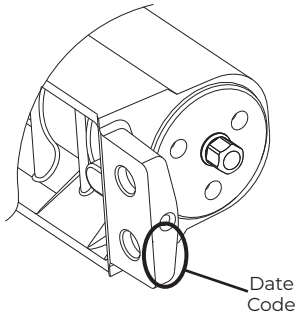

To Determine Hand of Door:

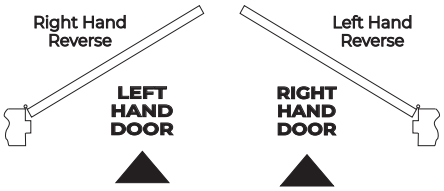

Tools Needed:

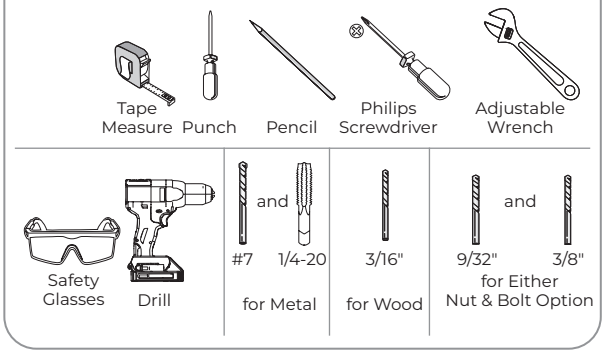

Included Components

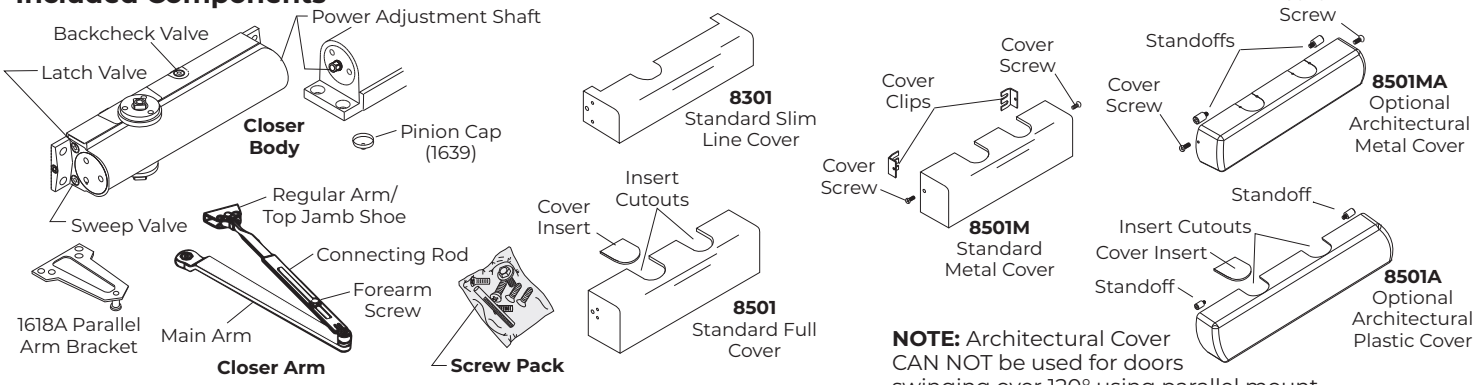

NOTE: Architectural Cover CAN NOT be used for doors swinging over 120° using parallel mount.

Copyright © 2004, 2017, 2023, 2025, 2026, ASSA ABLOY Accessories and Door Controls Group, Inc. All rights reserved. Reproduction in whole or in part without the express written permission of ASSA ABLOY Accessories and Door Controls Group, Inc. is prohibited.

80-9380-2206-020 Rev 5 07/26

Approved 2026-07-08

Experience a safer and more open world

8000 Series Non-Hold Open Closer

NOTES: For special applications a separate door and frame preparation template is packed with these instructions. Use this instruction sheet for installation sequence and closer adjustments only.

- Doors should be hung on ball bearing or anti-friction hinges.
- A separate door stop is recommended.
- Door and frame must be properly reinforced.
- Always adjust spring power before adjusting control.
- Adjust closing time speed between 3 and 7 seconds from 90° to 0°. Greater closing times may be required for elderly or handicapped.
- These door closers should NOT be installed on the exposed side (weather side) of exterior doors.

Supplied Hardware

Mounting Hardware		Door or Frame	Drill
	Closer, PA Bracket: 1/4-14 x 1-1/2 Oval Flat Head Self Drilling Screw	Wood/Metal	3/16" (4.8mm) for wood
	Closer, PA Bracket: 1/4-20 x 3/4 Oval Flat Head Mach. Screw	Metal	Drill #7 (.201 dia. or 5.1mm) Tap 1/4-20
	Arm Shoe to Jamb or Door: 1/4-20 x 5/8 Round Head Mach. Screw		
	Arm Shoe to Jamb or Door: 1/4-14 x 1-1/2 Round Head Self Drilling Screw	Wood/Metal	3/16" (4.8mm) for wood
	Closer: Sleeve Nut and Bolt (SNB) with 1/4-20 x 3/4 Oval Flat Head Mach. Screw (standard with tri-pack closers)	Hollow Metal	9/32" (7.0mm) thru 3/8" (9.5mm) door face opposite to closer
		Aluminum or Wood	3/8" (9.5mm) thru
	Closer: Thru Bolt and Grommet Nut (TBGN) (optional)	All	9/32" (7.0mm) thru 3/8" (9.5mm) dia. x 3/8" (9.5mm) deep, door face opposite to closer

Closer Adjustments

By law the Americans with Disabilities Act (ADA) may require that door closer installation comply with accessibility guidelines.

The closing force for series 8301 & 8501 door closers is adjustable from a size 1 to a size 6, as outlined in ANSI Standard A156.4. When these series of door closers are installed and adjusted to conform to ADA reduced opening force requirements (5 lbs max.) for interior doors, they may not have adequate closing force to reliably close and latch the door. Power adjustments charted on this page are recommended where possible, to ensure proper door control.

Spring Closing Power				Number of Turns Required			
	Door	Type of Installation	*	Maximum Door Size			
				34" (86cm)	36" (91cm)	40" (102cm)	48" (122cm)
8101/8301/8501	Interior	Regular Arm Top Jamb	Full 360° Turns	5	8	11	13
		Parallel Arm		7	10	13	16
	Exterior	Regular Arm Top Jamb		7	10	13	16
		Parallel Arm		9	12	15	18

*20 Full (360°) turns maximum available.
Closer is shipped set at mid range setting = 10 turns

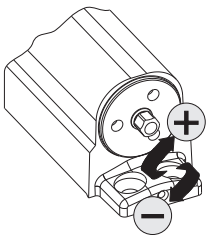

Spring Power Adjustment
(Use 5/16" socket or adjustable wrench for this adjustment)

Adjust Closing Speed Time to between 3 to 7 seconds from 90°. Use of the door by handicapped, elderly or small children may require greater closing time.

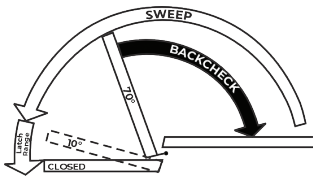

Delayed Action (Optional)

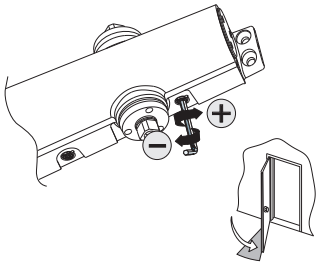

Sweep

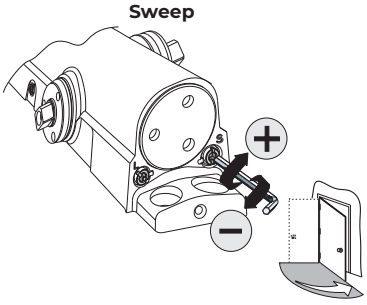

Latch

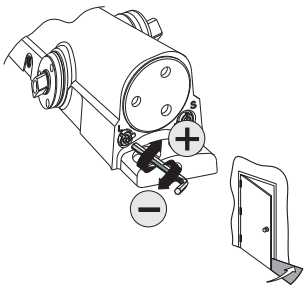

Backcheck

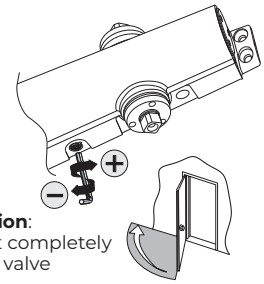

Caution: Don't completely close valve

Copyright © 2004, 2017, 2023, 2025, 2026, ASSA ABLOY Accessories and Door Controls Group, Inc. All rights reserved. Reproduction in whole or in part without the express written permission of ASSA ABLOY Accessories and Door Controls Group, Inc. is prohibited.

80-9380-2206-020 Rev 5 07/26

Approved 2026-07-08

8000 Regular Arm Installation (Right Hand Shown)

A. Prepare door and frame.

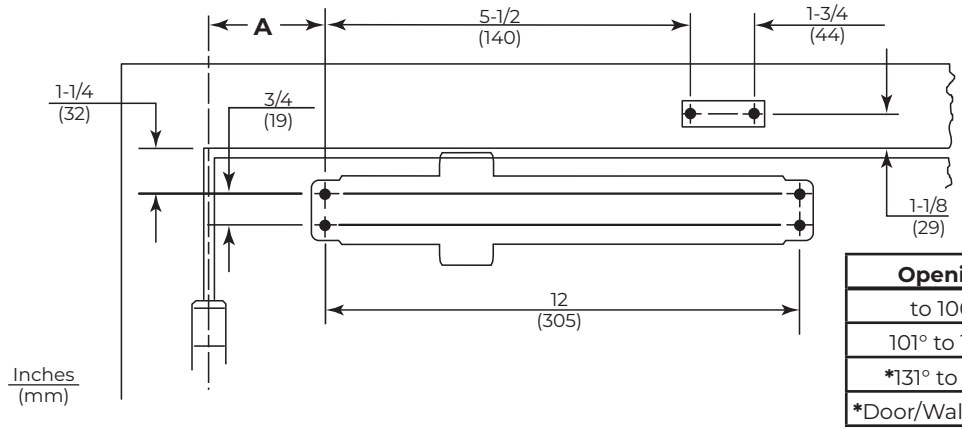

Opening	Dimension "A"
to 100°	7-1/2 (191)
101° to 130°	6 (152)
*131° to 180°	4-1/2 (114)
*Door/Wall/Hardware/Jamb conditions permitting	

B. Install Closer to Door, Choose arm placement in shoe, and install arms.

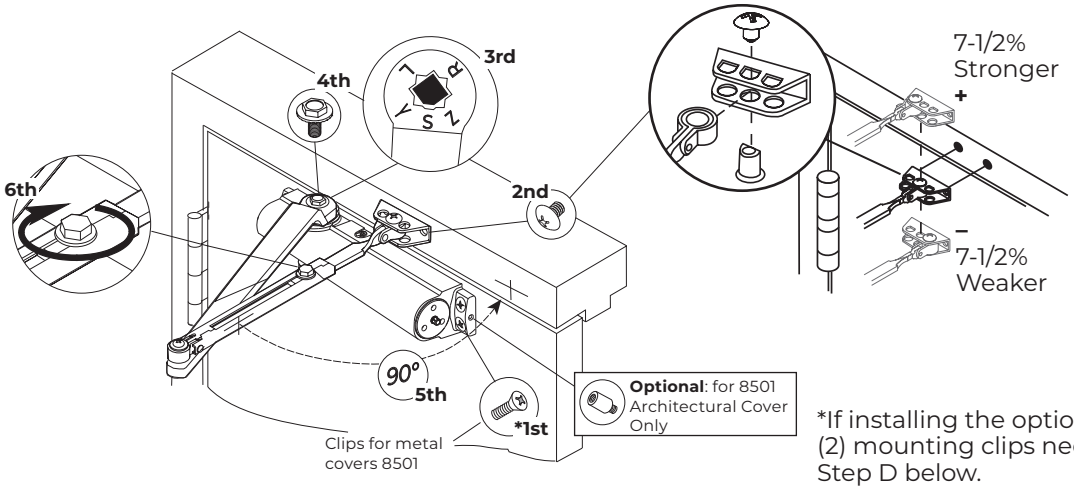

*If installing the optional 8501 metal cover, two (2) mounting clips need to be installed. Refer to Step D below.

C. Adjust closer.

Refer to page 2 for Delayed Action, Sweep, Latch, and Backcheck closer adjustments.

D. Install Pinion Cap or Optional Cover

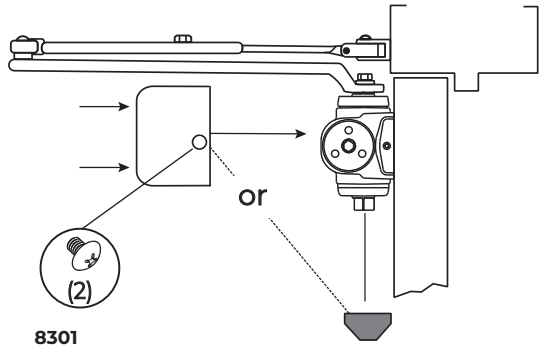

8301
Screw pinion cap onto pinion shaft by hand or with a Phillips screw driver - DO NOT OVER TIGHTEN.

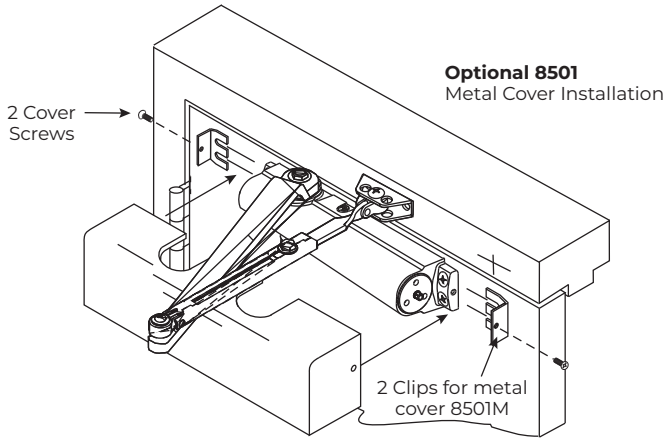

The **8000 Non-Hold Open Closer - Regular Arm** has now been installed.

Copyright © 2004, 2017, 2023, 2025, 2026, ASSA ABLOY Accessories and Door Controls Group, Inc. All rights reserved. Reproduction in whole or in part without the express written permission of ASSA ABLOY Accessories and Door Controls Group, Inc. is prohibited.

8000 Top Jamb Installation (Right Hand Shown)

A. Prepare door and frame.

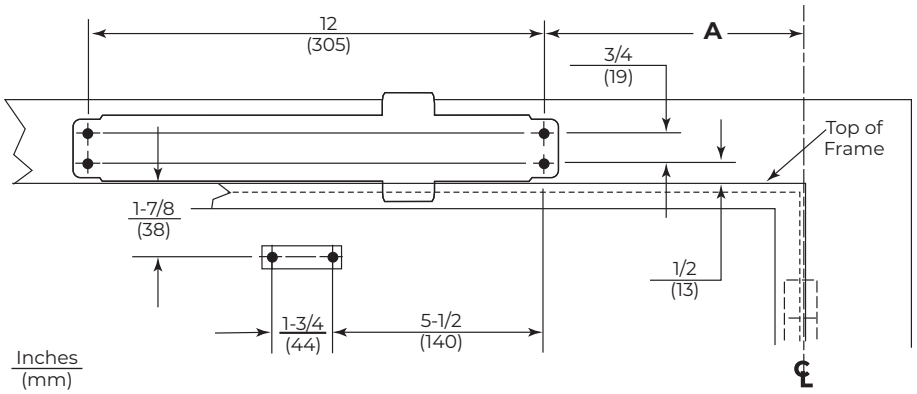

Opening	Dimension "A"
to 100°	7-1/2 (191)
101° to 130°	6 (152)
*131° to 180°	4-1/2 (114)
*Door/Wall/Hardware/Jamb conditions permitting	

A longer connecting rod, 7701-1A, is required for reveals greater than 3" (76)

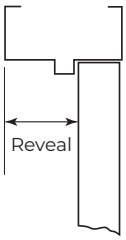

B. Install Closer to Door, Choose arm placement in shoe, and install arms.

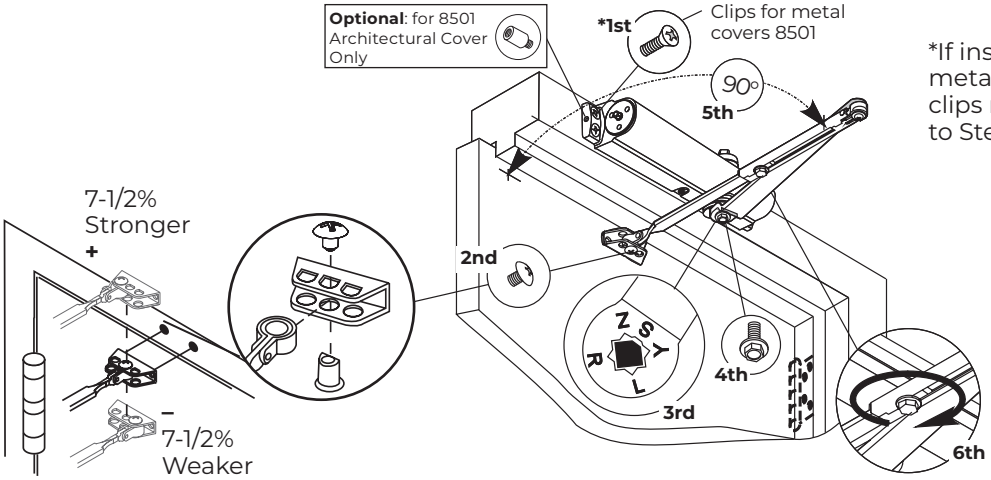

*If installing the optional 8501 metal cover, two (2) mounting clips need to be installed. Refer to Step D below.

C. Adjust closer.

Refer to page 2 for Delayed Action, Sweep, Latch, and Backcheck closer adjustments.

D. Install Pinion Cap or Optional Cover

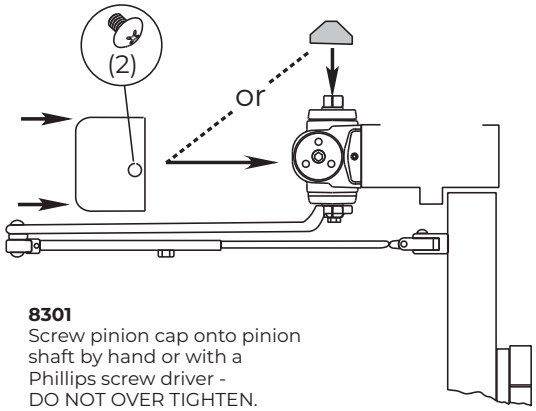

8301
Screw pinion cap onto pinion shaft by hand or with a Phillips screw driver - DO NOT OVER TIGHTEN.

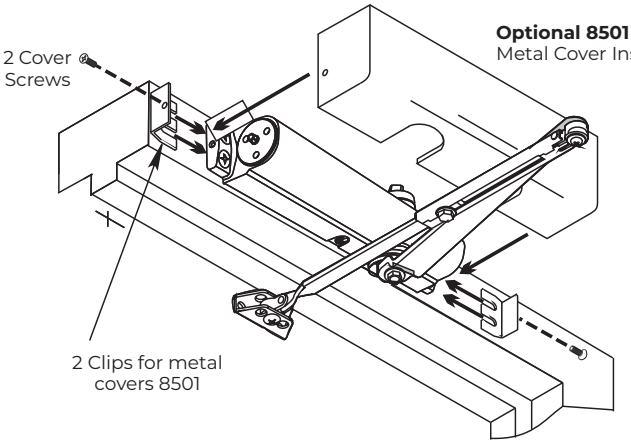

The **8000 Non-Hold Open Closer - Top Jamb** has now been installed.

Copyright © 2004, 2017, 2023, 2025, 2026, ASSA ABLOY Accessories and Door Controls Group, Inc. All rights reserved. Reproduction in whole or in part without the express written permission of ASSA ABLOY Accessories and Door Controls Group, Inc. is prohibited.

80-9380-2206-020 Rev 5 07/26

Approved 2026-07-08

8000 Parallel Arm Installation (Right Hand Shown)

A. Prepare door and frame.

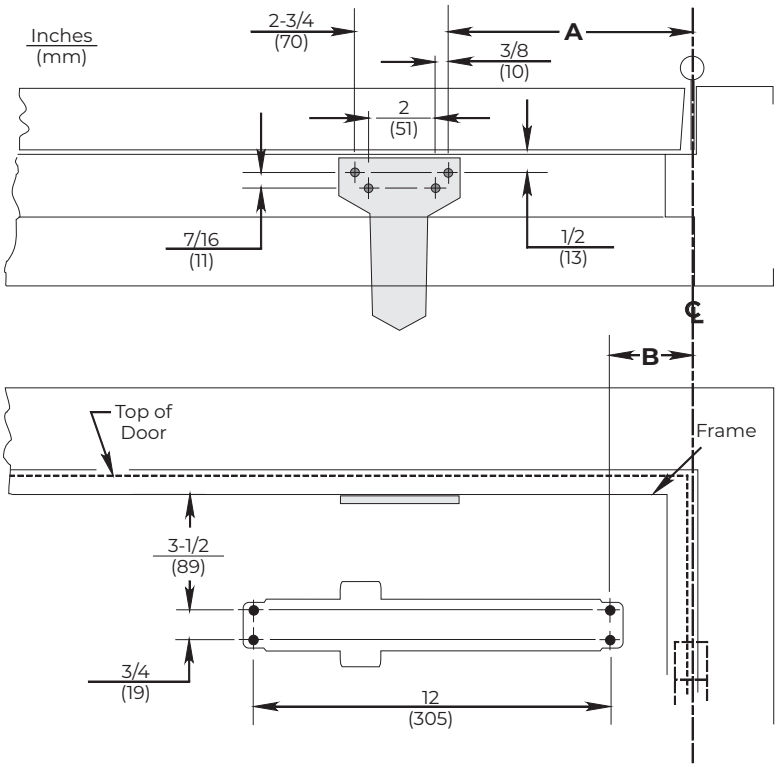

Opening	A	B
to 120°	9-1/2 (241)	3-3/4 (95)
*121° to 180°	7 (178)	1-1/4 (32)

*Door/Wall/Hardware/Jamb conditions permitting. 8501A and 8501MA Series cannot be installed for this door opening range.

B. Install Closer to Door, Choose arm placement in shoe, and install arms.

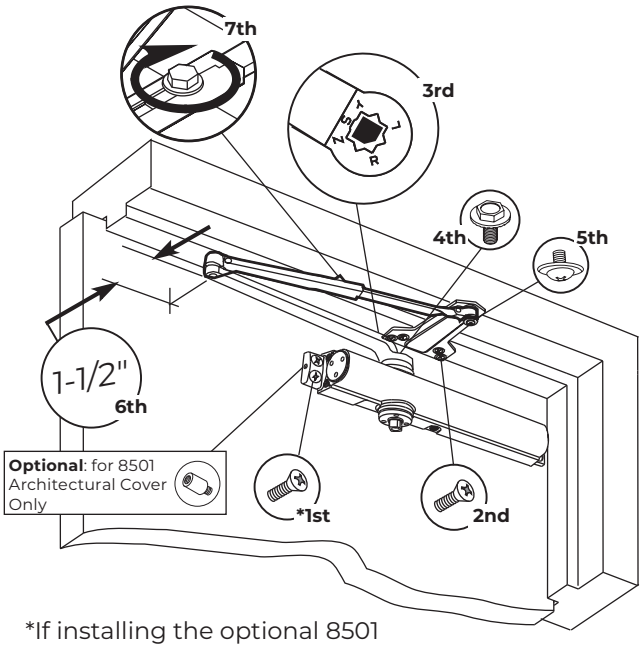

*If installing the optional 8501 metal cover, two (2) mounting clips need to be installed. Refer to Step K on page 6.

C. Close Valves.

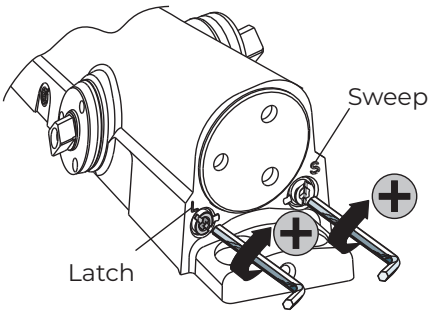

D. Install Closer and Bracket.

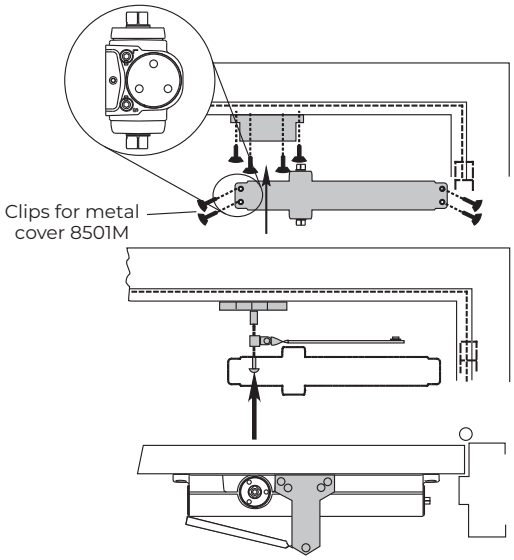

E. Preload Closer.

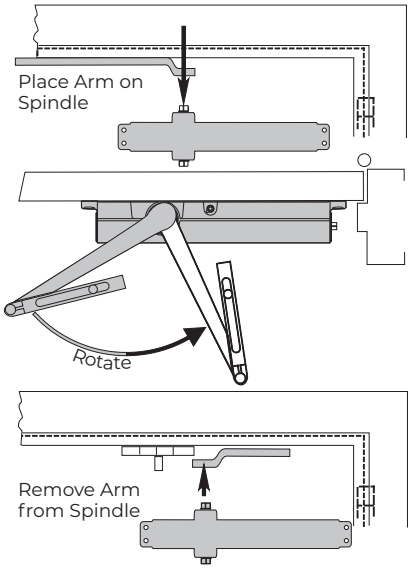

Continued on next page...

Copyright © 2004, 2017, 2023, 2025, 2026, ASSA ABLOY Accessories and Door Controls Group, Inc. All rights reserved. Reproduction in whole or in part without the express written permission of ASSA ABLOY Accessories and Door Controls Group, Inc. is prohibited.

The ASSA ABLOY Group is the global leader in access solutions. Every day we help people feel safe, secure and experience a more open world.

NORTON RIXSON

ASSA ABLOY

8000 Parallel Arm Installation (Right Hand Shown)-cont.

F. Install arms on Pinion Square.

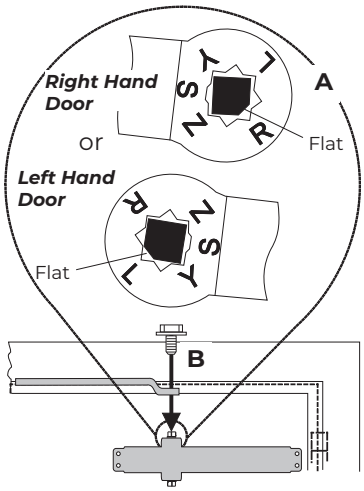

G. Open Valves.

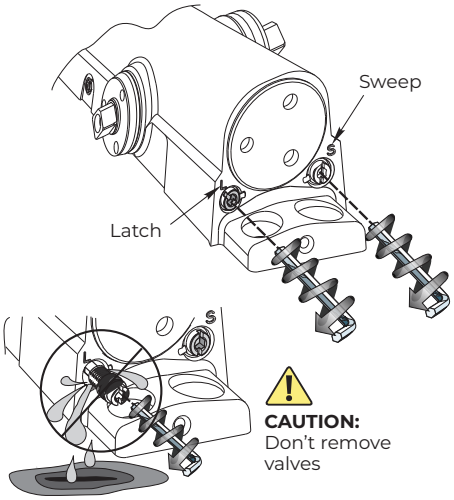

H. Assemble Arm.

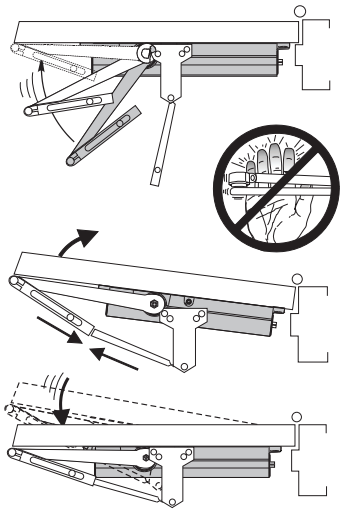

I. Install Arm Screw.

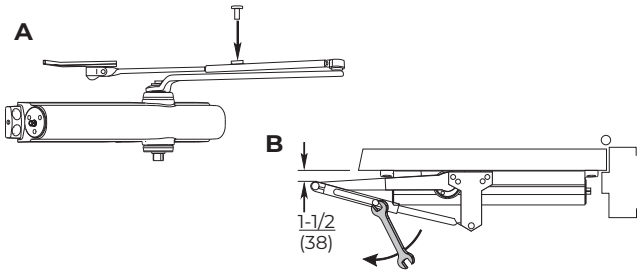

J. Adjust closer.

Refer to page 2 for Delayed Action, Sweep, Latch, and Backcheck closer adjustments.

K. Install Pinion Cap or Optional Cover

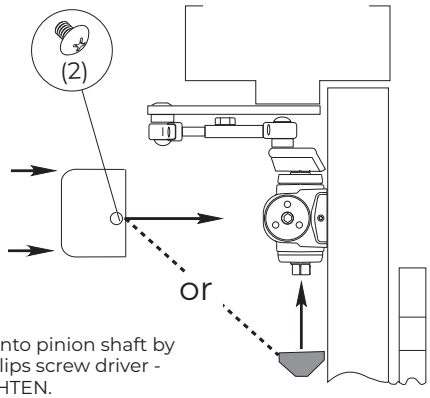

8301
Screw pinion cap onto pinion shaft by hand or with a Phillips screw driver - DO NOT OVER TIGHTEN.

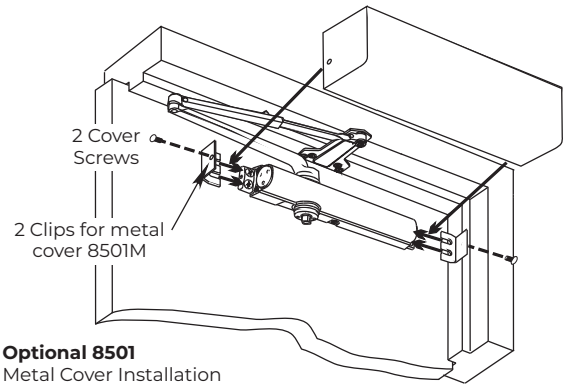

Optional 8501
Metal Cover Installation

The **8000 Non-Hold Open Closer - Parallel Arm** has now been installed.

Technical Product Support:
Monroe, NC 28112 USA
Phone: 877.974.2255 ext: 2
Techsupport.NortonRixson@assaabloy.com
NortonRixson.com

Norton Rixson is a brand associated with ASSA ABLOY Accessories and Door Controls Group, Inc., an ASSA ABLOY Group company. Copyright © 2004, 2017, 2023, 2025, 2026, ASSA ABLOY Accessories and Door Controls Group, Inc. All rights reserved. Reproduction in whole or in part without the express written permission of ASSA ABLOY Accessories and Door Controls Group, Inc. is prohibited.

80-9380-2206-020 Rev 5 07/26

Approved 2026-07-08