TEMPLATE **T-441**

Effective date: May 15, 2026
Supercedes: All Previous

NOT TO SCALE

ROCKWOOD
ASSA ABLOY

Experience a safer
and more open world

ROCKWOOD 441 DOME STOP

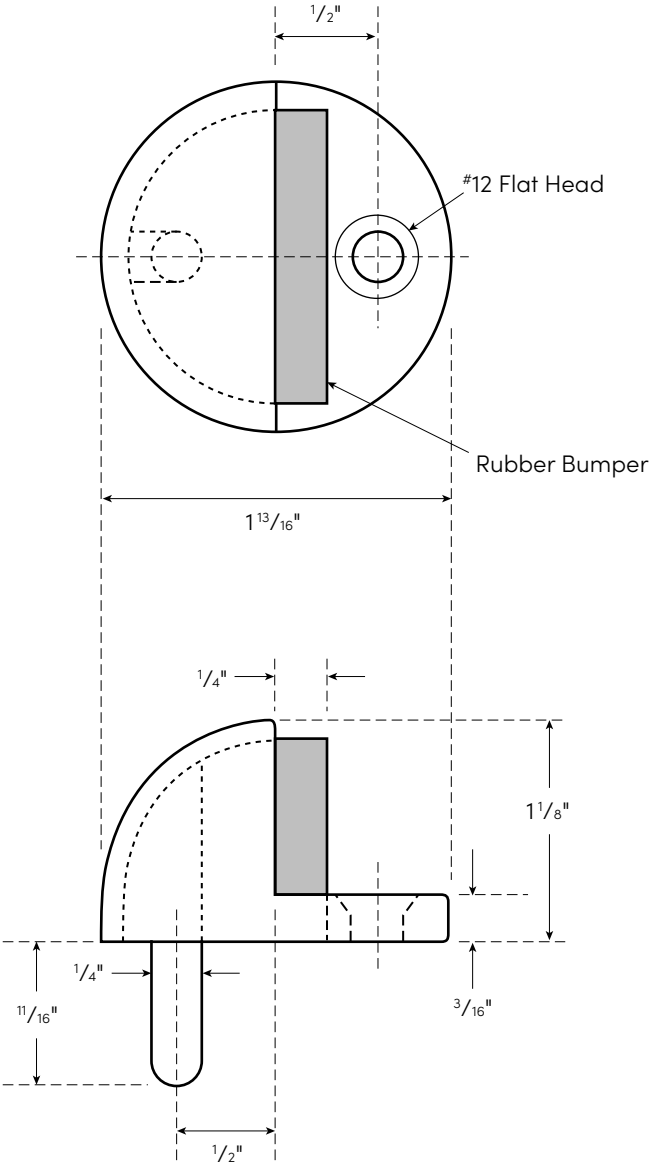

Rockwood Manufacturing Company
300 Main St.
Rockwood, PA 15557
www.rockwoodmfg.com
1 800 458 2424

NOTE: Rockwood reserves the right to make product changes and is not responsible for obsolete template errors.
To ensure your template is current please visit our website at www.rockwoodmfg.com or call us at 800 458 2424.

Rockwood is a brand associated with ASSA ABLOY Accessories and Door Controls Group, Inc.
Copyright © 2017-2026, ASSA ABLOY Accessories and Door Controls Group, Inc. All rights reserved. Reproduction in whole or in part without the express written permission of ASSA ABLOY Accessories and Door Controls Group, Inc. is prohibited. Printed in the U.S.A 31314 5/26