SARGENT

ASSA ABLOY

281, 351 and 1431 Series Parts Manual

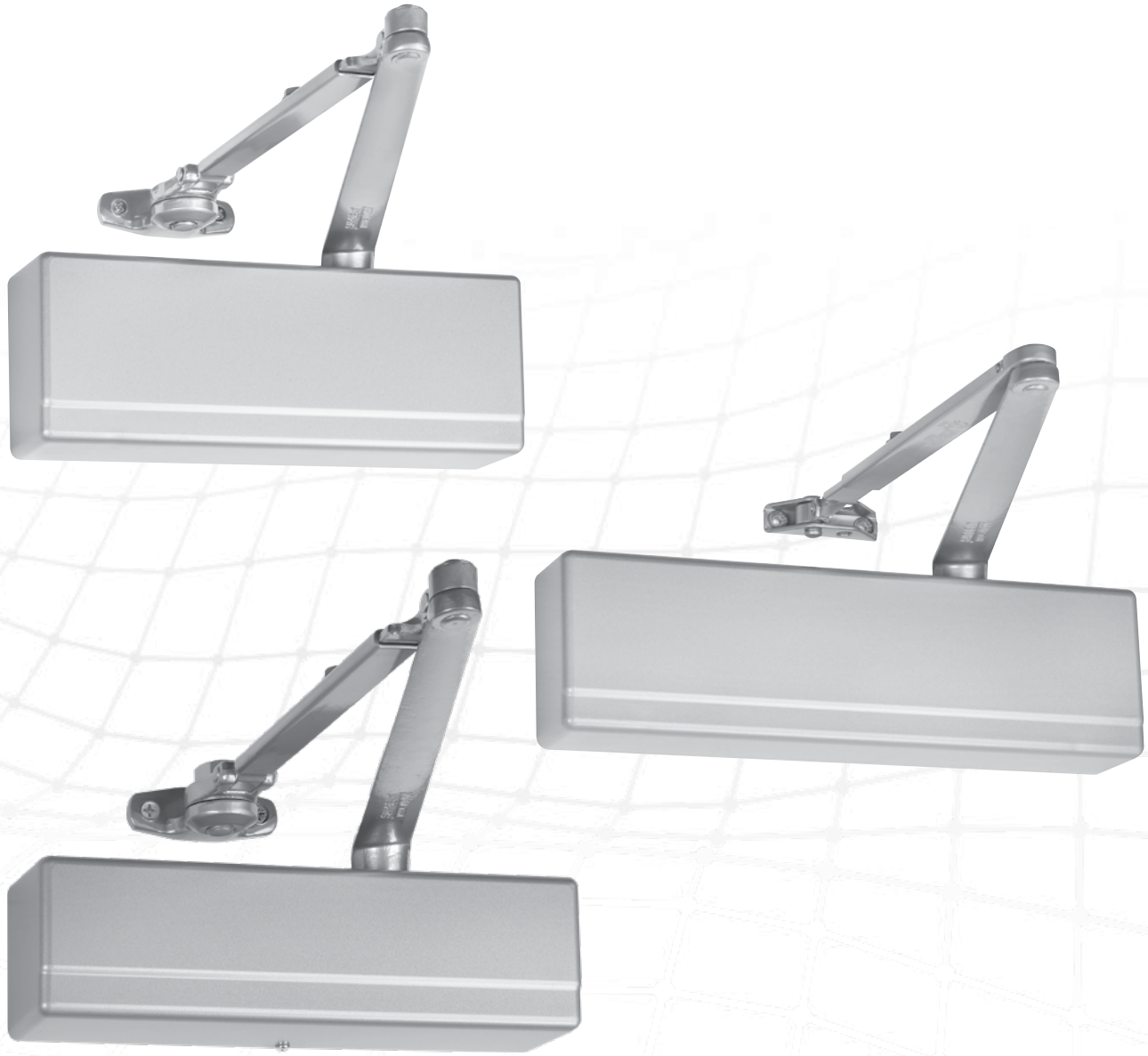

WARNING

This product can expose you to lead which is known to the state of California to cause cancer and birth defects or other reproductive harm. For more information go to www.P65warnings.ca.gov.

90902 10/25

For assistance, contact SARGENT at 800-727-5477 or www.sargentlock.com

Experience a safer and more open world

Copyright © 2019, 2025, SARGENT Manufacturing Company. All rights reserved. Reproduction in whole or in part without the express written permission of SARGENT Manufacturing Company is prohibited.

TABLE OF CONTENTS

SARGENT
ASSA ABLOY

281 Series Door Closer Body Assembly & Cover 3
351 Series Door Closer Body Assembly & Cover 4
1431 Series Door Closer Body Assembly & Cover 5
25-O/OZ/OZA Regular Arm....6
25-H / PH9 "UH" Holder Arm....7
25-P9 Parallel Arm 8
25-P10 Heavy Duty Parallel Arm....9
25-CPS Heavy Duty Parallel Arm with Compression Stop 10
25-CPSH Heavy Duty Parallel Arm with Hold Open and Compression Stop 11
25-PS Heavy Duty Parallel Arm with Stop....12
25-PSH Heavy Duty Parallel Arm with Hold Open and Stop 13
25-OT Track Type Arm, Pull Side 14
25-OTB Track Type Arm With Bumper, Pull Side 15
25-HT Track Type Arm With Hold Open, Pull Side 16
25-HTB Track Type, Hold Open With Bumper, Pull Side....17
25-POT Track Type Arm, Push Side....18
25-POTB Track Type Arm With Bumper, Push Side 19
25-PHT Track Type Arm With Hold Open, Push Side 20
25-PHTB Track Type Arm, Hold Open With Bumper, Push Side 21
25-OD Track Type Arm, Double Egress 22
25-ODB Track Type Arm with Bumper, Double Egress 23
25-HD Track Type Arm With Hold Open, Double Egress 24
25-HDB Arm And Track Assembly....25
25-ODS Arm And Track Assembly....26
25-ODSB Arm And Track Assembly 27
25- HDS Arm And Track Assembly....28
25- HDSB Arm And Track Assembly....29
25-OTP Pocket Application Arm & Track Assembly 30
25-OP Pocket Arm Assembly....31

90902 10/25

The warranty on SARGENT® products becomes void if the product is modified in any way, regardless of whether the modification causes or contributes to any alleged defect. If a SARGENT product is modified it may no longer meet industry certification and quality control standards applicable to the original product and is no longer a genuine SARGENT product.

Copyright © 2019, 2025 Sargent Manufacturing Company, an ASSA ABLOY Group company. All rights reserved. Reproduction in whole or in part without the express written permission of Sargent Manufacturing Company is prohibited.

Experience a safer
and more open world

281 SERIES DOOR CLOSER
BODY ASSEMBLY & COVER

SARGENT
ASSA ABLOY

Item	Part No.	Description
1	281-CB*	Closer body
	281DA-CB*	Delayed action closer body
	281-ABC-CB*	Advanced backcheck closer body
2	63-0555	Mounting bracket pk
3	281-C**	Plastic cover (non-handed)
4	281-CMC*	Metal cover - specify LH or RH when ordering (see note)
	63-3481*	Screw pack

*Finish required
**Powder coat finishes only
Note: specify arm being used

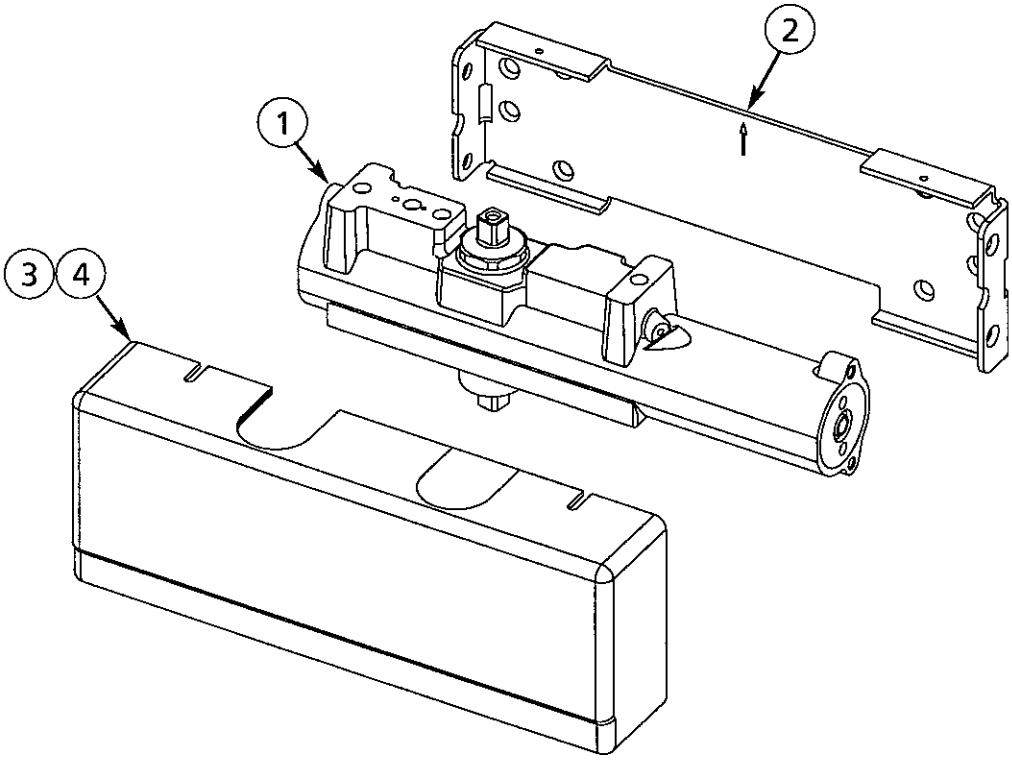

90902 10/25

Experience a safer
and more open world

The warranty on SARGENT® products becomes void if the product is modified in any way, regardless of whether the modification causes or contributes to any alleged defect. If a SARGENT product is modified it may no longer meet industry certification and quality control standards applicable to the original product and is no longer a genuine SARGENT product.

Copyright © 2019, 2025 Sargent Manufacturing Company, an ASSA ABLOY Group company. All rights reserved. Reproduction in whole or in part without the express written permission of Sargent Manufacturing Company is prohibited.

351 Series Door Closer
Body Assembly & Cover

SARGENT
ASSA ABLOY

Item	Part No.	Description
1	351-CB*	Closer body
	351DA-CB*	Delayed action closer body
2	351-C**	Plastic cover (non-handed)
3	351-CMC*	Metal cover - specify LH or RH when ordering (see note)
	63-3684*	Screw pack

*Finish required
**Powder coat finishes only
Note: specify arm being used

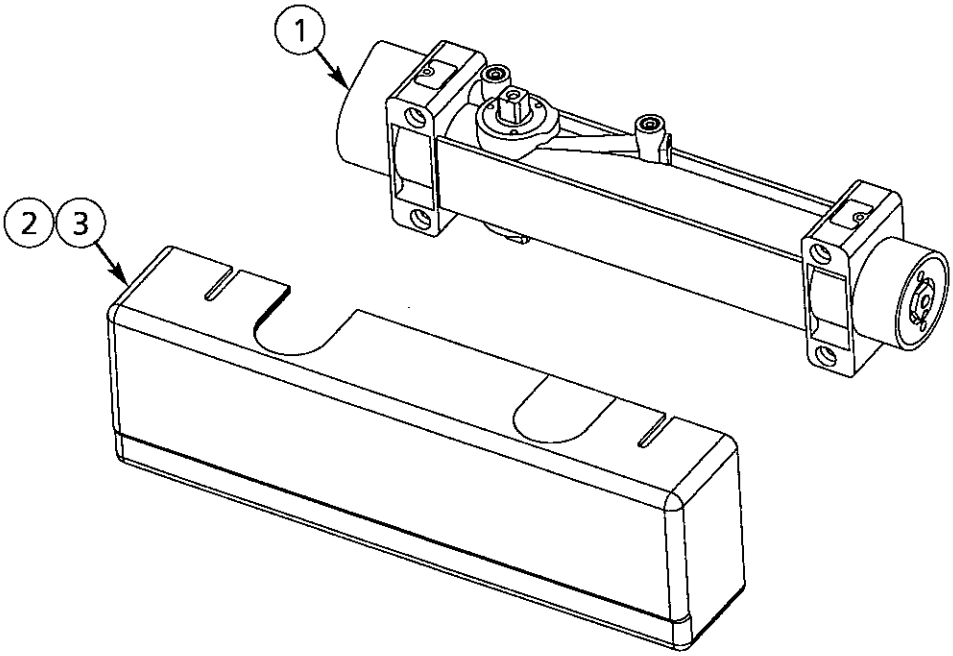

90902 10/25

The warranty on SARGENT® products becomes void if the product is modified in any way, regardless of whether the modification causes or contributes to any alleged defect. If a SARGENT product is modified it may no longer meet industry certification and quality control standards applicable to the original product and is no longer a genuine SARGENT product.

Copyright © 2019, 2025 Sargent Manufacturing Company, an ASSA ABLOY Group company. All rights reserved. Reproduction in whole or in part without the express written permission of Sargent Manufacturing Company is prohibited.

Experience a safer
and more open world

1431 Series Door Closer
Body Assembly & Cover

SARGENT
ASSA ABLOY

Item	Part No.	Description
1	1431-CB*	Closer body
	1431DA-CB*	Delayed action closer body
2	1431-C**	Plastic cover (non-handed)
3	1431-CMC*	Metal cover - specify LH or RH when ordering (see note)
	64-0180	Metal cover support
	64-0175	Plastic cover support
	64-2407*	Screw pack (includes 64-0175)

*Finish required
**Powder coat finishes only
Note: specify arm being used

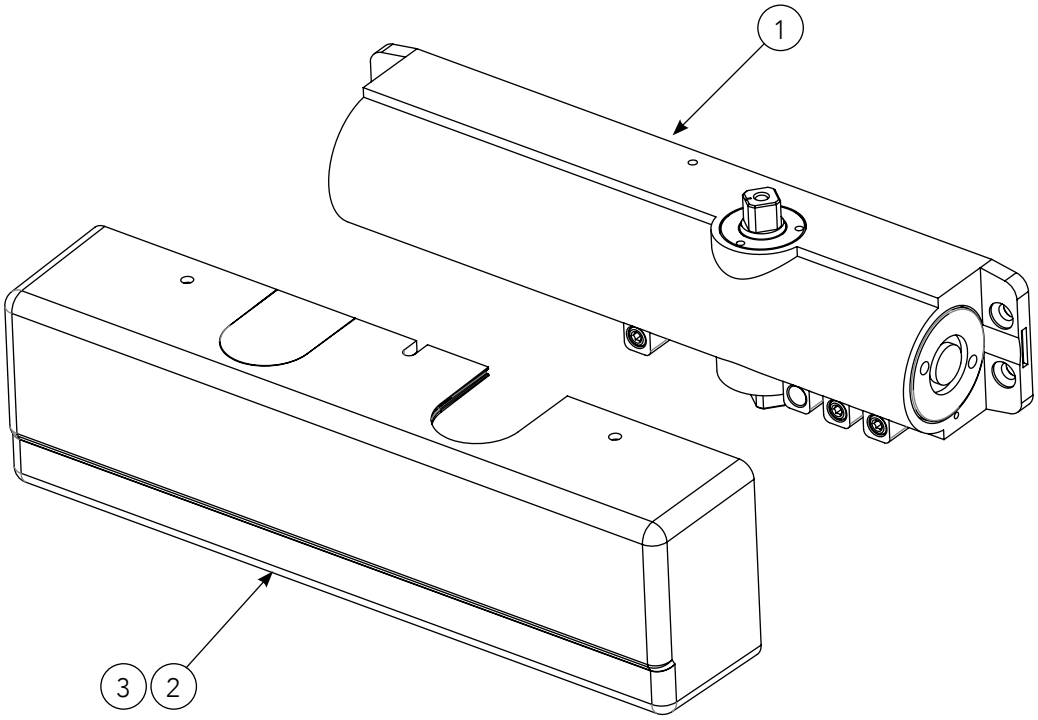

90902 10/25

Experience a safer
and more open world

The warranty on SARGENT® products becomes void if the product is modified in any way, regardless of whether the modification causes or contributes to any alleged defect. If a SARGENT product is modified it may no longer meet industry certification and quality control standards applicable to the original product and is no longer a genuine SARGENT product.

Copyright © 2019, 2025 Sargent Manufacturing Company, an ASSA ABLOY Group company. All rights reserved. Reproduction in whole or in part without the express written permission of Sargent Manufacturing Company is prohibited.

25-O/OZ/OZA REGULAR ARM

SARGENT
ASSA ABLOY

Item	Part No.	Description
1	63-2607*	Main arm & link assembly
2	63-2216*	O foot assembly (standard)
	63-2217*	OZ foot assembly
	63-2218*	OZA foot assembly
3	61-0308*	Swivel arm screw
	63-2391*	Screw pack

*Finish required

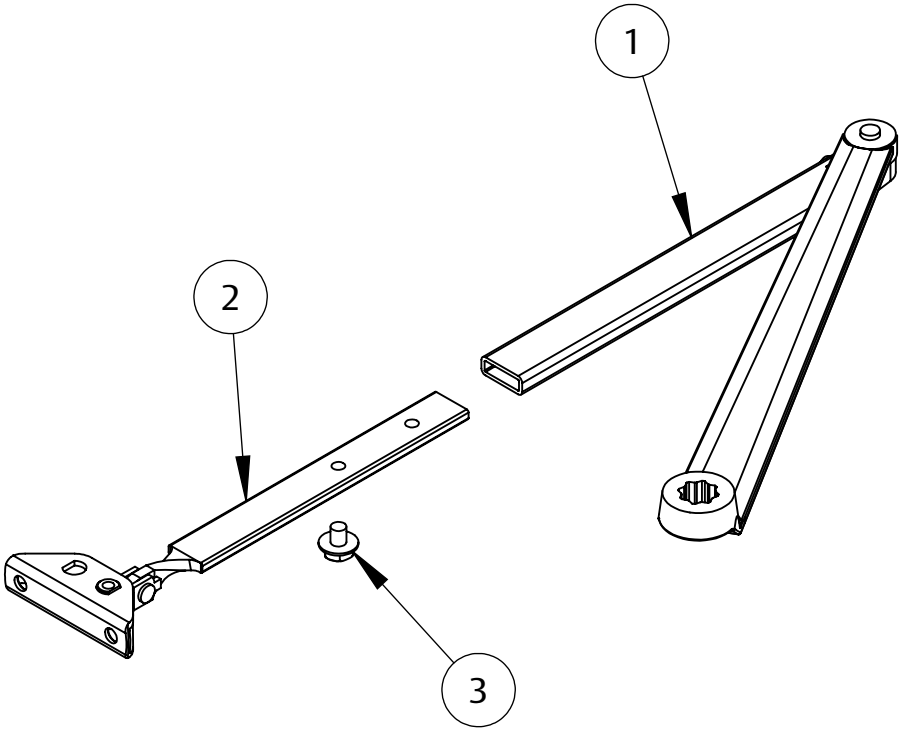

90902 10/25

The warranty on SARGENT® products becomes void if the product is modified in any way, regardless of whether the modification causes or contributes to any alleged defect. If a SARGENT product is modified it may no longer meet industry certification and quality control standards applicable to the original product and is no longer a genuine SARGENT product.

Copyright © 2019, 2025 Sargent Manufacturing Company, an ASSA ABLOY Group company. All rights reserved. Reproduction in whole or in part without the express written permission of Sargent Manufacturing Company is prohibited.

Experience a safer
and more open world

25-H / PH9 "UH" HOLDER ARM

SARGENT
ASSA ABLOY

Item	Part No.	Description
1	61-2303*	Foot assembly
2	63-3070*	Main arm & swivel assembly
3	61-0308*	Swivel arm screw
4	125-PH9*	Bracket assembly
	64-2407*, 63-2391*	Screw pack

*Finish required

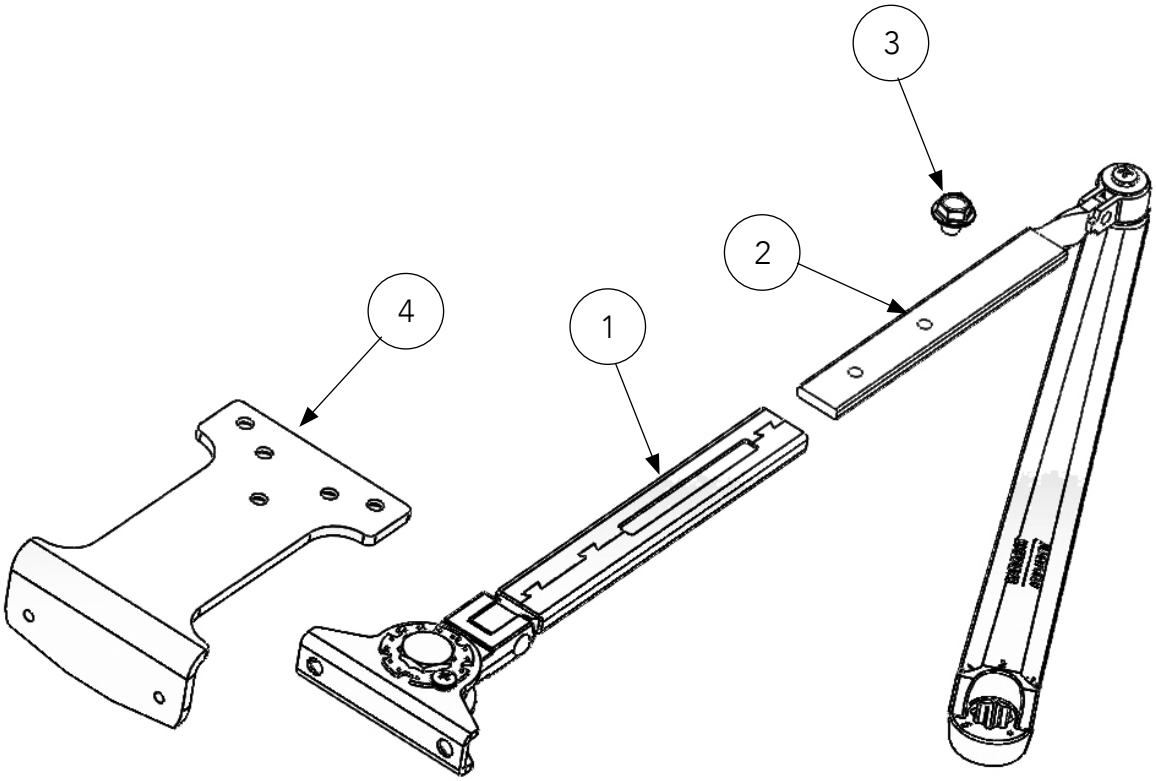

90902 10/25

Experience a safer
and more open world

The warranty on SARGENT® products becomes void if the product is modified in any way, regardless of whether the modification causes or contributes to any alleged defect. If a SARGENT product is modified it may no longer meet industry certification and quality control standards applicable to the original product and is no longer a genuine SARGENT product.

Copyright © 2019, 2025 Sargent Manufacturing Company, an ASSA ABLOY Group company. All rights reserved. Reproduction in whole or in part without the express written permission of Sargent Manufacturing Company is prohibited.

25-P9 PARALLEL ARM

SARGENT
ASSA ABLOY

Item	Part No.	Description
1	63-2607*	Main arm & link assembly
2	63-3405*	Foot assembly
3	125-P9*	Foot bracket
4	61-0308*	Swivel arm screw
	63-2391*, 64-2407*	Screw packs

*Finish required

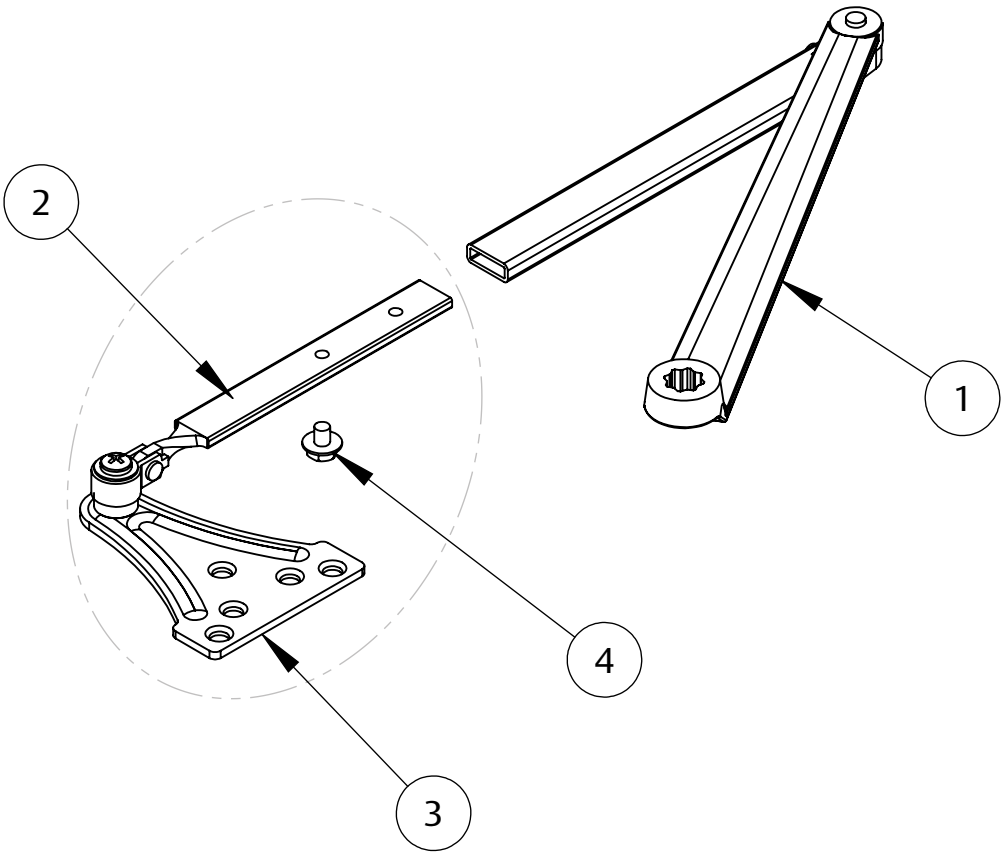

90902 10/25

The warranty on SARGENT® products becomes void if the product is modified in any way, regardless of whether the modification causes or contributes to any alleged defect. If a SARGENT product is modified it may no longer meet industry certification and quality control standards applicable to the original product and is no longer a genuine SARGENT product.

Copyright © 2019, 2025 Sargent Manufacturing Company, an ASSA ABLOY Group company. All rights reserved. Reproduction in whole or in part without the express written permission of Sargent Manufacturing Company is prohibited.

Experience a safer
and more open world

25-P10 HEAVY DUTY PARALLEL ARM

SARGENT
ASSA ABLOY

Item	Part No.	Description
1	63-3727*	Arm and bracket assembly
2	63-0641*	Main arm
3		Pivot
4		Screw (pivot)
5		Spacer
	63-2392*	Screw pack (includes items 3, 4 & 5)

*Finish required

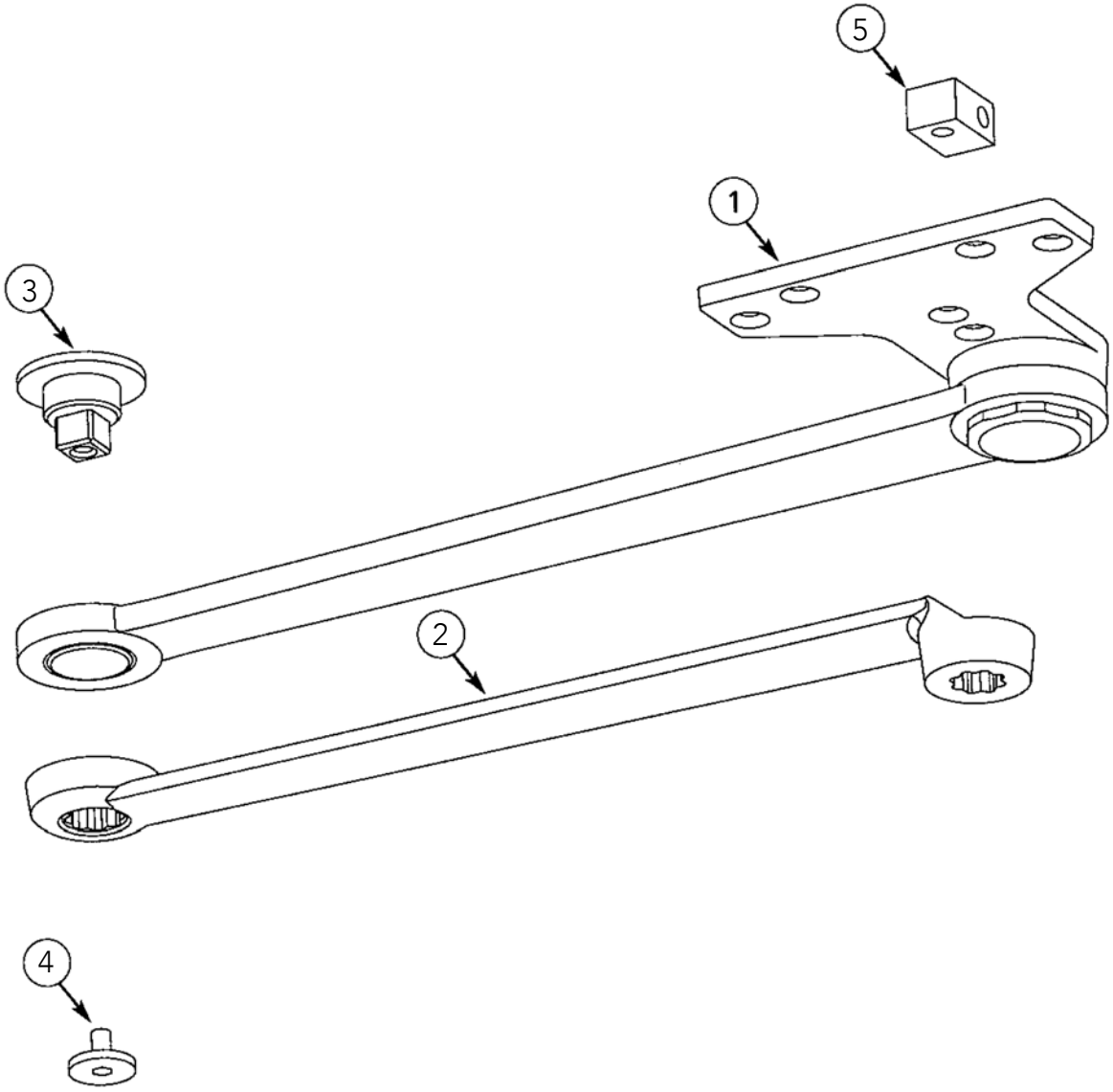

90902 10/25

Experience a safer
and more open world

The warranty on SARGENT® products becomes void if the product is modified in any way, regardless of whether the modification causes or contributes to any alleged defect. If a SARGENT product is modified it may no longer meet industry certification and quality control standards applicable to the original product and is no longer a genuine SARGENT product.

Copyright © 2019, 2025 Sargent Manufacturing Company, an ASSA ABLOY Group company. All rights reserved. Reproduction in whole or in part without the express written permission of Sargent Manufacturing Company is prohibited.

25-CPS HEAVY DUTY PARALLEL ARM WITH COMPRESSION STOP

SARGENT
ASSA ABLOY

Item	Part No.	Description
1	63-3830*	Bracket assembly pk
2	63-0641*	Main arm
3		Pivot
4		Screw (pivot)
5		Bumper holder
6		Bumper
7		Spacer
	63-3482*	Screw pack (includes items 3, 4, 5, 6, 7)

*Finish required

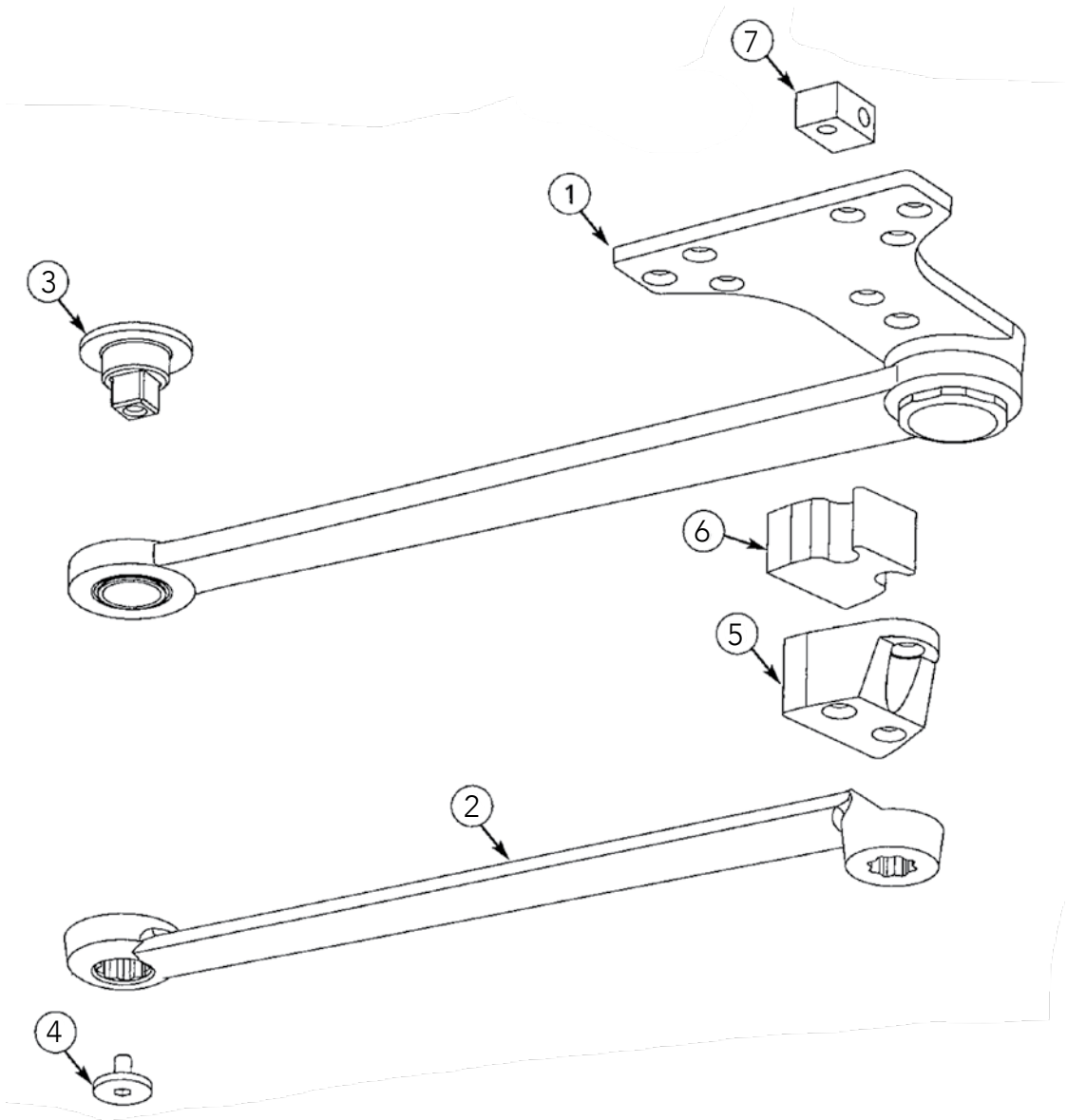

90902 10/25

The warranty on SARGENT® products becomes void if the product is modified in any way, regardless of whether the modification causes or contributes to any alleged defect. If a SARGENT product is modified it may no longer meet industry certification and quality control standards applicable to the original product and is no longer a genuine SARGENT product.

Copyright © 2019, 2025 Sargent Manufacturing Company, an ASSA ABLOY Group company. All rights reserved. Reproduction in whole or in part without the express written permission of Sargent Manufacturing Company is prohibited.

Experience a safer and more open world

25-CPSH HEAVY DUTY PARALLEL ARM WITH HOLD OPEN AND COMPRESSION STOP

SARGENT
ASSA ABLOY

Item	Part No.	Description
1	63-3836*	Bracket assembly pk
2	63-0641*	Main arm
3		Pivot
4		Screw (pivot)
5		Bumper holder
6		Bumper
7		Insert
8		Spacer
	63-3487*	Screw pack (includes items 3, 4, 5, 6, 7, 8)

*Finish required

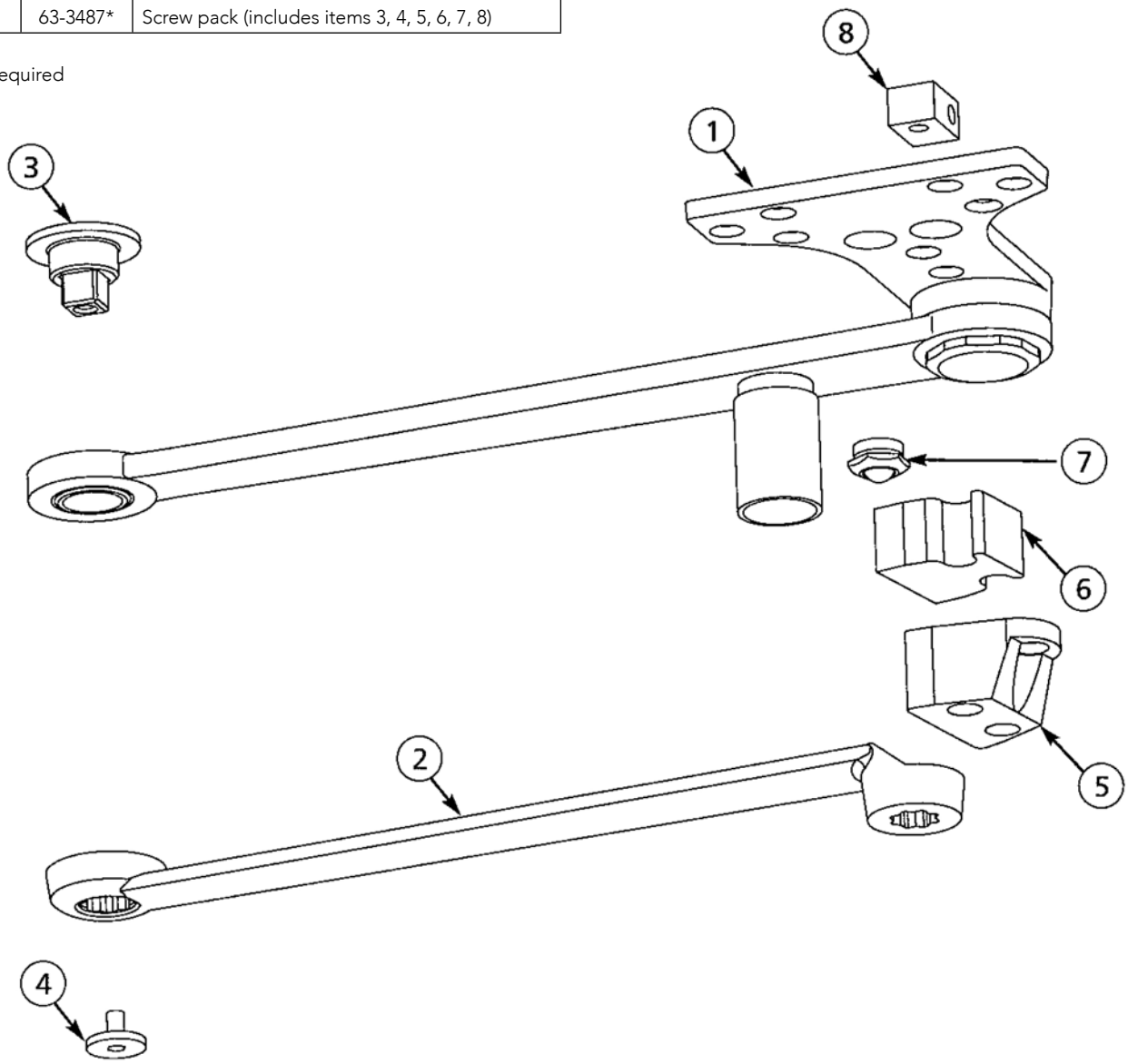

90902 10/25

Experience a safer
and more open world

The warranty on SARGENT® products becomes void if the product is modified in any way, regardless of whether the modification causes or contributes to any alleged defect. If a SARGENT product is modified it may no longer meet industry certification and quality control standards applicable to the original product and is no longer a genuine SARGENT product.

Copyright © 2019, 2025 Sargent Manufacturing Company, an ASSA ABLOY Group company. All rights reserved. Reproduction in whole or in part without the express written permission of Sargent Manufacturing Company is prohibited.

25-PS HEAVY DUTY PARALLEL ARM WITH STOP

SARGENT
ASSA ABLOY

Item	Part No.	Description
1	63-3837*	Arm and bracket assembly
2	63-0641*	Main arm
3	63-0211*	Stop
4	01-0864*	Hole plug
5		Pivot
6		Screw (pivot)
7		Spacer
	63-2392*, 63-2396*	Screw pack (includes items 5, 6, 7)

*Finish required

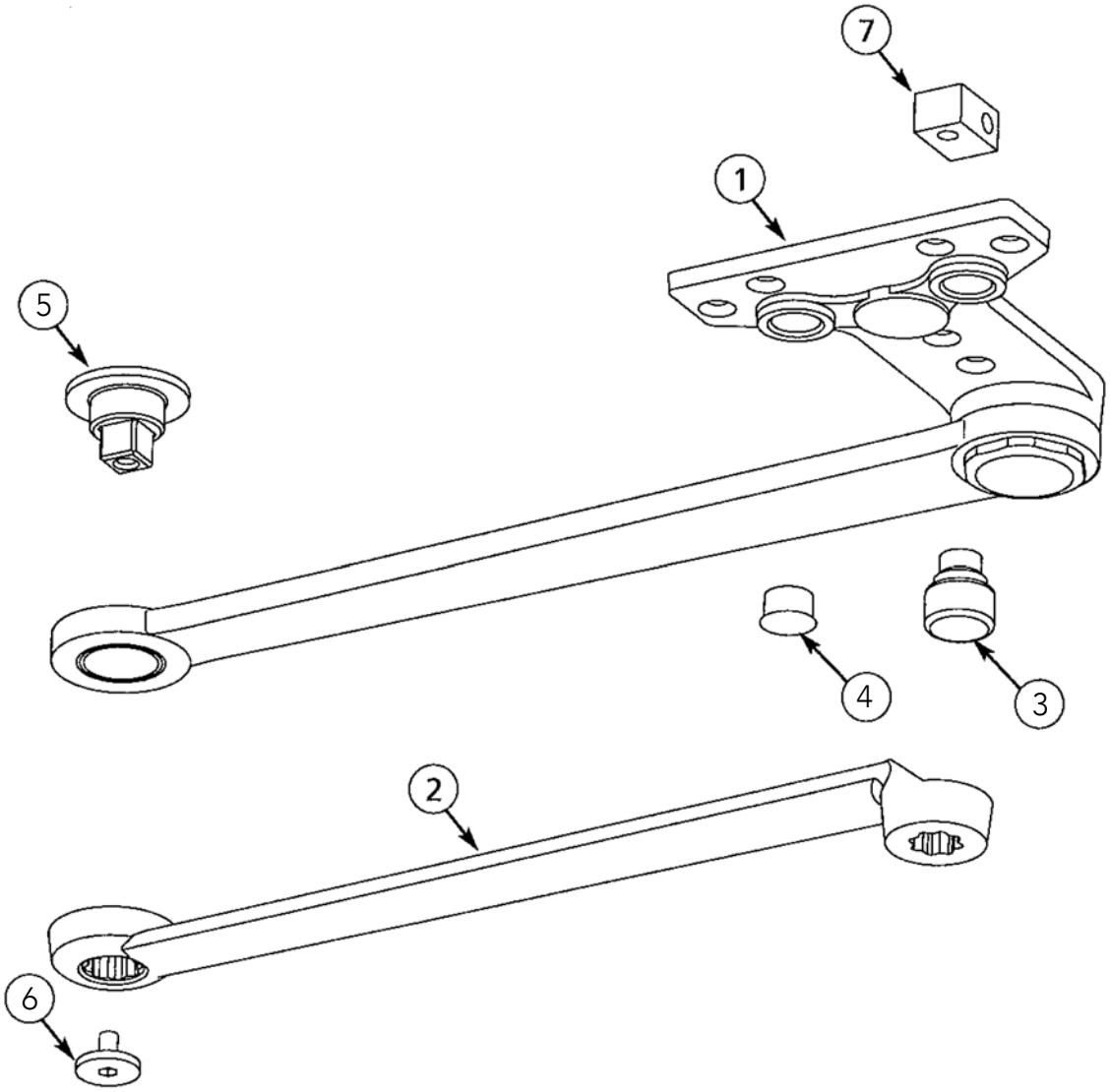

90902 10/25

The warranty on SARGENT® products becomes void if the product is modified in any way, regardless of whether the modification causes or contributes to any alleged defect. If a SARGENT product is modified it may no longer meet industry certification and quality control standards applicable to the original product and is no longer a genuine SARGENT product.

Copyright © 2019, 2025 Sargent Manufacturing Company, an ASSA ABLOY Group company. All rights reserved. Reproduction in whole or in part without the express written permission of Sargent Manufacturing Company is prohibited.

Experience a safer
and more open world

25-PSH HEAVY DUTY PARALLEL ARM WITH HOLD OPEN AND STOP

SARGENT
ASSA ABLOY

Item	Part No.	Description
1	63-3833*	Arm and bracket assembly
2	63-0641*	Main arm
3	63-0211*	Stop
4	01-0864*	Hole plug
5		Pivot
6		Screw (pivot)
7		Spacer
	63-2392*, 63-2396*	Screw pack (includes items 5, 6, 7)

*Finish required

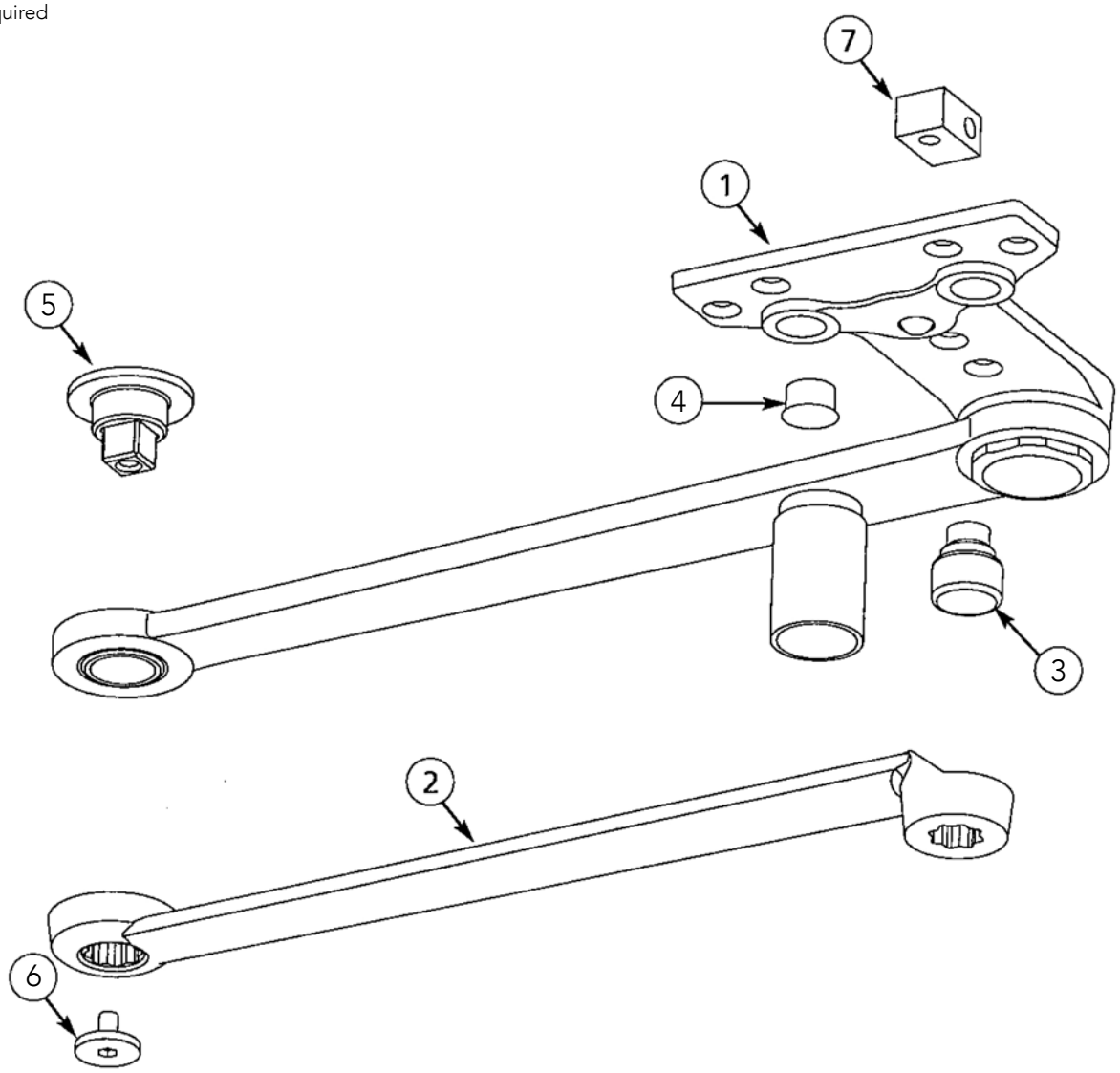

90902 10/25

Experience a safer
and more open world

The warranty on SARGENT® products becomes void if the product is modified in any way, regardless of whether the modification causes or contributes to any alleged defect. If a SARGENT product is modified it may no longer meet industry certification and quality control standards applicable to the original product and is no longer a genuine SARGENT product.

Copyright © 2019, 2025 Sargent Manufacturing Company, an ASSA ABLOY Group company. All rights reserved. Reproduction in whole or in part without the express written permission of Sargent Manufacturing Company is prohibited.

25-OT TRACK TYPE ARM, PULL SIDE

SARGENT
ASSA ABLOY

Item	Part No.	Description
1	63-0156*	Channel pull
2	63-3901*	Main arm assembly (includes 3, 4, 5, 6)
3		Main arm
4		Roller assembly
5		Washer
6		Roller bushing
7	63-0682*	End cap
	63-3482*	Screw pack

*Finish required

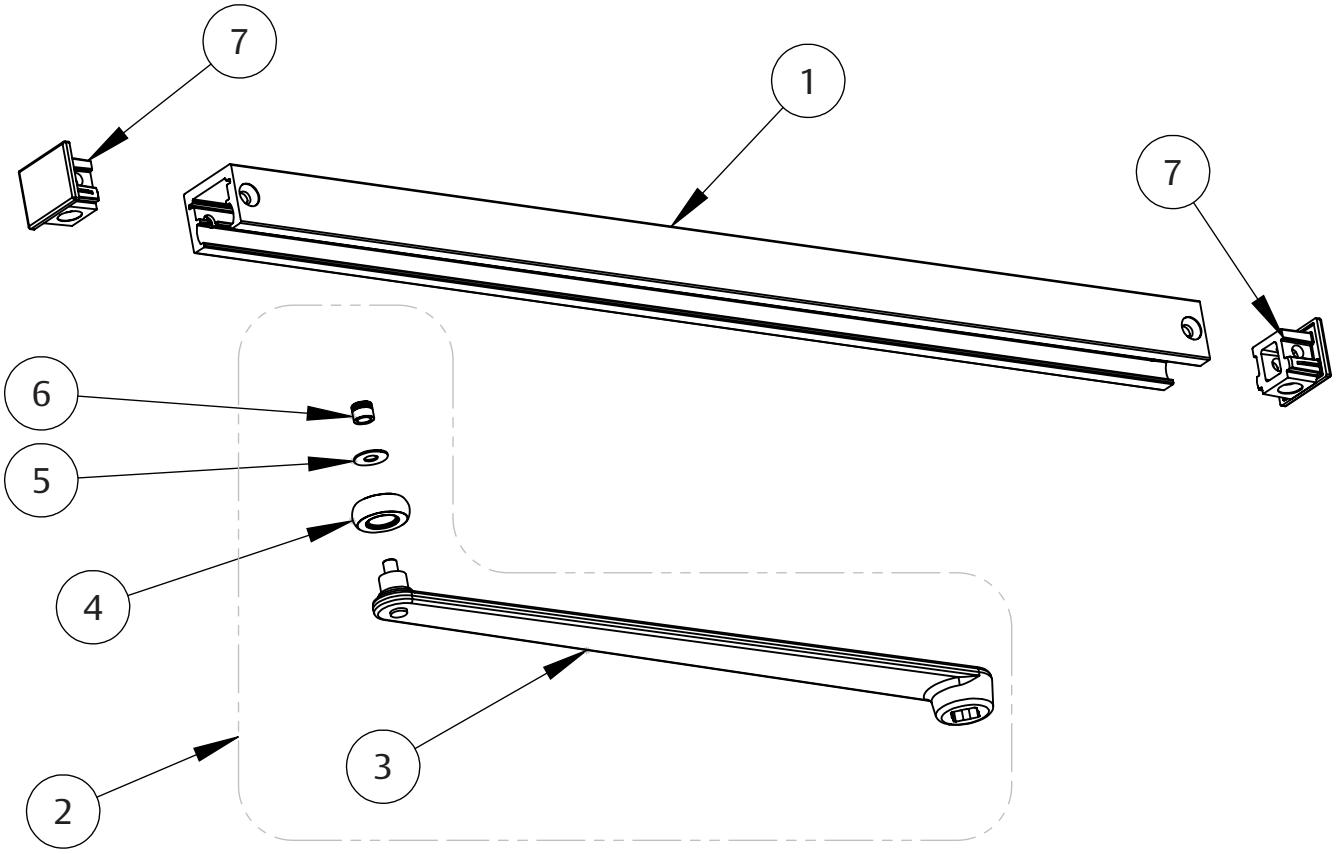

90902 10/25

The warranty on SARGENT® products becomes void if the product is modified in any way, regardless of whether the modification causes or contributes to any alleged defect. If a SARGENT product is modified it may no longer meet industry certification and quality control standards applicable to the original product and is no longer a genuine SARGENT product.

Copyright © 2019, 2025 Sargent Manufacturing Company, an ASSA ABLOY Group company. All rights reserved. Reproduction in whole or in part without the express written permission of Sargent Manufacturing Company is prohibited.

Experience a safer
and more open world

25-OTB TRACK TYPE ARM WITH BUMPER, PULL SIDE

SARGENT
ASSA ABLOY

Item	Part No.	Description
	63-2706*	Channel Assembly (includes 1, 2, 7, 8)
1	63-0157*	Channel pull
2	63-0682*	End cap
3	63-3901*	Main arm assembly (includes 4, 5, 6)
4		Roller bushing
5		Washer
6		Roller & bearing assembly
7	63-0377	Bumper
8	63-0396	Bumper stop
	63-3482*	Screw pack

*Finish required

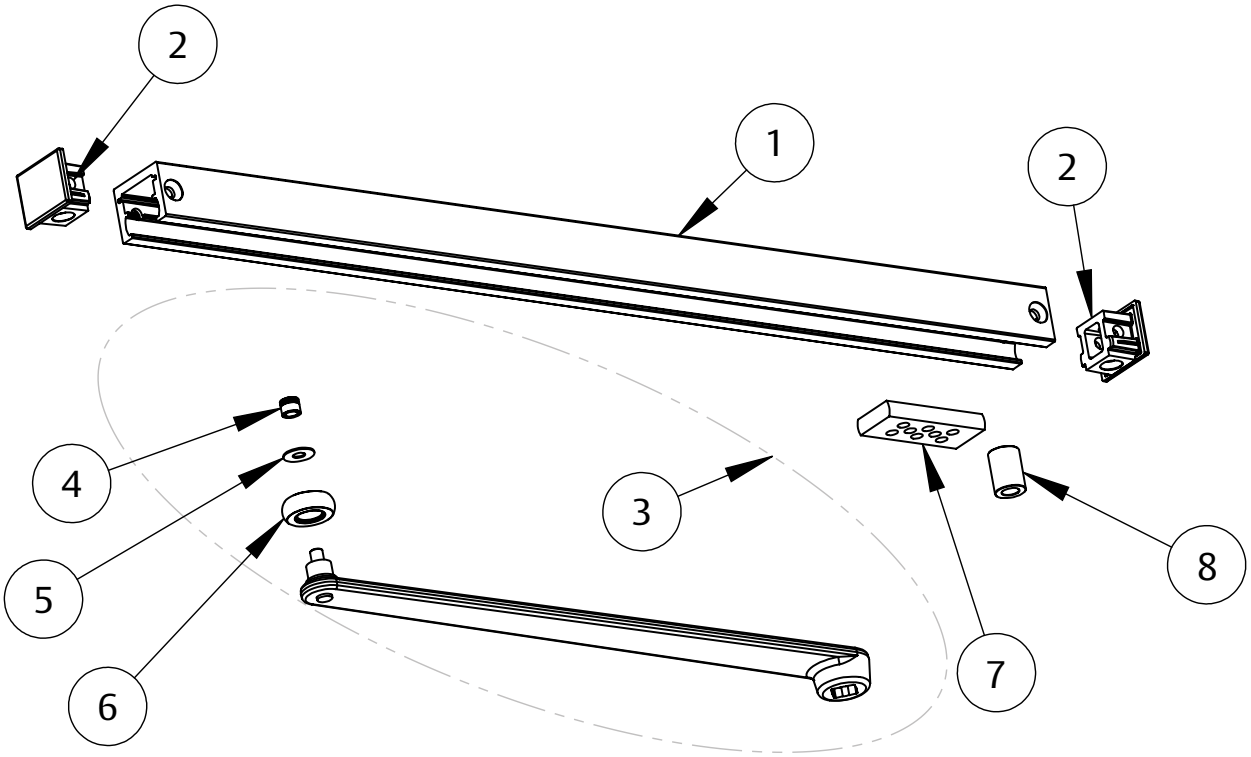

90902 10/25

Experience a safer
and more open world

The warranty on SARGENT® products becomes void if the product is modified in any way, regardless of whether the modification causes or contributes to any alleged defect. If a SARGENT product is modified it may no longer meet industry certification and quality control standards applicable to the original product and is no longer a genuine SARGENT product.

Copyright © 2019, 2025 Sargent Manufacturing Company, an ASSA ABLOY Group company. All rights reserved. Reproduction in whole or in part without the express written permission of Sargent Manufacturing Company is prohibited.

25-HT TRACK TYPE ARM WITH HOLD OPEN, PULL SIDE

SARGENT
ASSA ABLOY

Item	Part No.	Description
	63-2448*	Channel Assembly (includes 1, 2, 8, 9)
1	63-0157*	Channel pull
2	63-0682*	End cap
3	63-3901*	Main arm assembly (includes 4, 5, 6, 7)
4		Main arm
5		Roller bushing
6		Washer
7		Roller & bearing assembly
8	63-2063	Spring slide assembly
9	63-0678	Spring support
	63-3482*	Screw pack

*Finish required

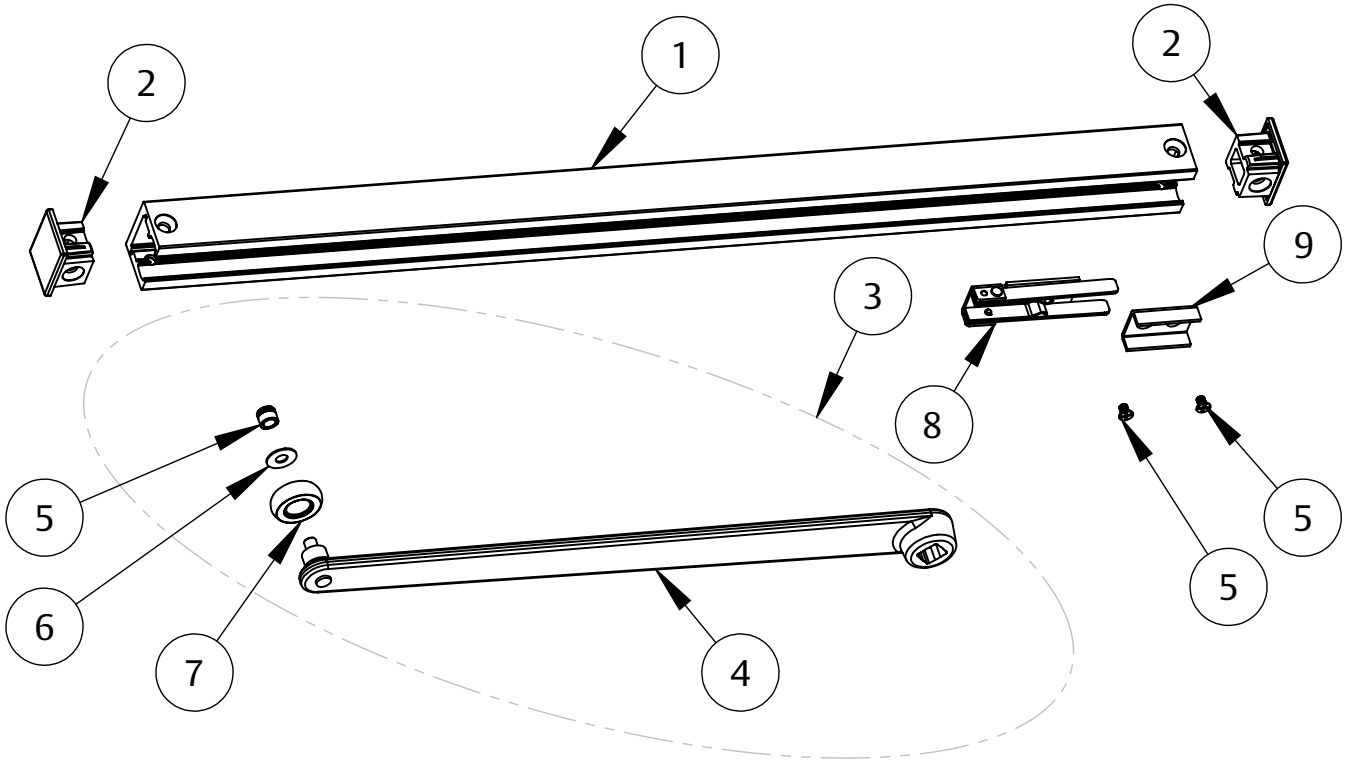

90902 10/25

The warranty on SARGENT® products becomes void if the product is modified in any way, regardless of whether the modification causes or contributes to any alleged defect. If a SARGENT product is modified it may no longer meet industry certification and quality control standards applicable to the original product and is no longer a genuine SARGENT product.

Copyright © 2019, 2025 Sargent Manufacturing Company, an ASSA ABLOY Group company. All rights reserved. Reproduction in whole or in part without the express written permission of Sargent Manufacturing Company is prohibited.

Experience a safer
and more open world

25-HTB TRACK TYPE, HOLD OPEN WITH BUMPER, PULL SIDE

SARGENT
ASSA ABLOY

Item	Part No.	Description
	63-2707*	Channel Assembly (includes 1, 2, 7, 8, 9, 10)
1	63-0157*	Channel pull
2	63-0682*	End cap
3	63-3901*	Main arm assembly (includes 4, 5, 6)
4		Roller bushing
5		Washer
6		Roller & bearing assembly
7	63-0377	Bumper
8	63-0396	Bumper stop
9	63-0678	Spring support
10	63-2063	Spring slide assembly
	63-3482*	Screw pack

*Finish required

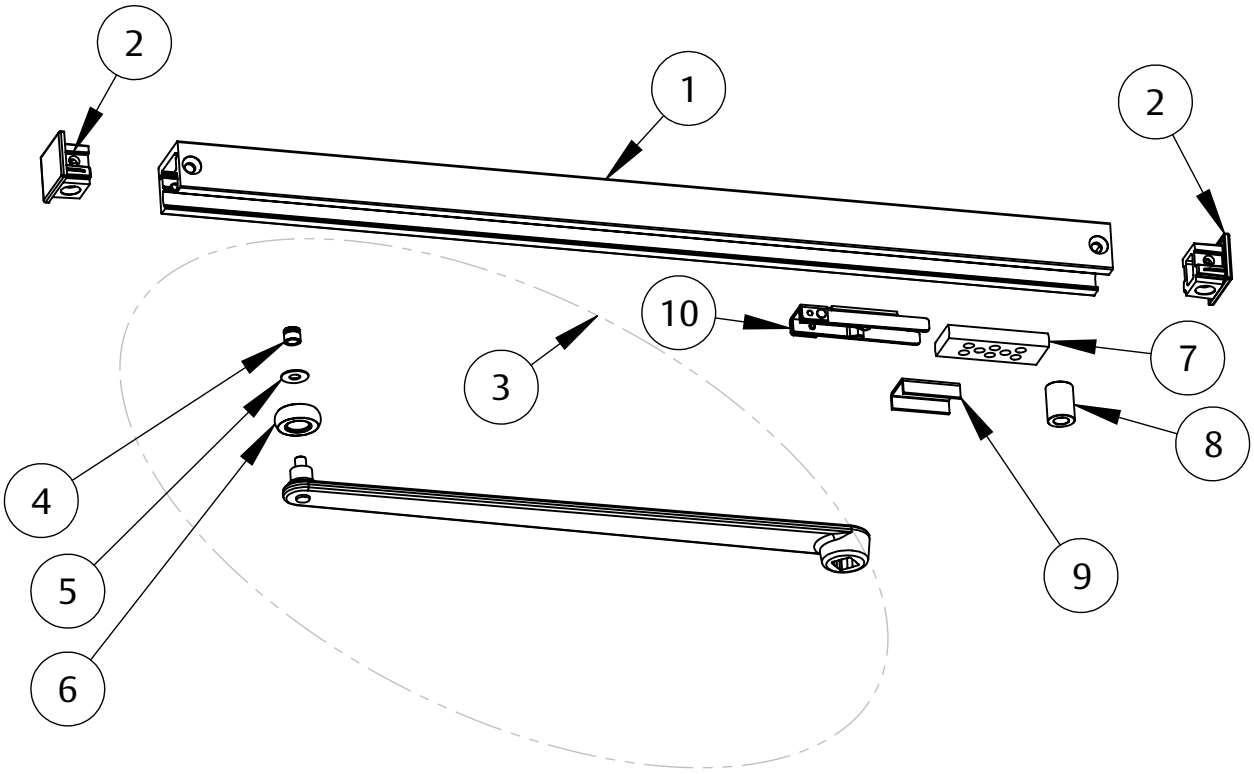

90902 10/25

Experience a safer
and more open world

The warranty on SARGENT® products becomes void if the product is modified in any way, regardless of whether the modification causes or contributes to any alleged defect. If a SARGENT product is modified it may no longer meet industry certification and quality control standards applicable to the original product and is no longer a genuine SARGENT product.

Copyright © 2019, 2025 Sargent Manufacturing Company, an ASSA ABLOY Group company. All rights reserved. Reproduction in whole or in part without the express written permission of Sargent Manufacturing Company is prohibited.

25-POT TRACK TYPE ARM, PUSH SIDE

Item	Part No.	Description
1	63-0159*	Channel pull
2	63-0682*	End cap
3	63-3901*	Main arm assembly (includes 4, 5, 6)
4		Roller bushing
5		Washer
6		Roller & bearing assembly
	63-3482*	Screw pack

*Finish required

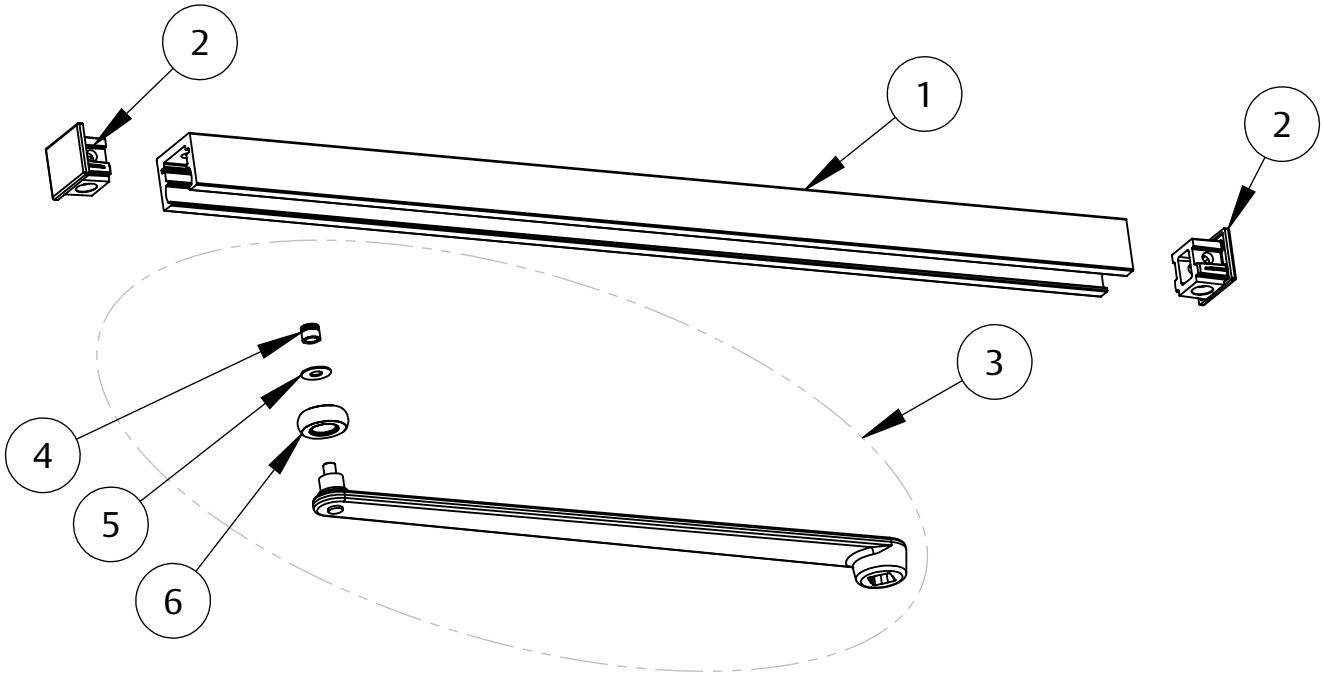

90902 10/25

The warranty on SARGENT® products becomes void if the product is modified in any way, regardless of whether the modification causes or contributes to any alleged defect. If a SARGENT product is modified it may no longer meet industry certification and quality control standards applicable to the original product and is no longer a genuine SARGENT product.

Copyright © 2019, 2025 Sargent Manufacturing Company, an ASSA ABLOY Group company. All rights reserved. Reproduction in whole or in part without the express written permission of Sargent Manufacturing Company is prohibited.

Experience a safer and more open world

25-POTB TRACK TYPE ARM WITH BUMPER, PUSH SIDE

SARGENT
ASSA ABLOY

Item	Part No.	Description
	63-2480*	Channel Assembly (includes 1, 2, 7, 8)
1	63-0159*	Channel pull
2	63-0682*	End cap
3	63-3901*	Main arm assembly (includes 4, 5, 6)
4		Roller bushing
5		Washer
6		Roller & bearing assembly
7	63-0377	Bumper
8	63-0396	Bumper stop
	63-3482*	Screw pack

*Finish required

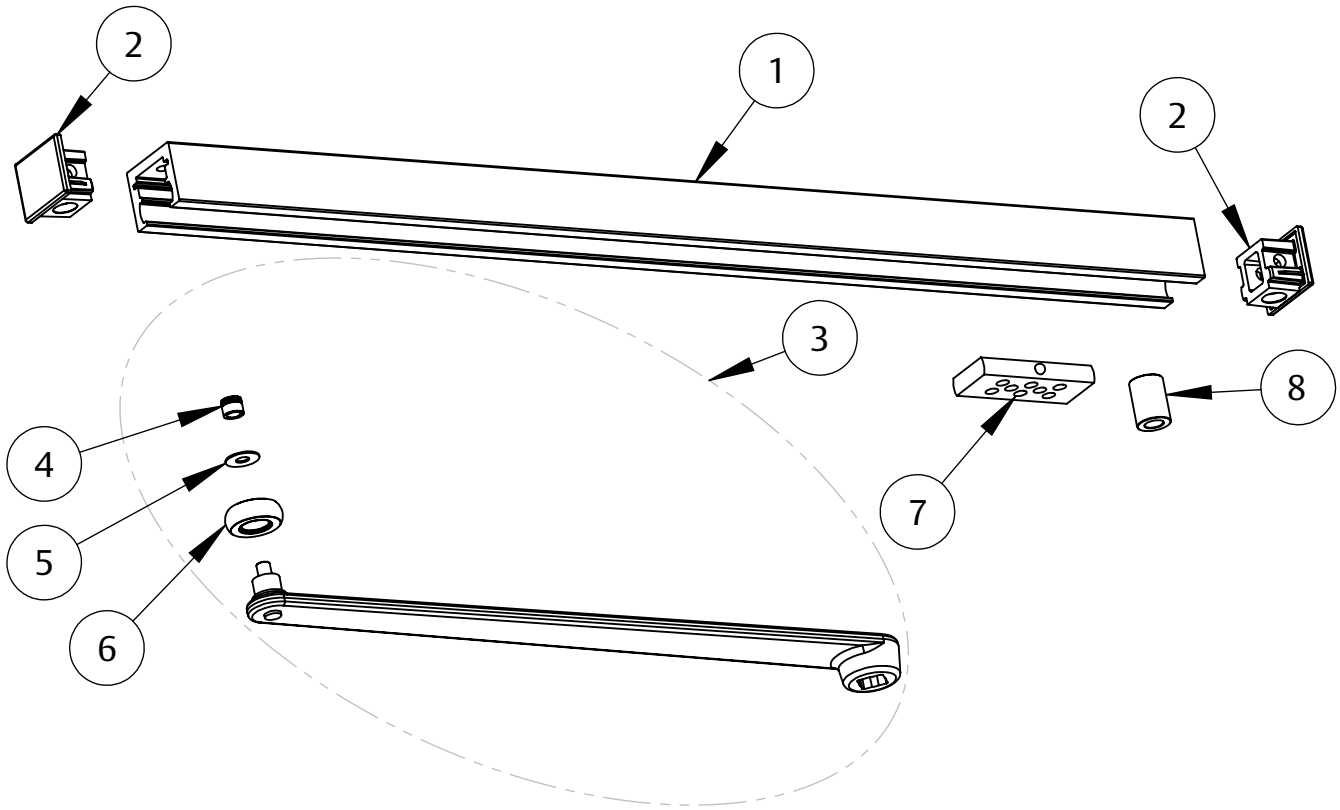

90902 10/25

The warranty on SARGENT® products becomes void if the product is modified in any way, regardless of whether the modification causes or contributes to any alleged defect. If a SARGENT product is modified it may no longer meet industry certification and quality control standards applicable to the original product and is no longer a genuine SARGENT product.

Copyright © 2019, 2025 Sargent Manufacturing Company, an ASSA ABLOY Group company. All rights reserved. Reproduction in whole or in part without the express written permission of Sargent Manufacturing Company is prohibited.

25-PHT TRACK TYPE ARM WITH HOLD OPEN, PUSH SIDE

SARGENT
ASSA ABLOY

Item	Part No.	Description
	63-2445*	Channel Assembly (includes 1, 2, 7, 8)
1	63-0159*	Channel push
2	63-0682*	End cap
3	63-3901*	Main arm assembly (includes 4, 5, 6)
4		Roller bushing
5		Washer
6		Roller & bearing assembly
7	63-2063	Spring slide assembly
8	63-0678	Spring support
	63-3482*	Screw pack

*Finish required

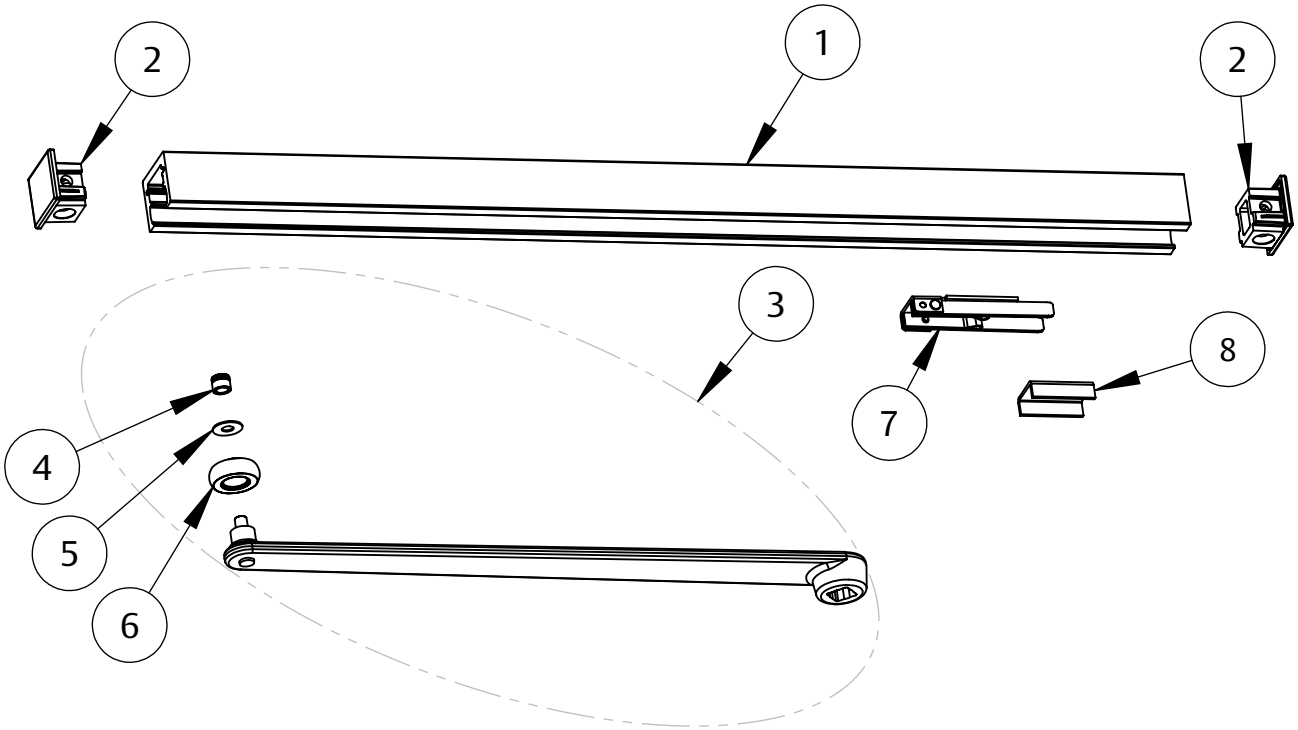

90902 10/25

The warranty on SARGENT® products becomes void if the product is modified in any way, regardless of whether the modification causes or contributes to any alleged defect. If a SARGENT product is modified it may no longer meet industry certification and quality control standards applicable to the original product and is no longer a genuine SARGENT product.

Copyright © 2019, 2025 Sargent Manufacturing Company, an ASSA ABLOY Group company. All rights reserved. Reproduction in whole or in part without the express written permission of Sargent Manufacturing Company is prohibited.

Experience a safer and more open world

25-PHTB TRACK TYPE ARM, HOLD OPEN WITH BUMPER, PUSH SIDE

SARGENT
ASSA ABLOY

Item	Part No.	Description
	63-2841*	Channel Assembly (includes 1, 2, 7, 8, 9, 10)
1	63-0159*	Channel push
2	63-0682*	End cap
3	63-3901*	Main arm assembly (includes 4, 5, 6)
4		Roller bushing
5		Washer
6		Roller & bearing assembly
7	63-0377	Bumper
8	63-0396	Bumper stop
9	63-0678	Spring support
10	63-2063	Spring slide assembly
	63-3482*	Screw pack

*Finish required

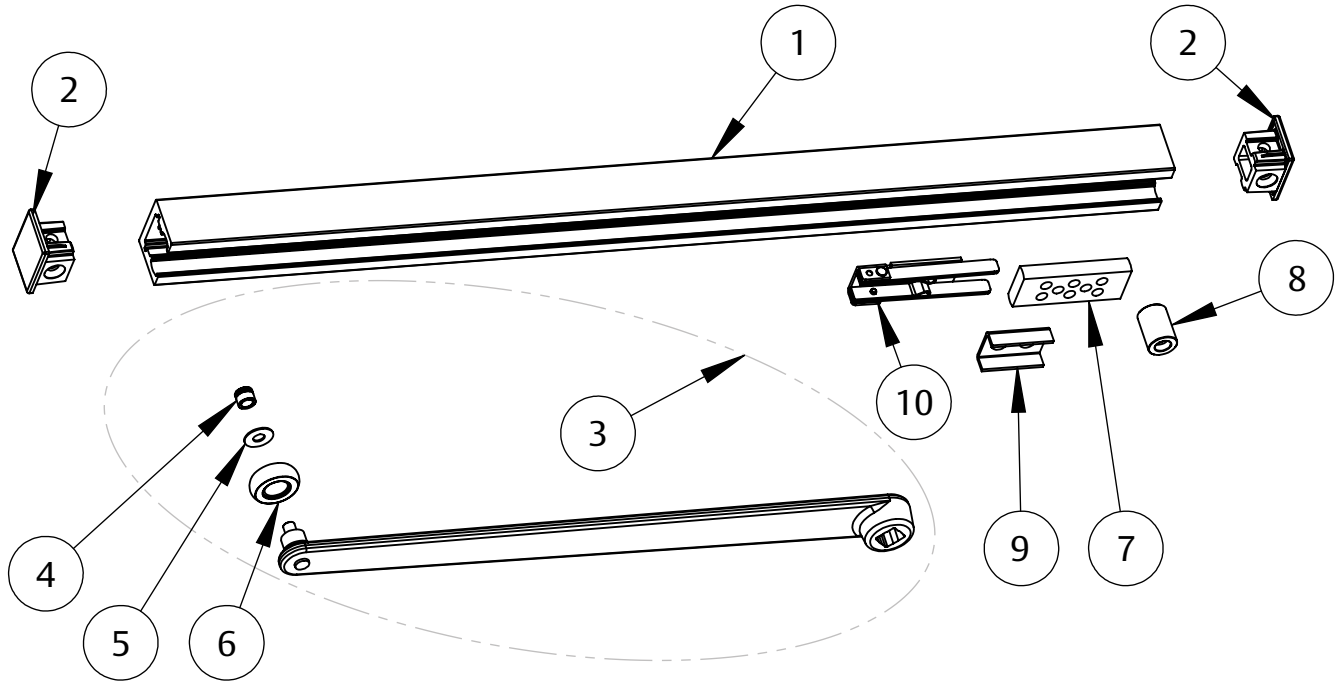

90902 10/25

Experience a safer
and more open world

The warranty on SARGENT® products becomes void if the product is modified in any way, regardless of whether the modification causes or contributes to any alleged defect. If a SARGENT product is modified it may no longer meet industry certification and quality control standards applicable to the original product and is no longer a genuine SARGENT product.

Copyright © 2019, 2025 Sargent Manufacturing Company, an ASSA ABLOY Group company. All rights reserved. Reproduction in whole or in part without the express written permission of Sargent Manufacturing Company is prohibited.

25-OD TRACK TYPE ARM, DOUBLE EGRESS

SARGENT
ASSA ABLOY

Item	Part No.	Description
1	63-0156*	Channel pull
2	63-0682*	End cap
3	63-3905	Roller assembly
4	63-3656*	Double egress arm, LH
	63-3657*	Double egress arm, RH
	63-3482*	Screw pack

*Finish required

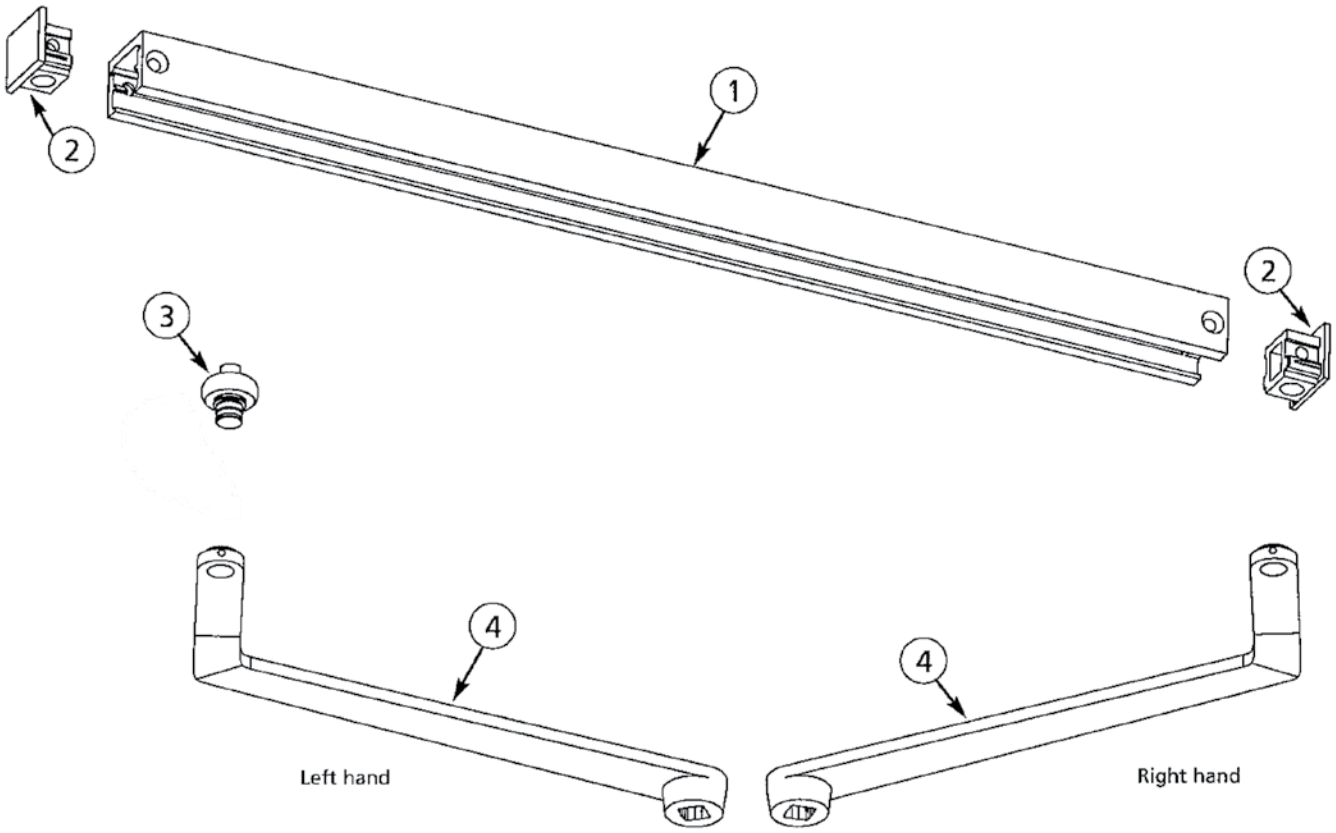

90902 10/25

The warranty on SARGENT® products becomes void if the product is modified in any way, regardless of whether the modification causes or contributes to any alleged defect. If a SARGENT product is modified it may no longer meet industry certification and quality control standards applicable to the original product and is no longer a genuine SARGENT product.

Copyright © 2019, 2025 Sargent Manufacturing Company, an ASSA ABLOY Group company. All rights reserved. Reproduction in whole or in part without the express written permission of Sargent Manufacturing Company is prohibited.

Experience a safer
and more open world

25-ODB TRACK TYPE ARM WITH BUMPER, DOUBLE EGRESS

SARGENT
ASSA ABLOY

Item	Part No.	Description
	63-2706*	Channel Assembly (includes 1, 2, 5, 6)
1	63-0157*	Channel pull
2	63-0682*	End cap
3	63-3905	Roller assembly
4	63-3656*	Double egress arm, LH
	63-3657*	Double egress arm, RH
5	63-0396	Bumper stop
6	63-0377	Bumper
	63-3482*	Screw pack

*Finish required

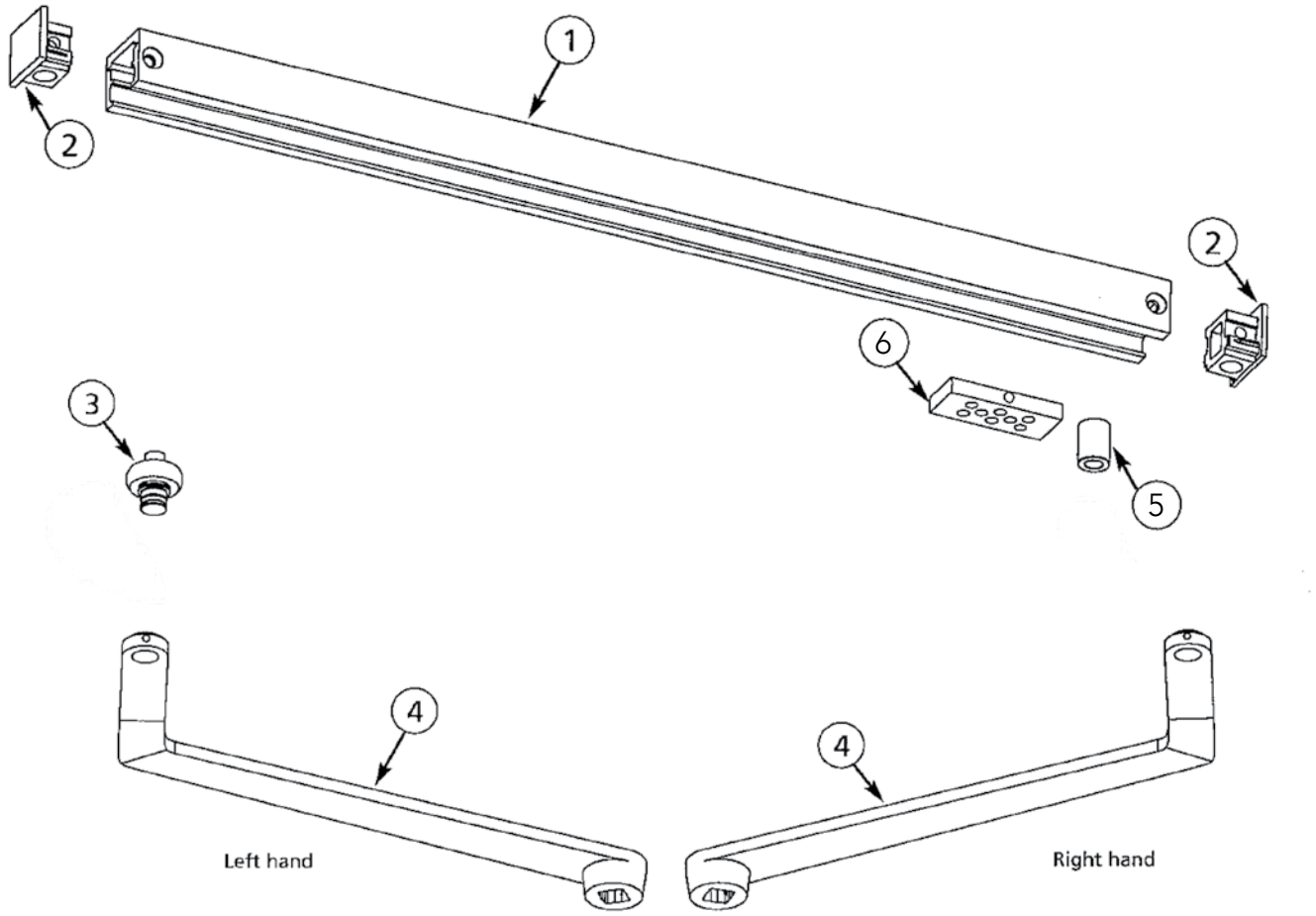

90902 10/25

Experience a safer
and more open world

The warranty on SARGENT® products becomes void if the product is modified in any way, regardless of whether the modification causes or contributes to any alleged defect. If a SARGENT product is modified it may no longer meet industry certification and quality control standards applicable to the original product and is no longer a genuine SARGENT product.

Copyright © 2019, 2025 Sargent Manufacturing Company, an ASSA ABLOY Group company. All rights reserved. Reproduction in whole or in part without the express written permission of Sargent Manufacturing Company is prohibited.

25-HD TRACK TYPE ARM WITH HOLD OPEN, DOUBLE EGRESS

SARGENT
ASSA ABLOY

Item	Part No.	Description
	63-2448*	Channel assembly (includes 1, 2, 5, 6)
1	63-0157*	Channel pull
2	63-0682*	End cap
3	63-3905	Roller Assembly
4	63-3656*	Double egress arm, LH
	63-3657*	Double egress arm, RH
5	63-2063	Spring slide assembly
6	63-0678	Spring support
	63-3482*	Screw pack

*Finish required

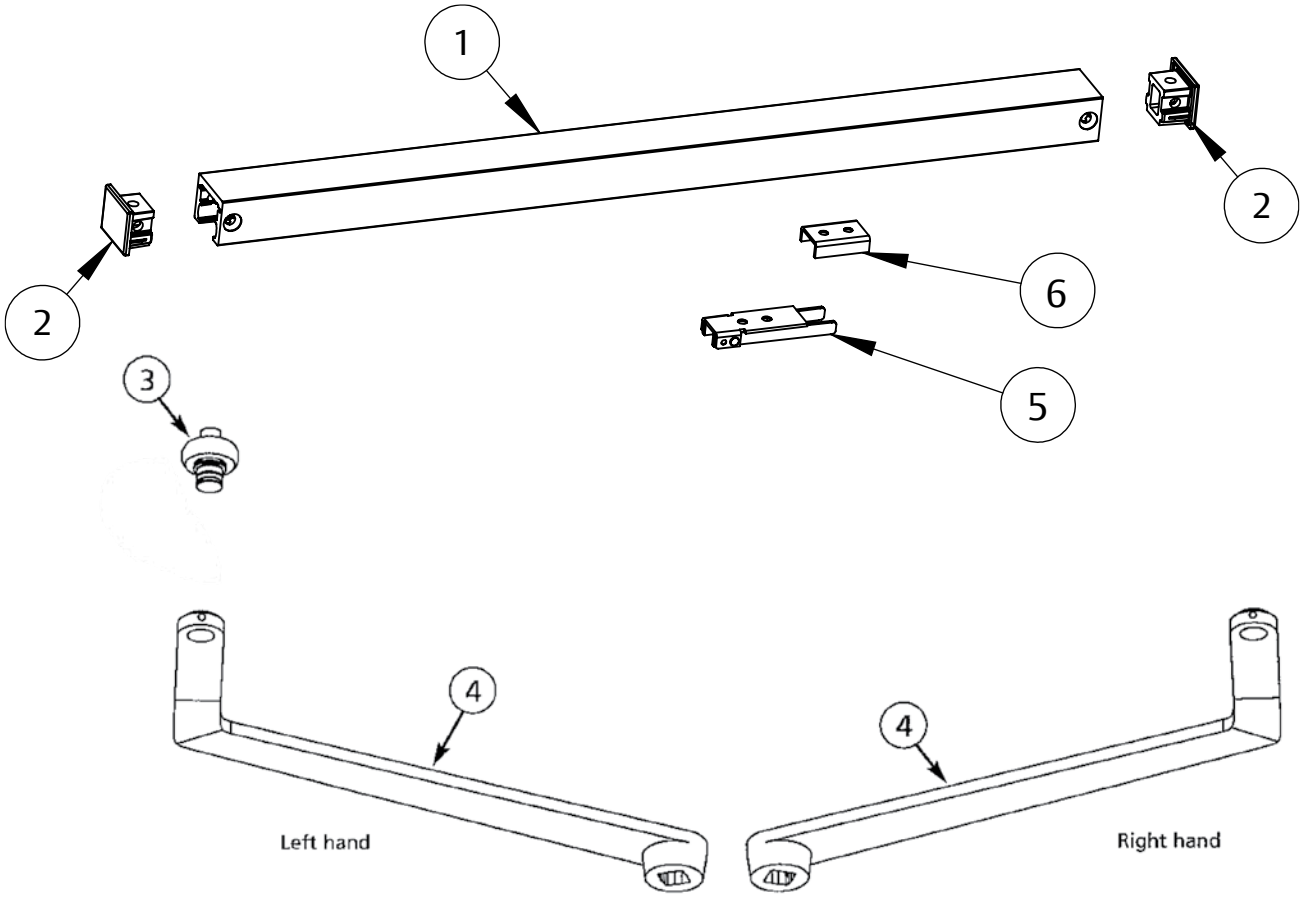

90902 10/25

The warranty on SARGENT® products becomes void if the product is modified in any way, regardless of whether the modification causes or contributes to any alleged defect. If a SARGENT product is modified it may no longer meet industry certification and quality control standards applicable to the original product and is no longer a genuine SARGENT product.

Copyright © 2019, 2025 Sargent Manufacturing Company, an ASSA ABLOY Group company. All rights reserved. Reproduction in whole or in part without the express written permission of Sargent Manufacturing Company is prohibited.

Experience a safer and more open world

25-HDB ARM AND TRACK ASSEMBLY

SARGENT
ASSA ABLOY

Item	Part No.	Description
	63-2707*	Channel Assembly (includes 1, 2, 5, 6, 7, 8)
1	63-0157*	Channel pull
2	63-0682*	End cap
3	63-3905	Roller assembly
4	63-3656*	Double egress arm, LH
	63-3657*	Double egress arm, RH --
5	63-2063	Spring slide assembly
6	63-0678	Spring support
7	63-0377	Bumper
8	63-0396	Bumper stop
	63-3482*	Screw pack

*Finish required

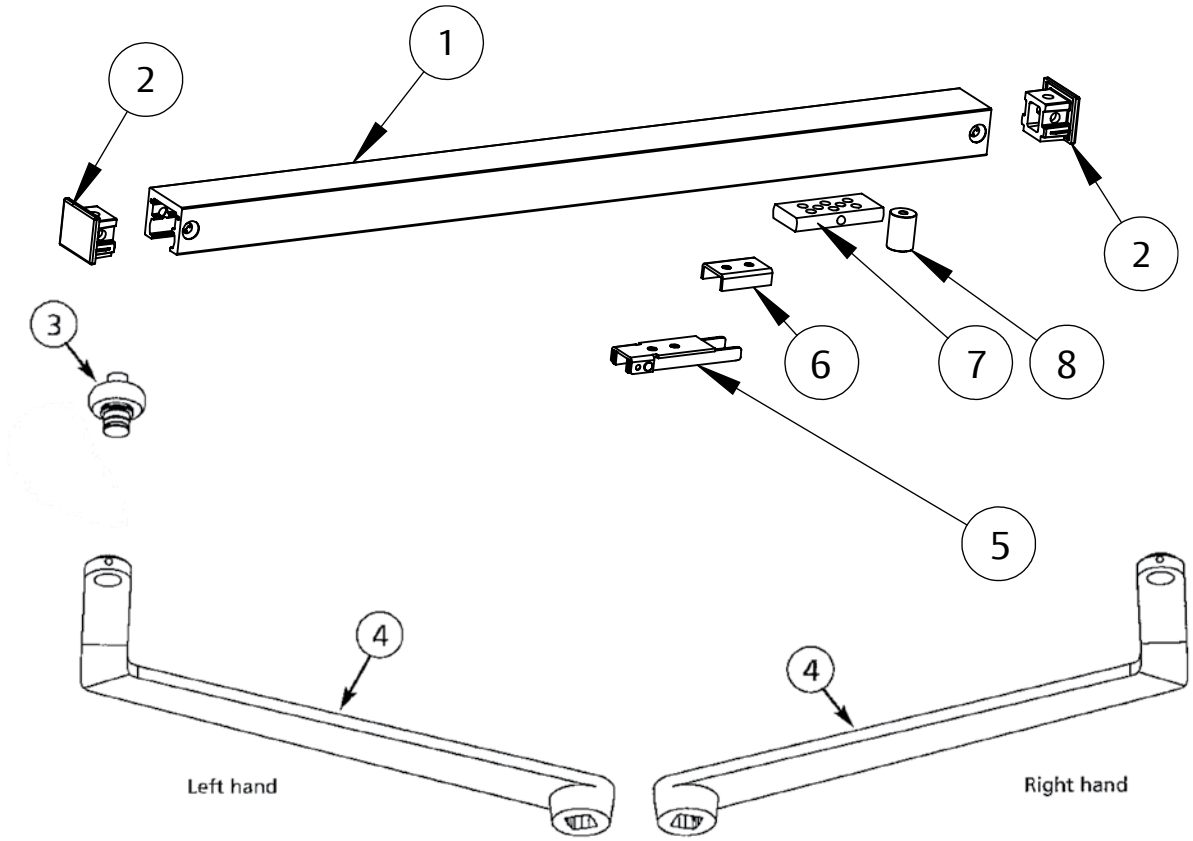

90902 10/25

Experience a safer
and more open world

The warranty on SARGENT® products becomes void if the product is modified in any way, regardless of whether the modification causes or contributes to any alleged defect. If a SARGENT product is modified it may no longer meet industry certification and quality control standards applicable to the original product and is no longer a genuine SARGENT product.

Copyright © 2019, 2025 Sargent Manufacturing Company, an ASSA ABLOY Group company. All rights reserved. Reproduction in whole or in part without the express written permission of Sargent Manufacturing Company is prohibited.

25-ODS ARM AND TRACK ASSEMBLY
-USE WITH 351 SERIES DOOR CLOSER ONLY-

SARGENT
ASSA ABLOY

Item	Part No.	Description
1	63-0156*	Channel pull
2	63-0682*	End cap
3	63-4206*	Arm and roller assembly (includes 4, 5, 6, 7)
4	63-4276*	Arm and stud assembly
5		Roller assembly
6		Washer
7		Bushing
8	63-3056*	Double egress arm, RH
	63-3057*	Double egress arm, LH
	63-3685*	Screw pack

*Finish required

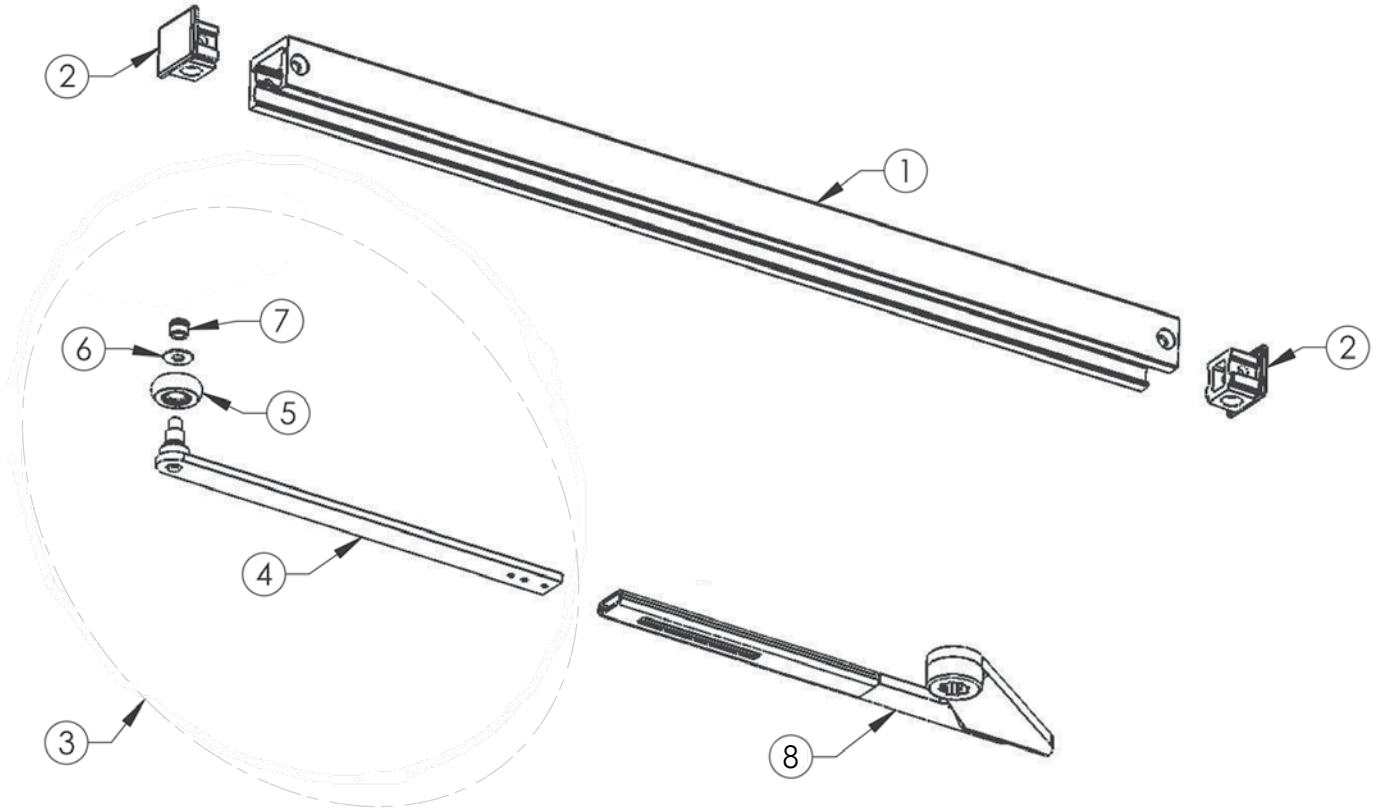

90902 10/25

The warranty on SARGENT® products becomes void if the product is modified in any way, regardless of whether the modification causes or contributes to any alleged defect. If a SARGENT product is modified it may no longer meet industry certification and quality control standards applicable to the original product and is no longer a genuine SARGENT product.

Copyright © 2019, 2025 Sargent Manufacturing Company, an ASSA ABLOY Group company. All rights reserved. Reproduction in whole or in part without the express written permission of Sargent Manufacturing Company is prohibited.

Experience a safer
and more open world

25- ODSB ARM AND TRACK ASSEMBLY
- USE WITH 351 SERIES DOOR CLOSER ONLY -

SARGENT
ASSA ABLOY

Item	Part No.	Description
	63-2706*	Channel Assembly (includes 1, 2, 9, 10)
1	63-0157*	Channel pull
2	63-0682*	End cap
3	63-4206*	Arm and roller assembly (includes 4, 5, 6, 7)
4	63-4276*	Arm and stud assembly
5		Roller assembly
6		Washer
7		Bushing
8	63-3056*	Double egress arm, RH
	63-3057*	Double egress arm, LH
9	63-0377	Bumper
10	63-0396	Bumper Stop
	63-3685*	Screw pack

*Finish required

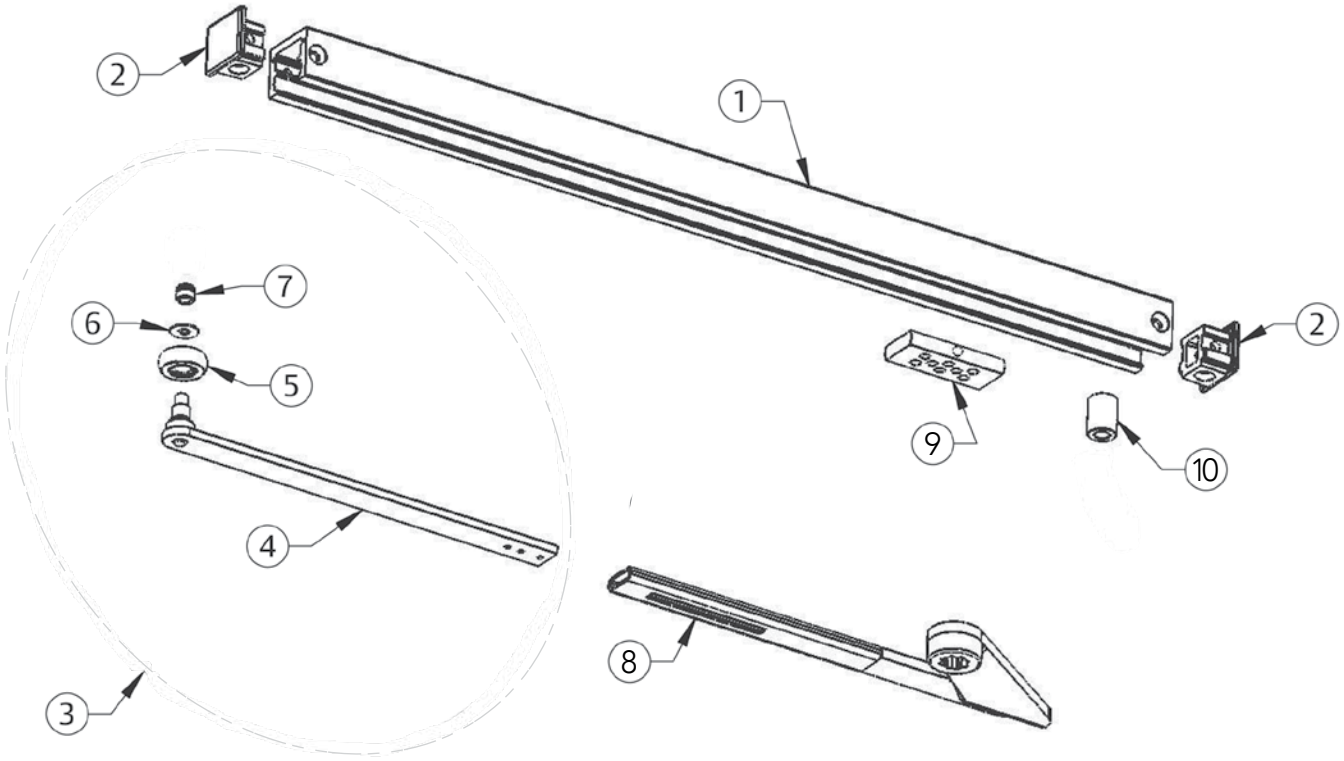

90902 10/25

Experience a safer
and more open world

The warranty on SARGENT® products becomes void if the product is modified in any way, regardless of whether the modification causes or contributes to any alleged defect. If a SARGENT product is modified it may no longer meet industry certification and quality control standards applicable to the original product and is no longer a genuine SARGENT product.

Copyright © 2019, 2025 Sargent Manufacturing Company, an ASSA ABLOY Group company. All rights reserved. Reproduction in whole or in part without the express written permission of Sargent Manufacturing Company is prohibited.

25- HDS ARM AND TRACK ASSEMBLY
- USE WITH 351 SERIES DOOR CLOSER ONLY -

SARGENT
ASSA ABLOY

Item	Part No.	Description
	63-2448*	Channel Assembly (includes 1, 2, 9, 10)
1	63-0157*	Channel pull
2	63-0682*	End cap
3	63-4206*	Arm and roller assembly (includes 4, 5, 6, 7)
4	63-4276*	Arm and stud assembly
5		Roller assembly
6		Washer
7		Bushing
8	63-3056*	Double egress arm, RH
	63-3057*	Double egress arm, LH
9	63-2063	Spring slide assembly
10	63-0678	Spring support
	63-3685*	Screw pack

*Finish required

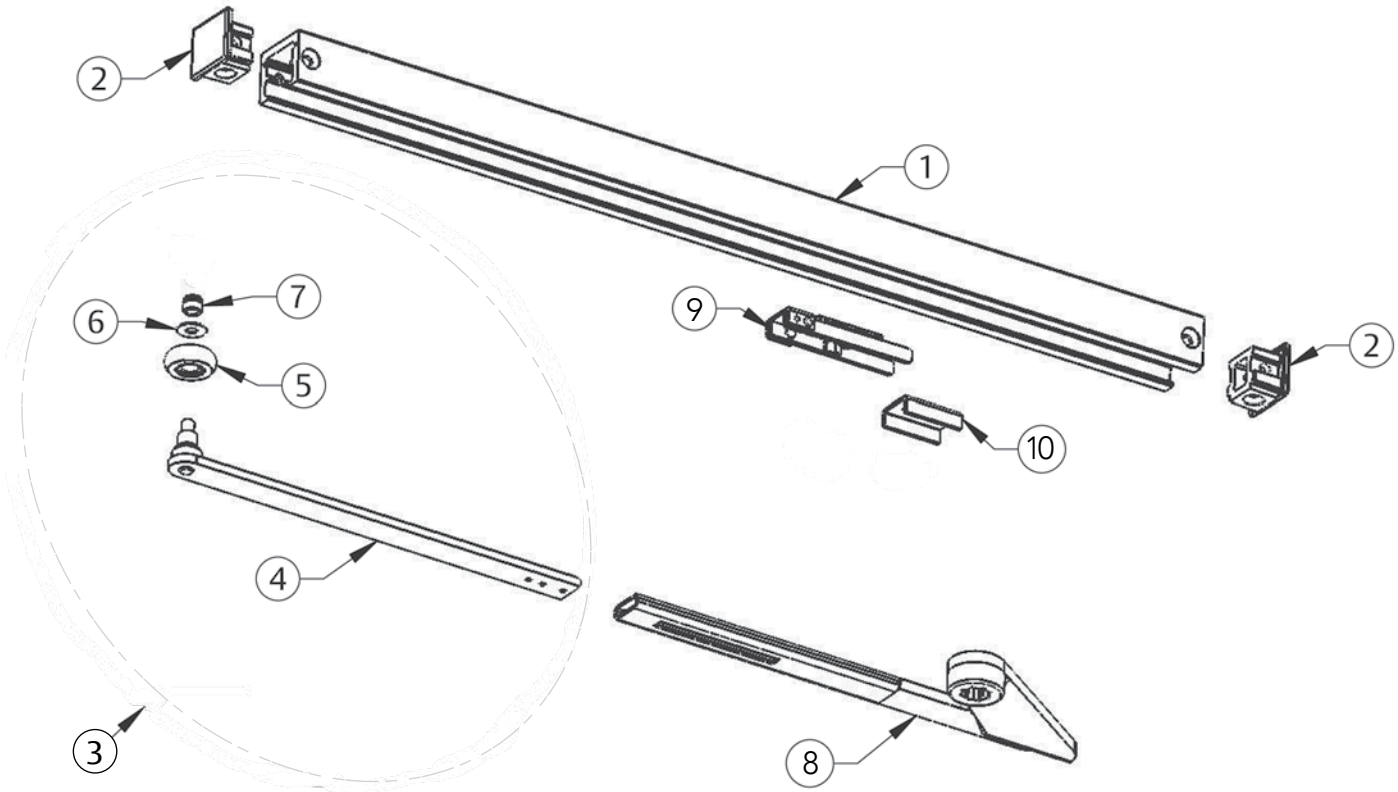

90902 10/25

The warranty on SARGENT® products becomes void if the product is modified in any way, regardless of whether the modification causes or contributes to any alleged defect. If a SARGENT product is modified it may no longer meet industry certification and quality control standards applicable to the original product and is no longer a genuine SARGENT product.

Copyright © 2019, 2025 Sargent Manufacturing Company, an ASSA ABLOY Group company. All rights reserved. Reproduction in whole or in part without the express written permission of Sargent Manufacturing Company is prohibited.

Experience a safer
and more open world

25- HDSB ARM AND TRACK ASSEMBLY
- USE WITH 351 SERIES DOOR CLOSER ONLY -

SARGENT
ASSA ABLOY

Item	Part No.	Description
	63-2707*	Channel Assembly (includes 1, 2, 9, 10, 11, 12)
1	63-0157*	Channel pull
2	63-0682*	End cap
3	63-4206*	Arm and roller assembly (includes 4, 5, 6, 7)
4	63-4276*	Arm and stud assembly
5		Roller assembly
6		Washer
7		Bushing
8	63-3056*	Double egress arm, RH
	63-3057*	Double egress arm, LH
9	63-2063	Spring slide assembly
10	63-0678	Spring support
11	63-0377	Bumper
12	63-0396	Bumper stop
	63-3685*	Screw pack

*Finish required

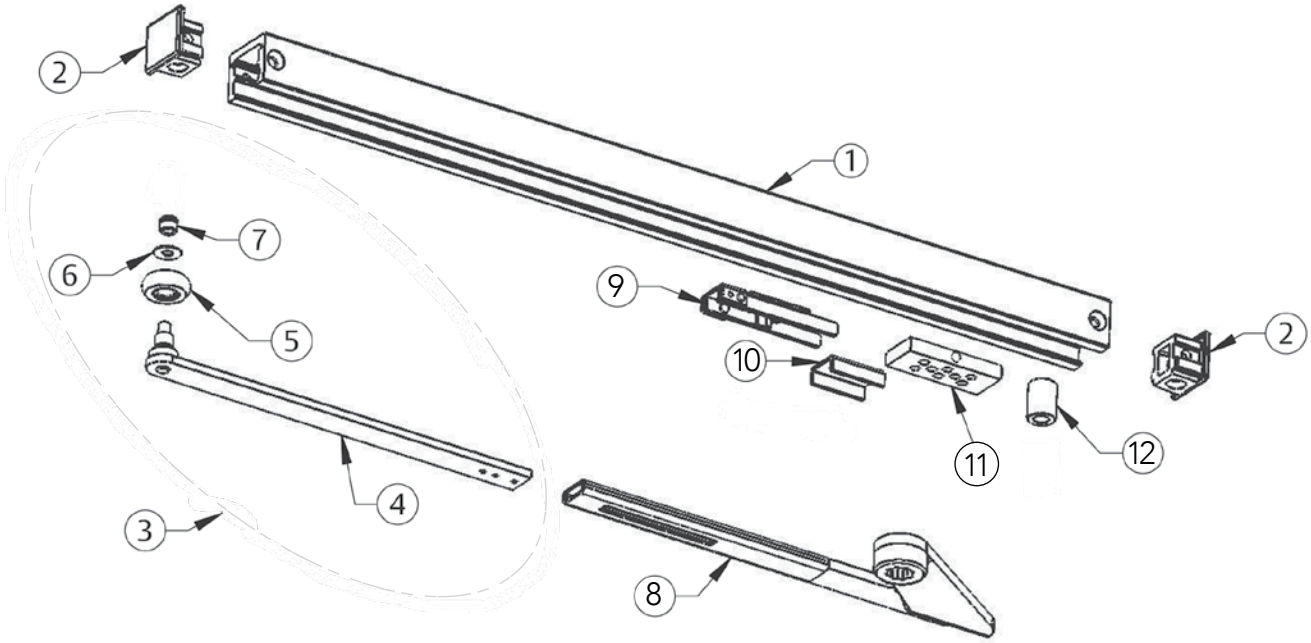

90902 10/25

Experience a safer
and more open world

The warranty on SARGENT® products becomes void if the product is modified in any way, regardless of whether the modification causes or contributes to any alleged defect. If a SARGENT product is modified it may no longer meet industry certification and quality control standards applicable to the original product and is no longer a genuine SARGENT product.

Copyright © 2019, 2025 Sargent Manufacturing Company, an ASSA ABLOY Group company. All rights reserved. Reproduction in whole or in part without the express written permission of Sargent Manufacturing Company is prohibited.

25-OTP POCKET APPLICATION
ARM & TRACK ASSEMBLY
- USE WITH 351 SERIES DOOR CLOSER ONLY -

SARGENT
ASSA ABLOY

Item	Part No.	Description
1	63-0156*	Channel, pull
2	63-0682*	End caps
3	63-3408*	Arm assembly
	63-4212*	Screw pack

*Finish required

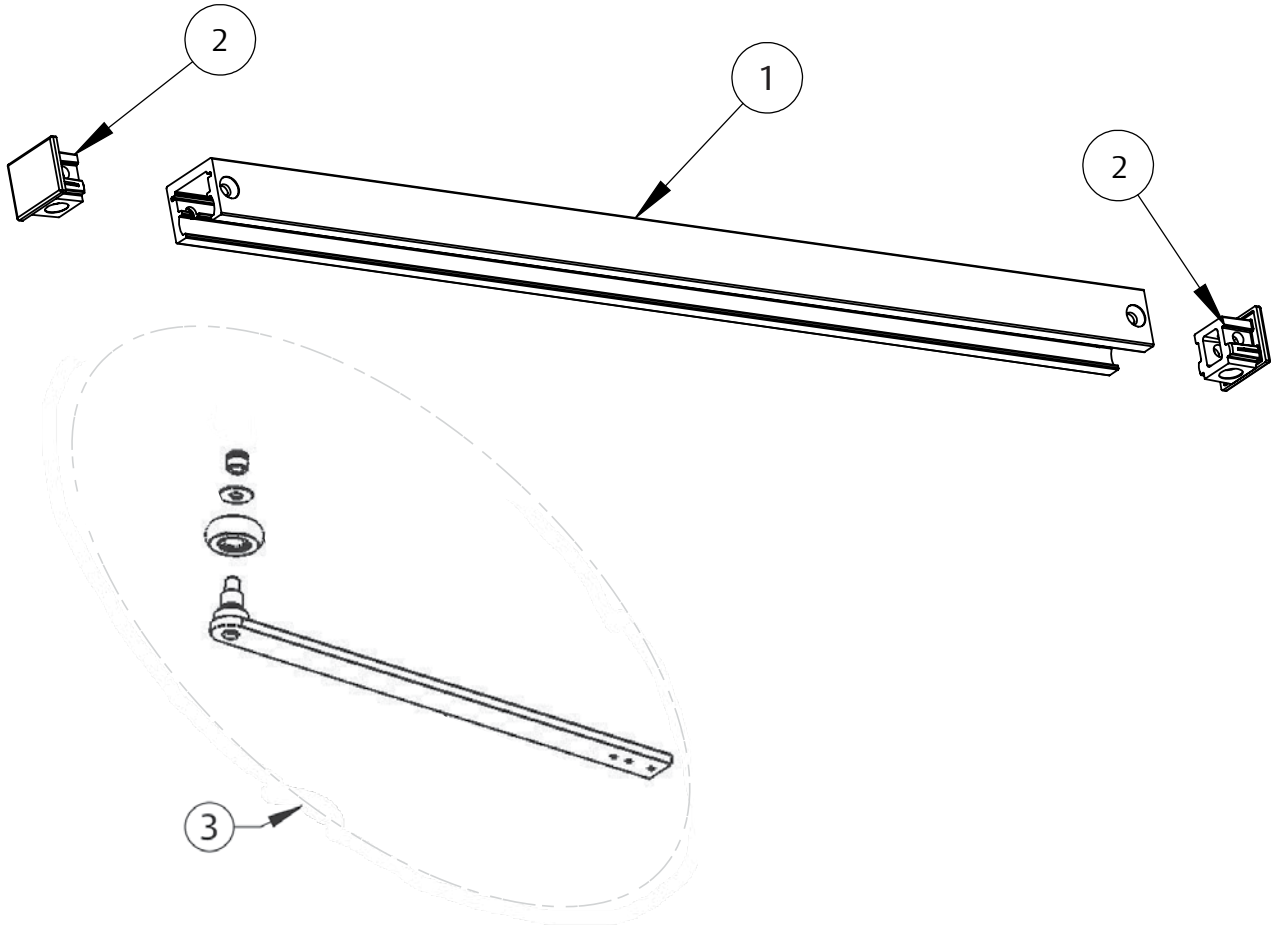

90902 10/25

The warranty on SARGENT® products becomes void if the product is modified in any way, regardless of whether the modification causes or contributes to any alleged defect. If a SARGENT product is modified it may no longer meet industry certification and quality control standards applicable to the original product and is no longer a genuine SARGENT product.

Copyright © 2019, 2025 Sargent Manufacturing Company, an ASSA ABLOY Group company. All rights reserved. Reproduction in whole or in part without the express written permission of Sargent Manufacturing Company is prohibited.

Experience a safer
and more open world

25-OP POCKET ARM ASSEMBLY
- USE WITH 351 SERIES DOOR CLOSER ONLY -

SARGENT
ASSA ABLOY

Item	Part No.	Description
1	63-2607*	Main Arm & Link Assembly
2	63-2216*	O foot assembly
3	61-0308*	Swivel Arm Screw
	63-2391*	Screw pack

*Finish required

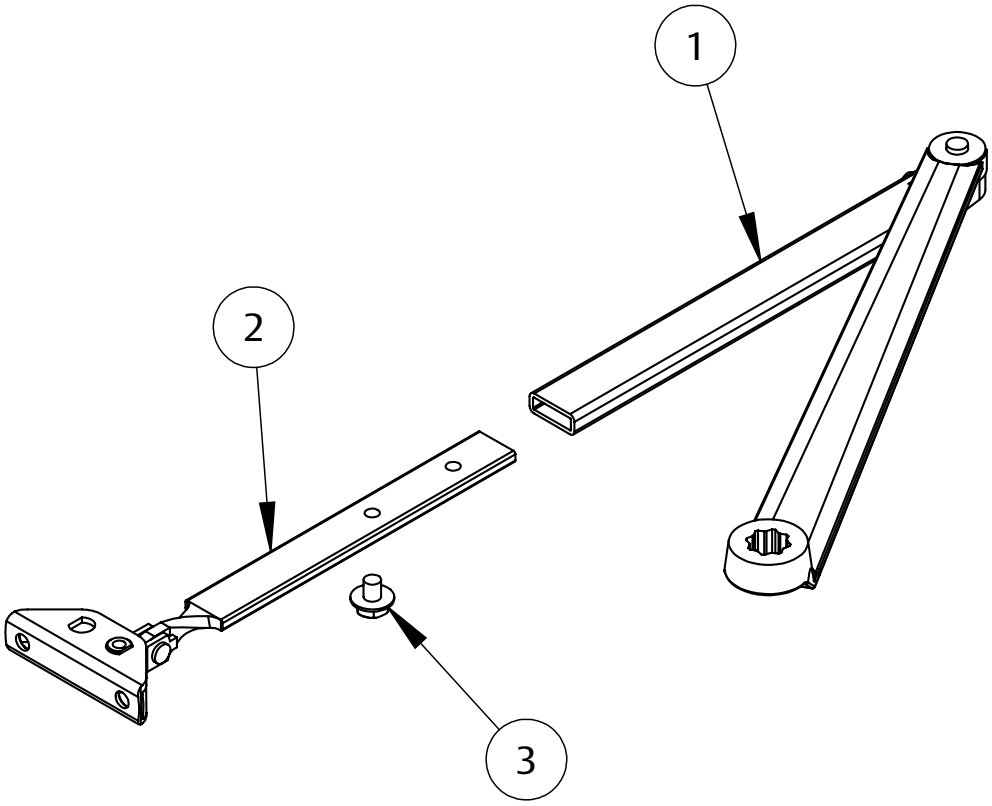

90902 10/25

Experience a safer
and more open world

The warranty on SARGENT® products becomes void if the product is modified in any way, regardless of whether the modification causes or contributes to any alleged defect. If a SARGENT product is modified it may no longer meet industry certification and quality control standards applicable to the original product and is no longer a genuine SARGENT product.

Copyright © 2019, 2025 Sargent Manufacturing Company, an ASSA ABLOY Group company. All rights reserved. Reproduction in whole or in part without the express written permission of Sargent Manufacturing Company is prohibited.

The ASSA ABLOY Group is the global leader in access solutions. Every day, we help billions of people experience a more open world.

ASSA ABLOY Opening Solutions leads the development within door openings and products for access solutions in homes, businesses and institutions. Our offering includes doors, frames, door and window hardware, mechanical and smart locks. access control and service.

SARGENT Manufacturing Company
100 Sargent Drive
New Haven, CT 06511 USA
800-727-5477
www.sargentlock.com

Founded in the early 1800s, SARGENT® is a market leader in locksets, cylinders, door closers, exit devices, electro-mechanical products and access control systems for new construction, renovation, and replacement applications. The company's customer base includes commercial construction, institutional, and industrial markets.

Copyright © 2019, 2025, SARGENT Manufacturing Company. All rights reserved. Reproduction in whole or in part without the express written permission of SARGENT Manufacturing Company is prohibited.
Patent pending and/or patent www.assaabloydss.com/patents.

90902 10/25