ASSA ABLOY has transitioned the formerly Yale Commercial brand to ASSA ABLOY ACCENTRA™. This affects only the brand name; the products and product numbers will remain unchanged.

791 STRIKE DETAIL

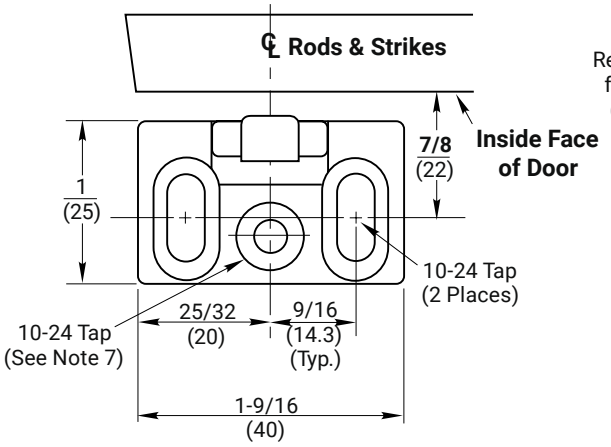

NOTES:
1. Do not scale drawing.
2. Dimensions are in inches (mm).
3. LHR door shown. Preparation is typical for both door hands.
4. Minimum door stile width: 4-1/2 (114).
5. Prepare mounting holes when installing the device.
6. Unreinforced frames require blind rivet nuts (by others) to mount the strike.
7. Thi s hole MUST be field located using physical part as template, after installation is complete and device is fully operational.
8. For recommended door reinforcements see template 7400-0000. Unreinforced doors require SNB option to mount the hardware.
9. Holes for optional SNB: 9/32 (7.00) dia., inside door face; 3/8 (9.50) dia., outside door face.
10. Provide door stiffeners, as needed to prevent door collapse due to installation with power tools, door use, or abuse.
11. Device mount to hinge stile (not shown) requires hole location and preparation during device installation.
12. For outside trim preparation see appropriate trim template.
13. Cutout, thru inside door face, only required when outside trim is used.

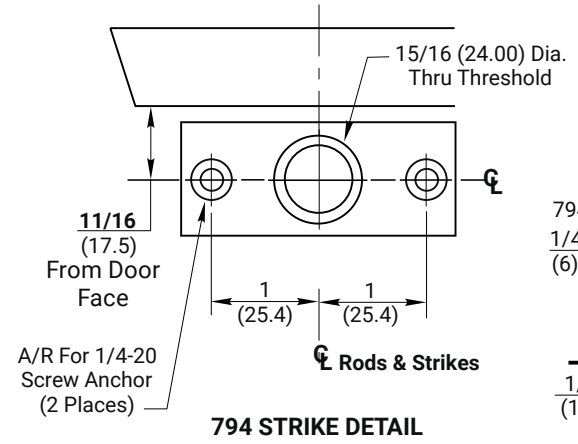

794 STRIKE DETAIL

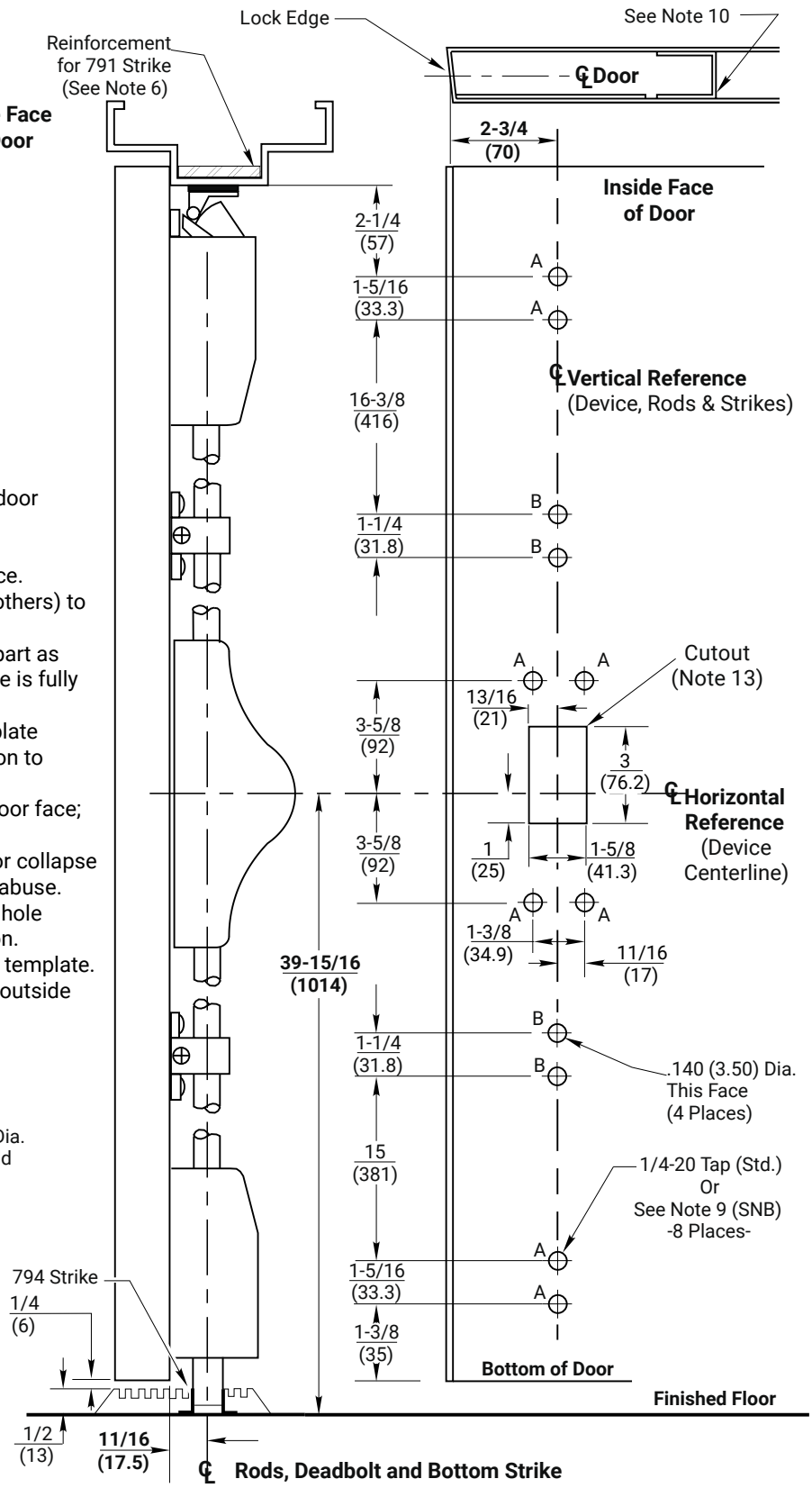

RESPONSIBILITY
DOOR AND FRAME MANUFACTURERS ARE RESPONSIBLE FOR PROVIDING ADEQUATE CONSTRUCTION OR REINFORCEMENTS FOR PROPER INSTALLATION OF HARDWARE SHOWN. ALL ARCHITECTURAL BUILDERS HARDWARE MUST BE INSTALLED ON PROPERLY REINFORCED DOORS AND FRAMES, REGARDLESS OF TYPE, MATERIAL, OR METHOD OF CONSTRUCTION.

1510 & 1510F Surface Vertical Rod Exit Devices

Application for Metal Door and Frame with Threshold and 794 Optional Strike

1-855-557-5078 Ext. 2
www.accentra-assaabloy.com

ACCENTRA
ASSA ABLOY

Experience a safer and more open world

Copyright © 1999, 2023, 2024, ASSA ABLOY Access and Egress Hardware Group, Inc. All rights reserved. Reproduction in whole or in part without the express written permission of ASSA ABLOY Access and Egress Hardware Group, Inc. is prohibited.

SUPERSEDES	8/99	DO NOT SCALE DRAWING
TEMPLATE NUMBER	SHEET	DATE
7415-0011	1 of 1	05/24