This product is now proudly being offered under the ASSA ABLOY ACCENTRA™ brand, effective June 20, 2023. Visit YaleCommercial.com/en/Today for support and information.

791 STRIKE DETAIL

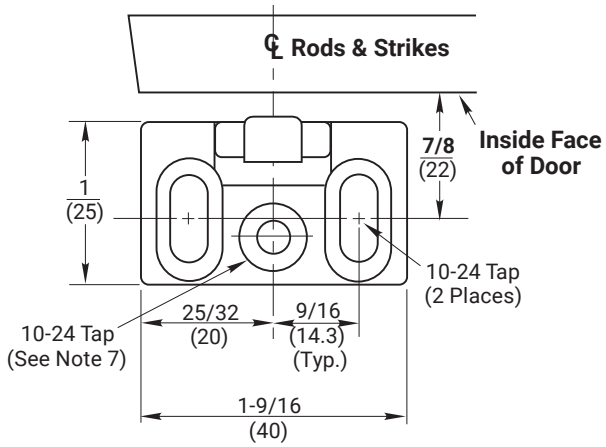

Notes:

1. Do not scale drawing.
2. Dimensions are in inches (mm).
3. LHR door shown. Preparation is typical for both door hands.
4. Minimum door stile width: 4-1/2 (114).
5. Prepare mounting holes when installing the device.
6. Unreinforced frames require blind rivet nuts (by others) to mount the strike.
7. This hole MUST be field located using physical part as template, after installation is complete and device is fully operational.
8. For outside trim preparation see appropriate trim template.
9. Provide adequate structural support to maintain door integrity after device installation with power tools, door use, or abuse.
10. Device mount to hinge stile (not shown) requires hole location and preparation during device installation. Door structural requirements are similar for both door stiles.
11. Wood screws #14 x 1-1/2" (by others) permitted for solid core wood doors if pilot holes are used for installation, when door label allows its use.

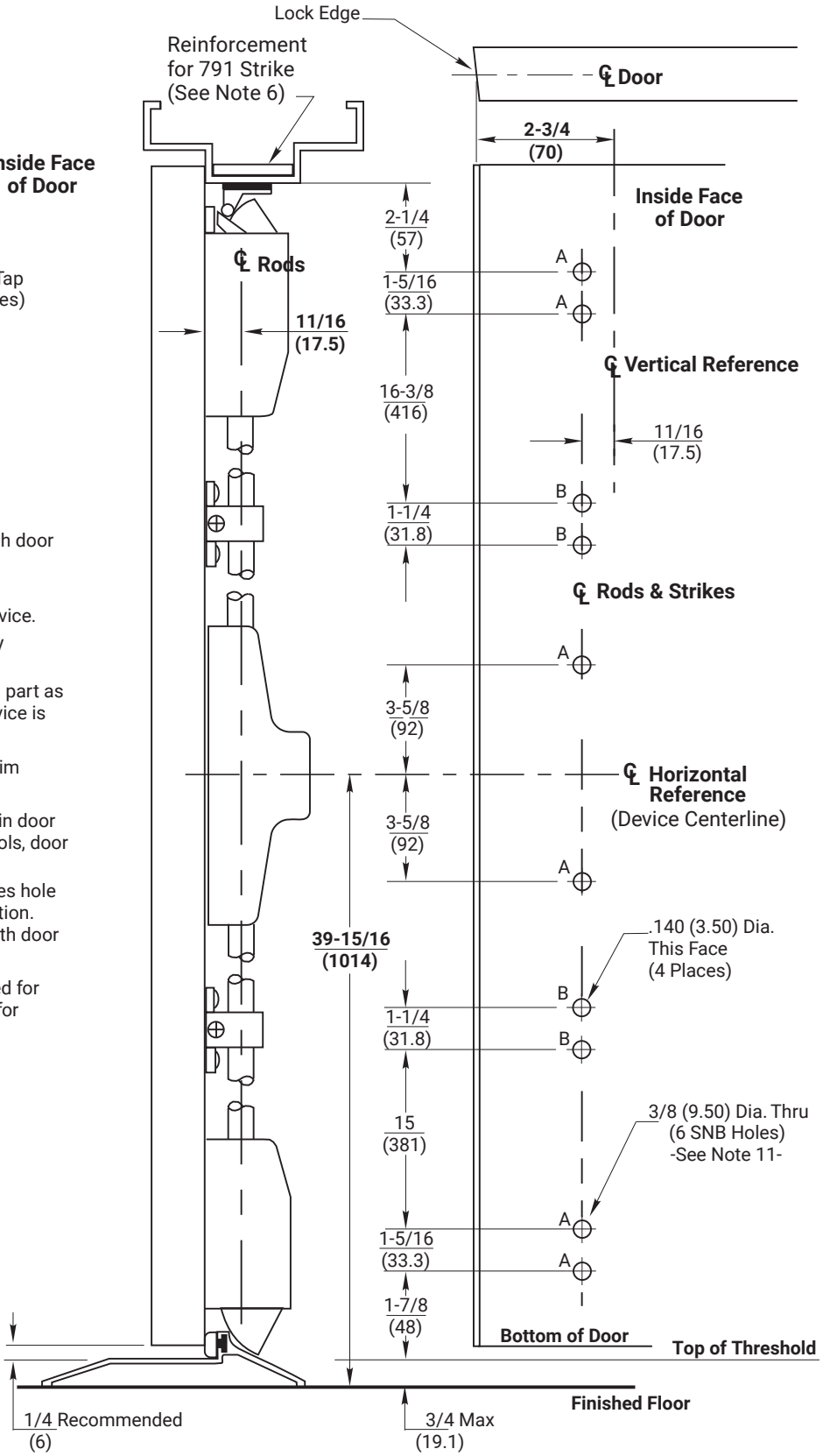

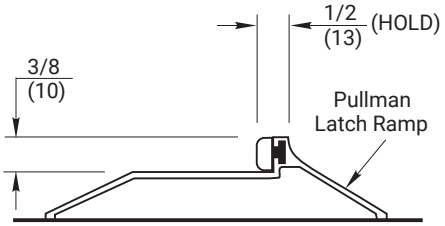

PANIC TYPE LATCHING THRESHOLD TYPICAL DETAIL

RESPONSIBILITY
DOOR AND FRAME MANUFACTURERS ARE RESPONSIBLE FOR PROVIDING ADEQUATE CONSTRUCTION OR REINFORCEMENTS FOR PROPER INSTALLATION OF HARDWARE SHOWN. ALL ARCHITECTURAL BUILDERS HARDWARE MUST BE INSTALLED ON PROPERLY REINFORCED DOORS AND FRAMES, REGARDLESS OF TYPE, MATERIAL, OR METHOD OF CONSTRUCTION.

2110 & 1810
Surface Vertical Rod Panic Exit Devices with Bottom Pullman Latch Option
Application for Wood or Composite Door, H.M. Frame with Latching Threshold and SNB
1-855-557-5078 Ext. 2
www.accentra-assaabloy.com

ACCENTRA
ASSA ABLOY

Experience a safer and more open world

Copyright © 2010, 2024, ASSA ABLOY ACCENTRA™ Access and Egress Hardware Group, Inc. All rights reserved. Reproduction in whole or in part without the express written permission of ASSA ABLOY Access and Egress Hardware Group, Inc. is prohibited.

SUPERSEDES	04/10	DO NOT SCALE DRAWING	
TEMPLATE NUMBER	SHEET	DATE	
7421-1016	1 of 1	04/24	