Architectural Door Accessories

ASSA ABLOY
Opening Solutions

Rockwood MSK-MS-DBL
Double Manual Strike for Medium Stile

Experience a safer and more open world

Template
MSK-MS-DBL

Effective date: October 1, 2020 | ***Supercedes:*** All Previous
NOTE: ASSA ABLOY reserves the right to make product changes and is not responsible for obsolete template errors. To ensure your template is current, please visit our website at www.assaabloydooraccessories.us or call us at 800-458-2424.

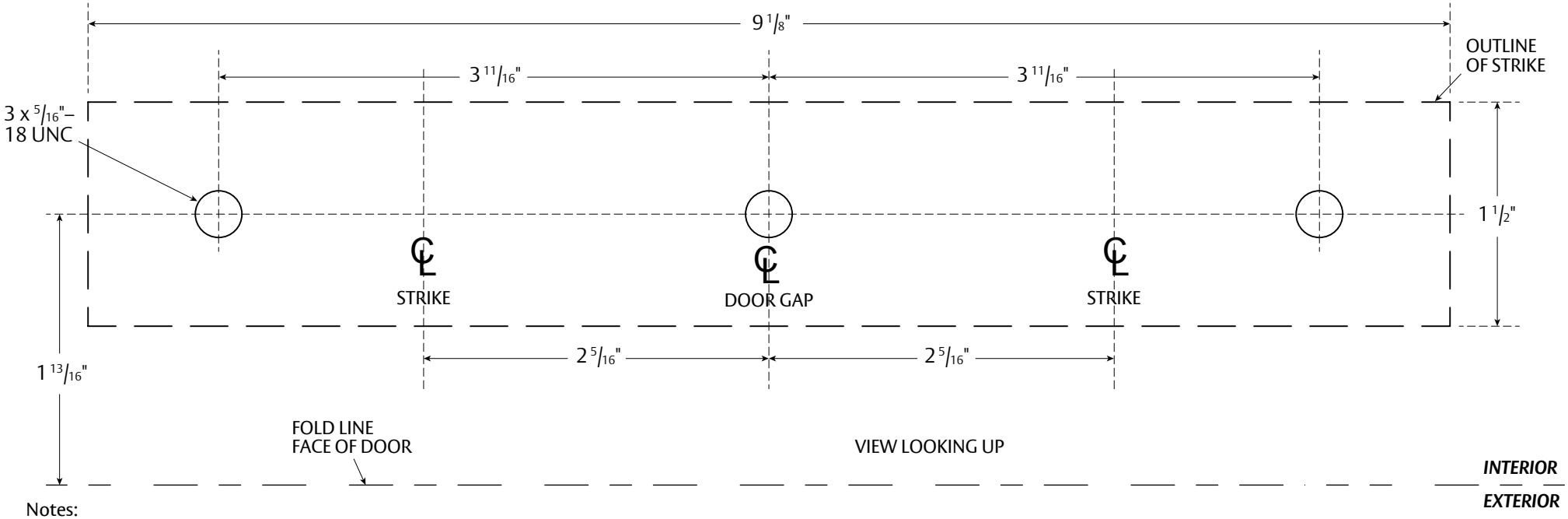

Notes:
1. Allowable distance from edge of door to centerline of strike is 2 1/4", consult factory if distance to centerline is different.
2. View is from bottom of header.
3. Prep shown is for medium stile storefront doors only, minimum stile width is 3 1/2".
4. Backing plate of 12 ga. min. required in header for strike installation.
5. 5/16-18 fasteners provided.

PRINT ON 11" X 8.5" PAPER OR LARGER AT 1:1 SCALE. VERIFY MEASUREMENTS AFTER PRINTING BEFORE USING THIS AS A TEMPLATE.

ASSA ABLOY Opening Solutions
Architectural Accessories Group
Rockwood, PA
P: 800-458-2424 • F: 800-922-9212
www.assaabloydooraccessories.us

Copyright © 2020-2021, ASSA ABLOY Accessories and Door Controls Group, Inc. All rights reserved. Reproduction in whole or in part without the express written permission of ASSA ABLOY Accessories and Door Controls Group, Inc. is prohibited.