PORTWEST

GARMENT MEASUREMENTS: E043

ISSUE DATE: 11/11/19

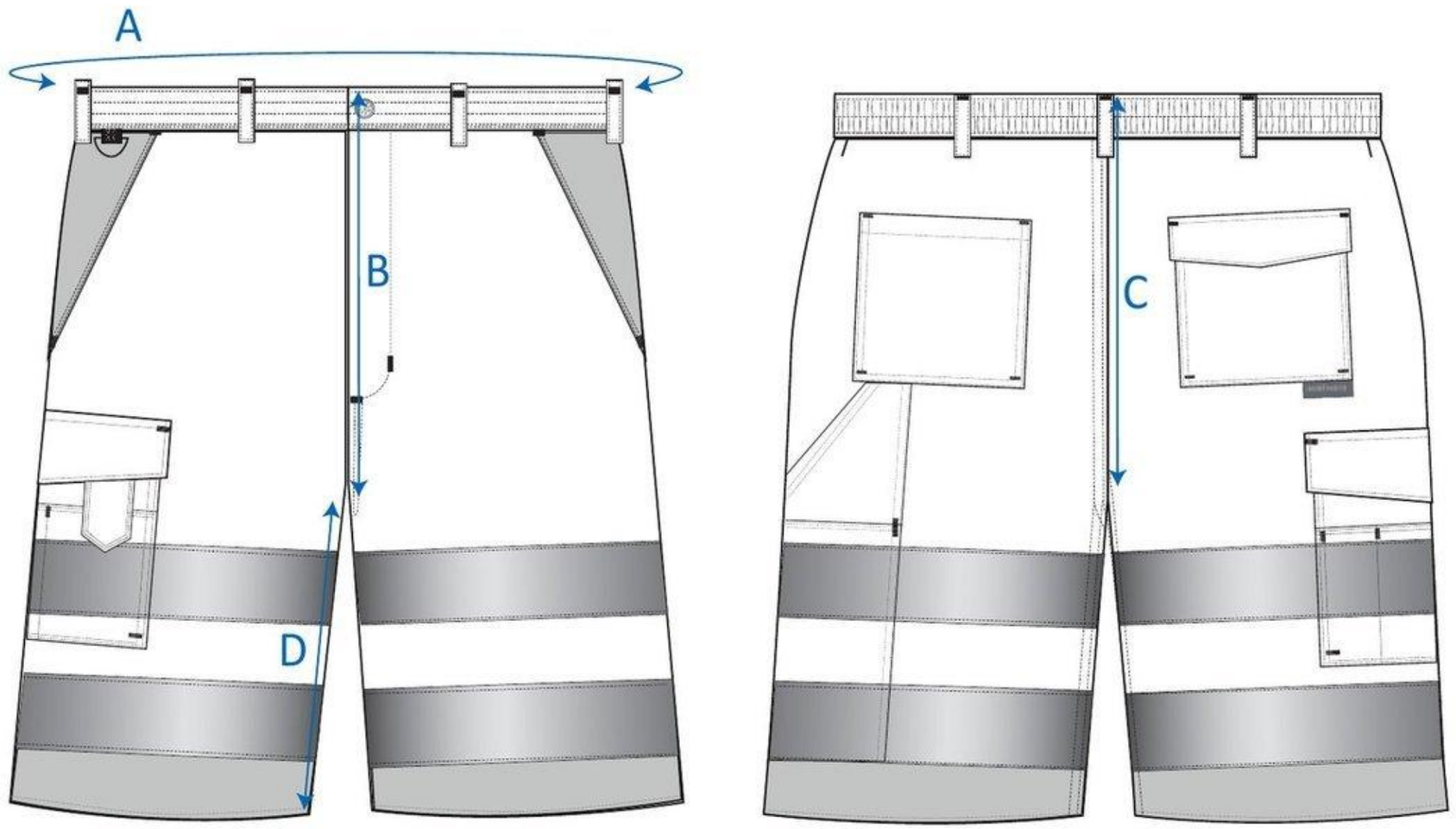

Measurements		XS	S	M	L	XL	2XL	3XL
		72	80	88	96	104	112	120
A	Waist Relaxed	64	72	80	88	96	104	112
B	Front Rise (incl. w/band)	30	31	32	33	34	35	36
C	Back Rise (incl. w/band)	37	38	39	40	41	42	43
D	Inside leg	28	28	28	28	29	29	29

PORTWEST

© COPYRIGHT AND PROTECTED: **PORTWEST LTD.**
WESTPORT BUSINESS AND TECHNOLOGY PARK, WESTPORT, CO MAYO, IRELAND