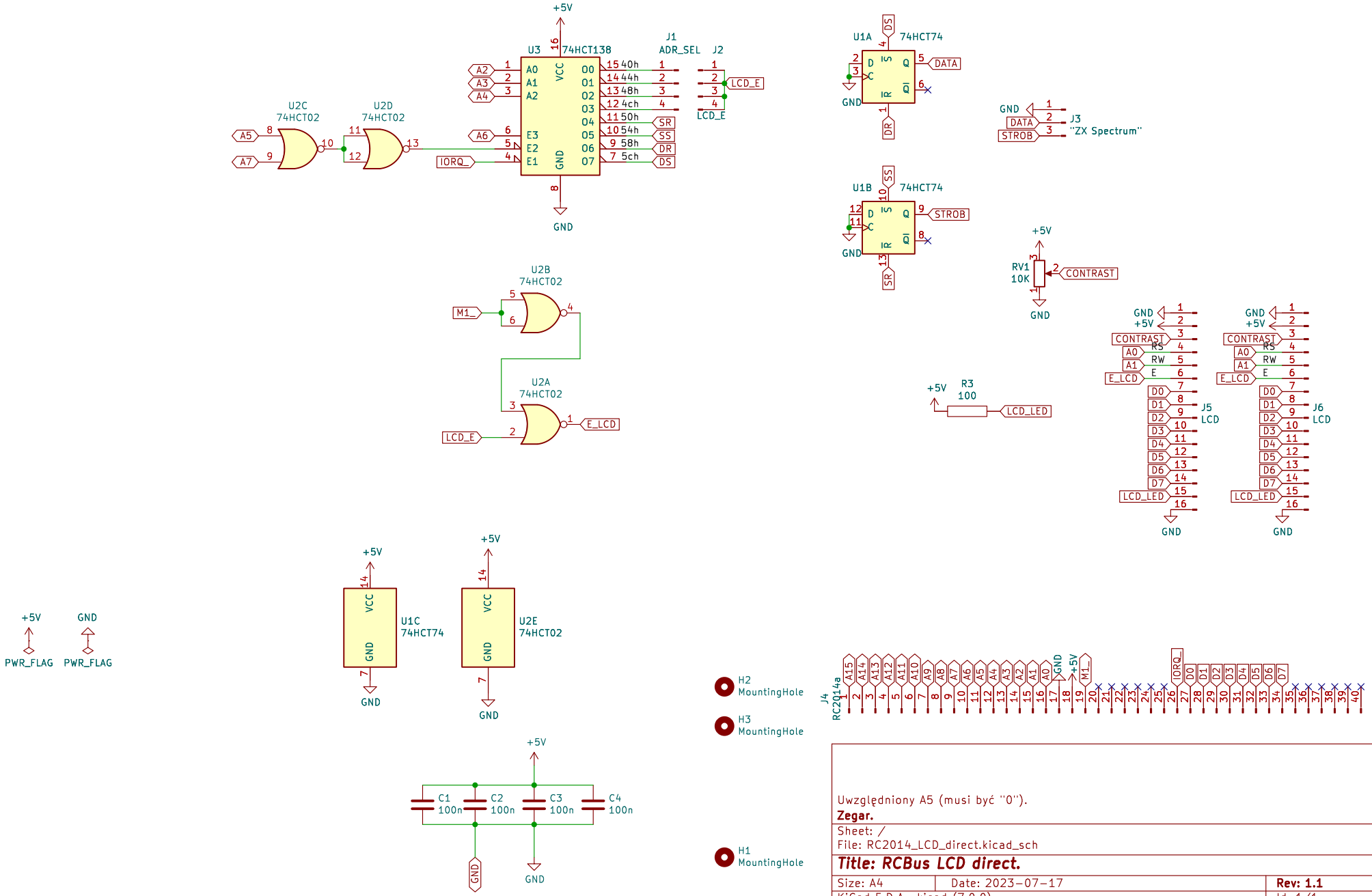

Uwzględniony A5 (musi być "0").

Zegar.

Sheet: /

File: RC2014_LCD_direct.kicad_sch

Title: RCBus LCD direct.

Size: A4	Date: 2023-07-17	**Rev: 1.1**
KiCad E.D.A. kicad (7.0.0)		Id: 1/1