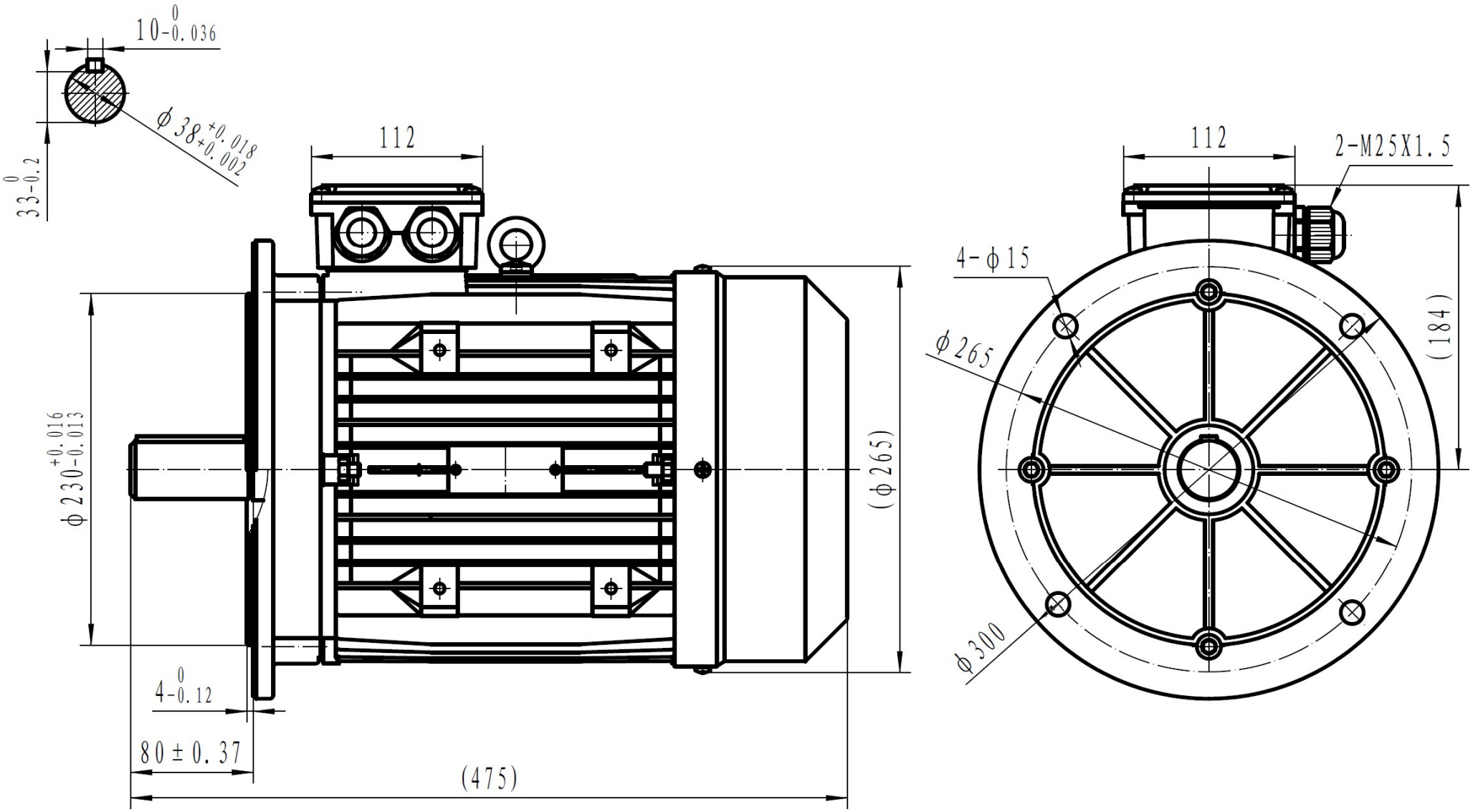
10-0.036 0
ϕ38+0.018 +0.002
33-0.2 0
112
ϕ230+0.016 -0.013
4-0.12 0
80±0.37
(475)
(ϕ265)
112
2-M25X1.5
4-ϕ15
ϕ265
(184)
ϕ300

MS 132M-4 B5