S I H Brackets Ltd.

DVD-022

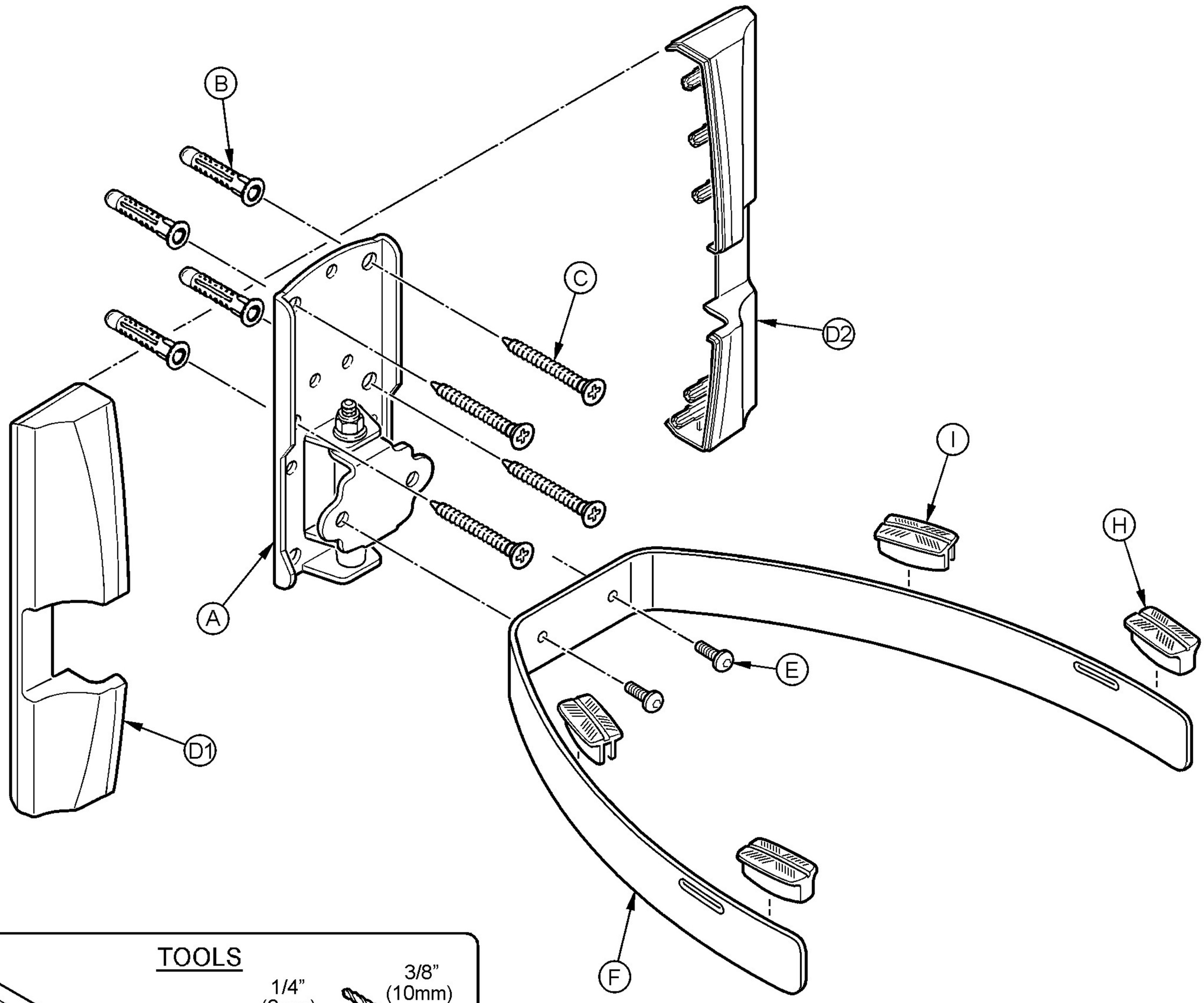

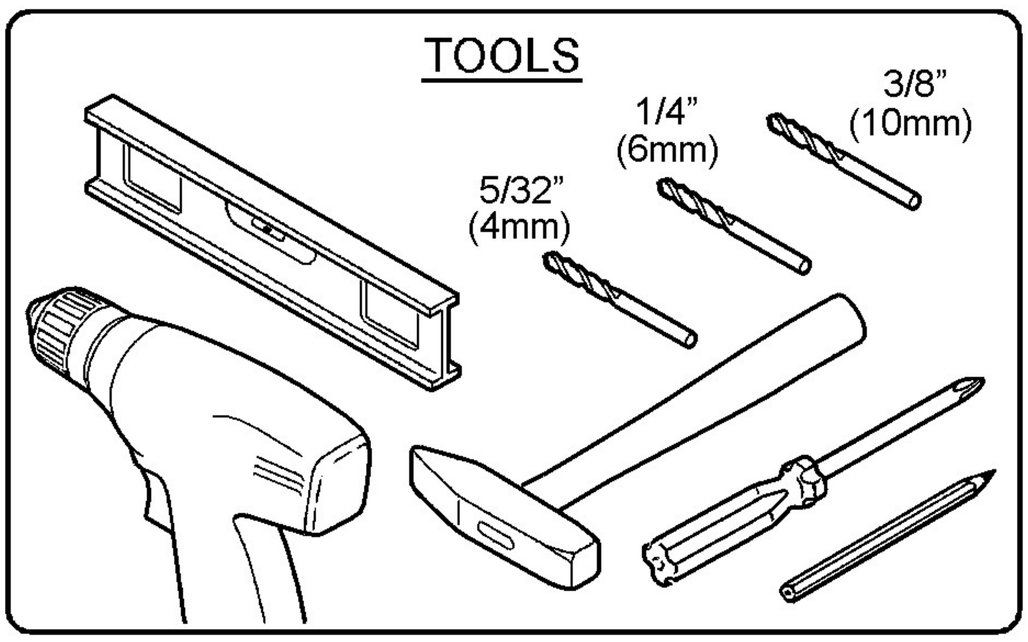

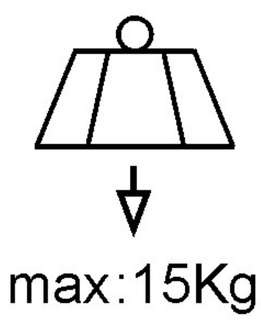

A	B	C	D1	D2	E
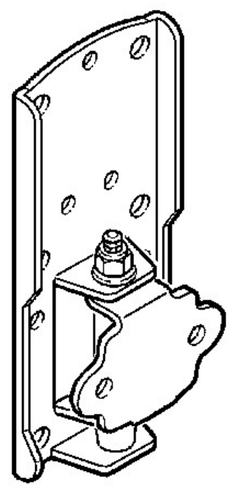 x1	x4	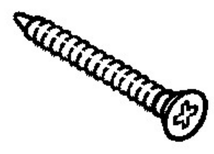 x4	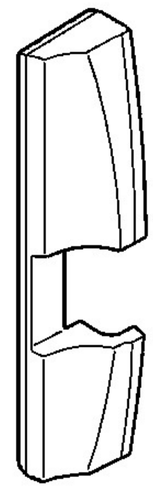 x1	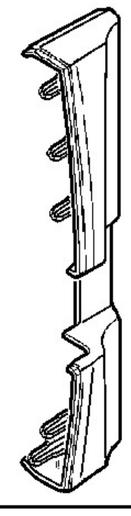 x1	x2

F	G	H	I	J
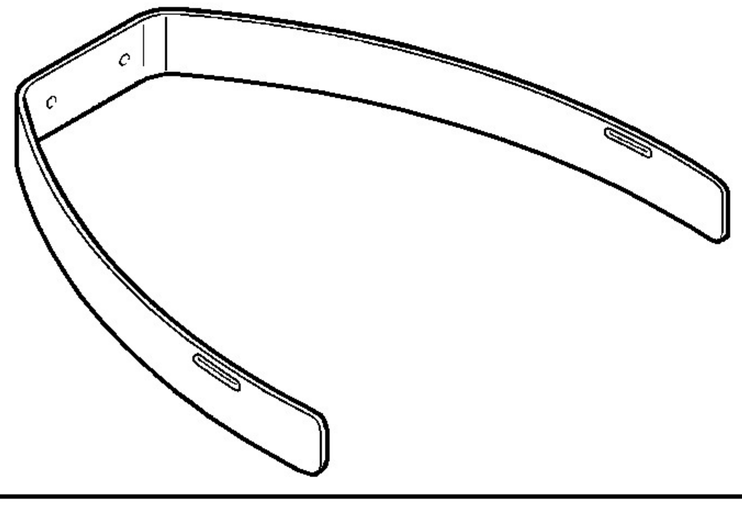 x1	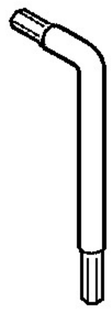 x1	x2	x2	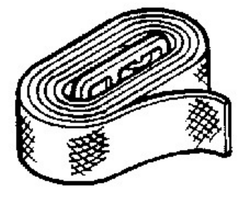 x1

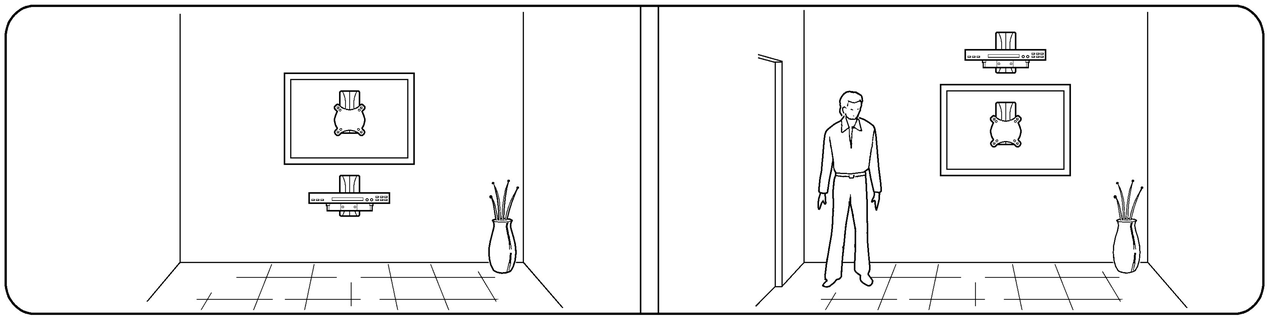

1

CONCRETE

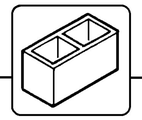

?

WOOD STUDS

1a

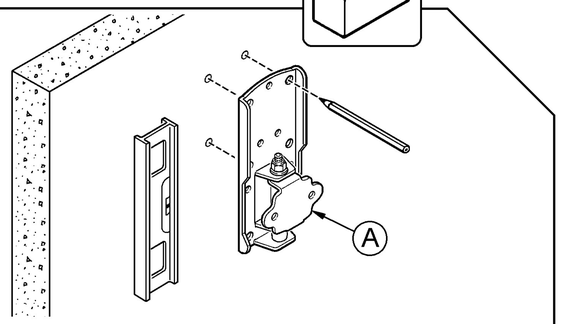

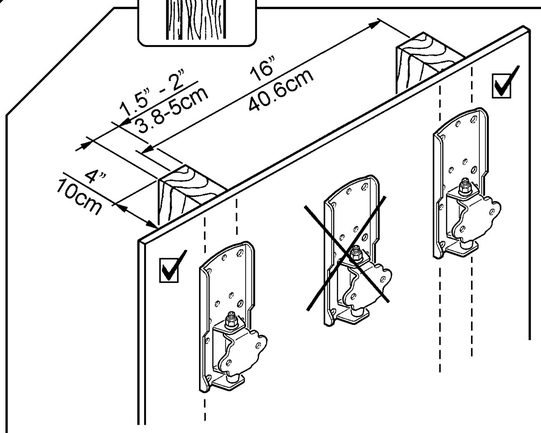

1b

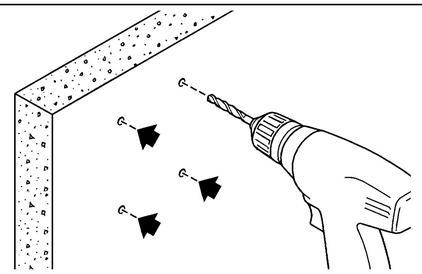

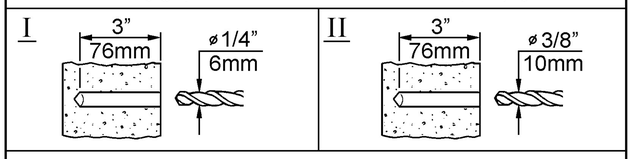

1a

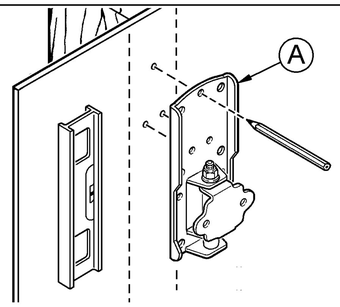

1b

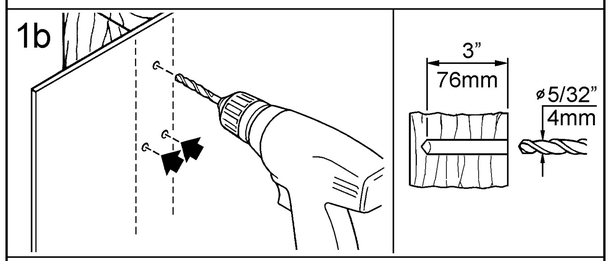

1c

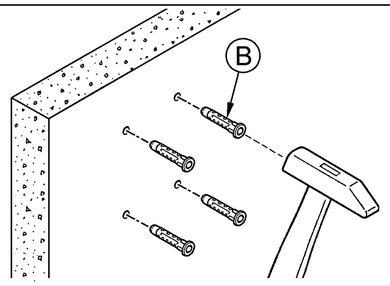

1d

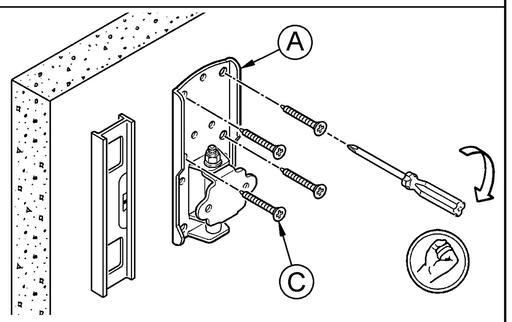

1c

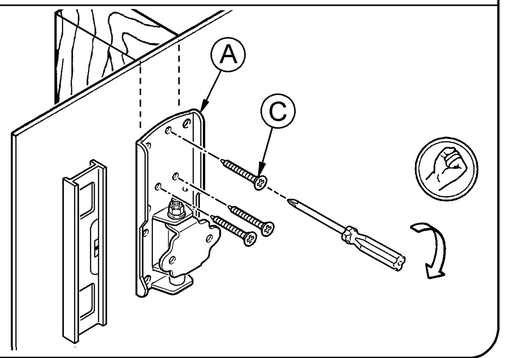

2

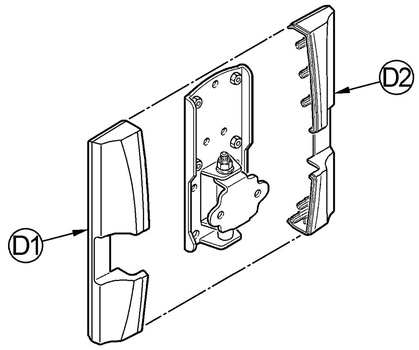

3

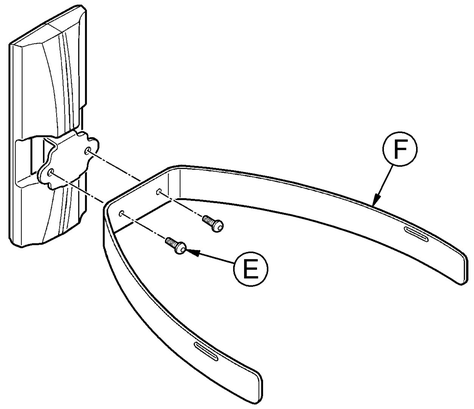

4

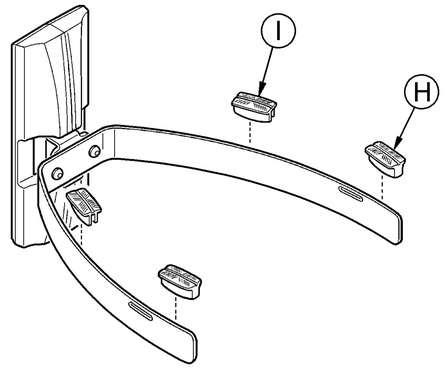
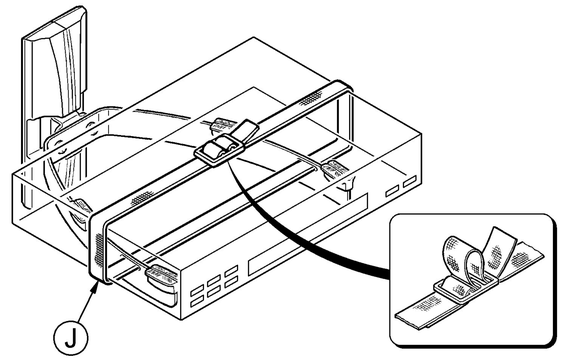
5