QS/SUS60 str.1
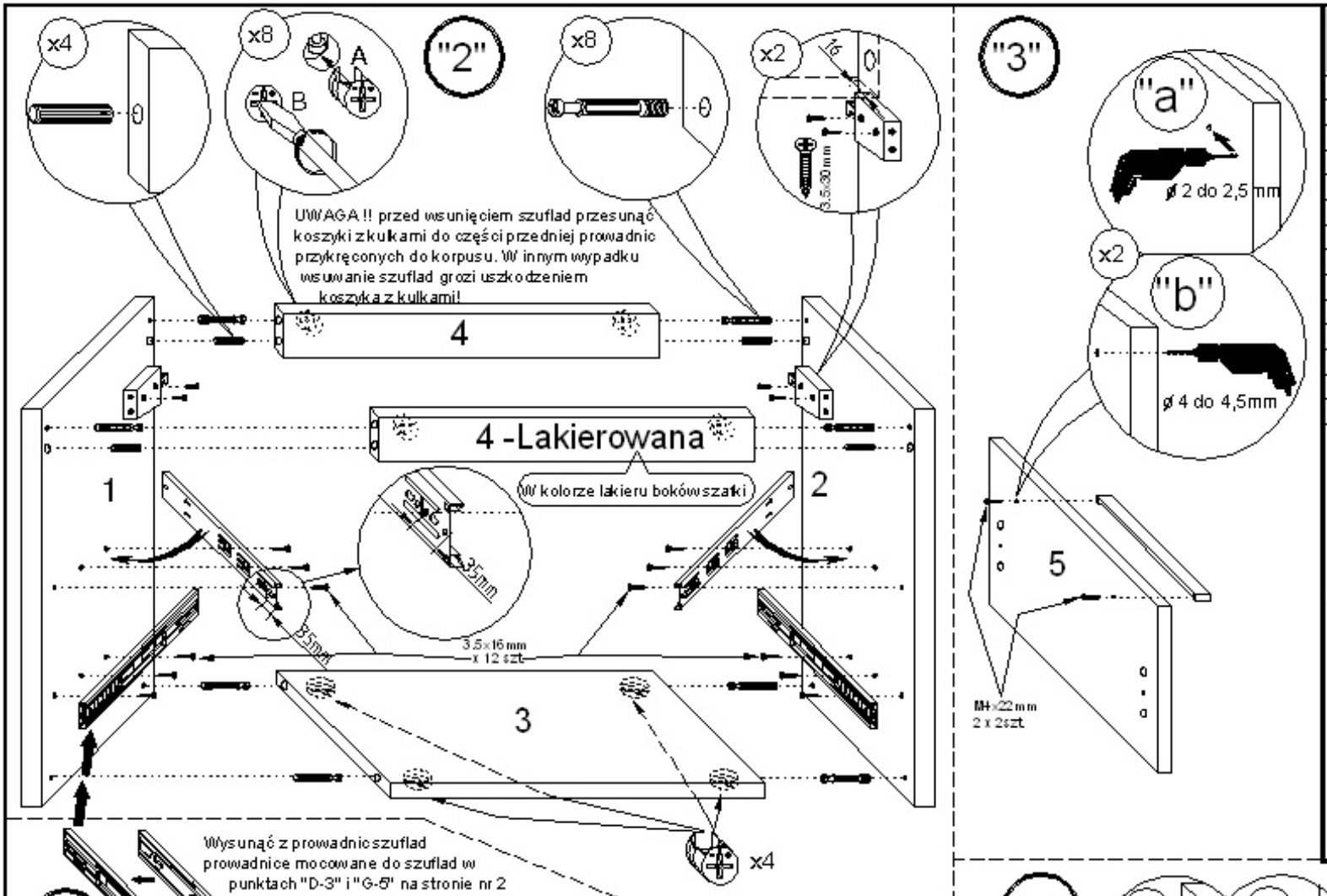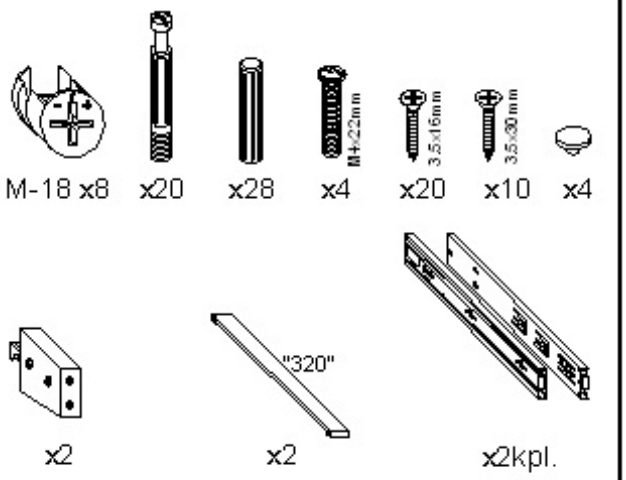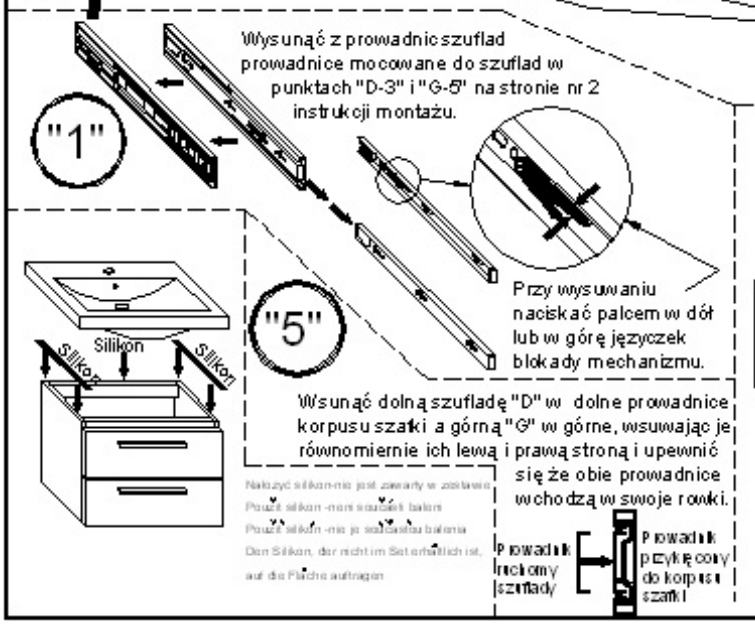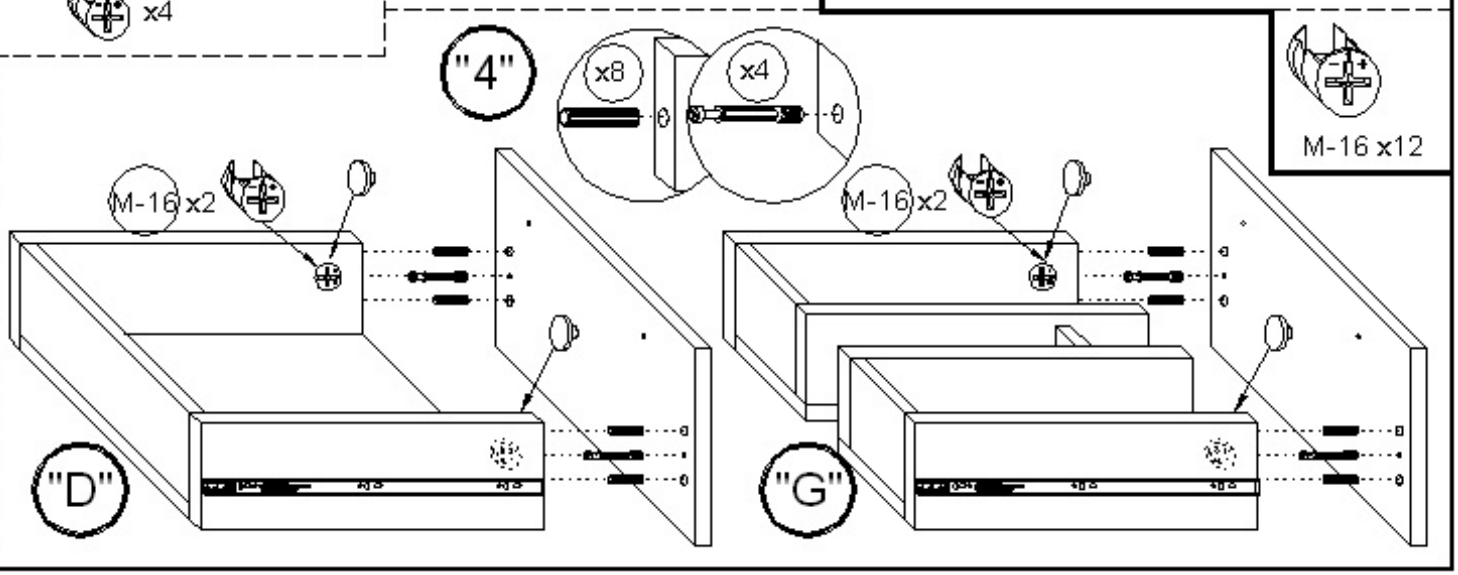
1	x1	516 x 370mm	
2	x1	516 x 370mm	
3	x1	562 x 369mm	
4	x2	562 x 60mm	
5	x2	236 x 594mm	
6	x1	504 x 349mm	
7	x1	504 x 349mm	z wycięciem
8	x2	350 x 130mm	Prawy
9	x2	350 x 130mm	Lewy
10	x1	350 x 112mm	Prawa
11	x1	350 x 112mm	Lewa
12	x1	504 x 112mm	
13	x1	110 x 102mm	
14	x2	181 x 112mm